DISTRICT OF COLUMBIA COURTS
Capital Projects and Facilities Management
Office: Gallery Place
616 H Street NW, 6th Floor
Washington, DC 20001
Mailing Address: 500 Indiana Avenue NW
Washington, DC 20001-2131

Cheryl R. Baily, Ph.D.
Acting Executive Officer

AMENDMENT NO. 008

TO:	**ALL PROSPECTIVE BIDDERS**
AMENDMENT ISSUE DATE:	**August 11, 2021**
SUBJECT:	**Solicitation No. DCSC-21-RFP-087** **Migration from Gallery Place Modernization**
PROPOSAL SUBMISSION DATE:	**Monday, August 30, 2021, by 3:00 pm, Eastern Time**

Question and Answers Round – 6

ALL OTHER TERMS AND CONDITIONS REMAIN UNCHANGED

One (1) copy of this amendment is being sent to all prospective Offerors. The prospective Offeror shall sign below and attach a signed copy of this amendment to each proposal to be submitted to the Courts in response to the subject solicitation or otherwise acknowledge this amendment with the signed offer as stated in the original solicitation documents. Proposals shall be delivered in accordance with the instructions provided in the original solicitation documents.

Geoffrey A. Mack

Geoffrey Mack
Contracting Officer

Acknowledgement of this Amendment, together with the Offeror's proposal, must be received by the District of Columbia Courts as stated in the solicitation no later than the closing date and time specified above for the receipt of proposals.

Failure by the Offeror to properly acknowledge receipt of this Amendment Number #8 may be cause for rejection of the proposal submitted by the Offeror in response to the subject solicitation.

This Amendment Number #08 is acknowledged and is considered a part of the proposal for Solicitation Number DCSC-21-RFP-087 Migration from Gallery Place Modernization.

_____ _____
Signature of Authorized Representative Date

_____
Name of Authorized Representative

_____
Title of Authorized Representative

_____
Name of Offeror

Please remember to check the DC Courts Website daily for posting of Amendment updates

https://www.dccourts.gov/about/procurement-contracts-branch

From:	Flor Rivera	**Q & A Round:**	6
Program:	Capital Project Facilities Management Division	**Date:**	August 11, 2021
Email:	maria.rivera@dccsystem.com	**Pages:**	13

cc:	Judith.Hill@dccsystem.gov	DC Courts
cc:	Clay.McKenna@dcsc.gov	AECOM
cc:	Richard.Moore@dcsc.gov	AECOM
cc:	Karl.Stewart@aecom.com	AECOM

This Document includes the following:

- Solicitation Questions & Answers Round: 06
- Attachment J.40 Interior Improvements to DC Superior Courts Building 'B' dated 2003
- Attachment K- Offer Breakdown Sheet.

SOLICITATION QUESTIONS & ANSWERS: ROUND 06

Q1. Should the possible bathroom upgrade be priced as an alternate?

A.1 Refer to section C.2.4.1 of the RFP. Verification of code requirements shall be included in the base bid. Should the D-B determine, based on verified code requirements during the pre-construction phase, that bathroom upgrades will be required to support the modernization of the space defined within the program, then Owner will address the additional work as an increase in scope.

Q.2 For DB projects where the architect is under contract to the general contractor, who fills out the PPQ sheet-the general contractor or the owner who the general contractor built the project for?

A.2 Refer to Answer #1 of Amendment 003. The client section past performance questionnaire for both the Contractor and the Architect/Engineer shall be completed by the Owner.

Q.3 Please confirm there are no small business or MBE/DBE requirements for this solicitation.

A.3 Confirmed. There are no small business or MBE/DBE requirements.

Q.4 Can the project look back period be extended to 8 years (vs. the 5 years in the solicitation)?

A.4 Remove: Section L.10.2.1 Basis of Evaluation

The basis of evaluation will include the quality and relevance of Past Performance of the Offeror/Builder and its Lead Design Firm on a variety of Design-Build projects for new construction, repair, and renovation, of general building construction that are similar in scope, size (project dollar value), type, and complexity to the project shown in the statement of work for this solicitation. Provide a minimum of three (3) and maximum of five (5) Design-Build past performance examples the offeror has completed in within the last five (5) years.

Replace with: Section L.10.2.1 Basis of Evaluation

The basis of evaluation will include the quality and relevance of Past Performance of the Offeror/Builder and its Lead Design Firm on a variety of Design-Build projects for new construction, repair, and renovation, of general building construction that are similar in scope, size (project dollar value), type, and complexity to the project shown in the statement of work for this solicitation. Provide a minimum of three (3) and maximum of five (5) Design-Build past performance examples the offeror has completed in within the last **eight (8) years**. At least one past performance example shall have been completed within the last five (5) years.

Q.5 The following questions relate to the MEP systems requirements in Bid Document J.33. While the rest of the RFP requirements indicate work to take place in specific areas of Building A and B, the J.33 narrative appears to indicate work requirements throughout the entirety of Buildings A and B. We are requesting a clarification of the extent of work for specific building MEP systems outside of the defined program areas of Building A and B. Please advise.

A.5 The scope of work in Building B is inclusive of building system upgrades included in the J.33 Performance Requirements narrative to meet the indicated performance requirements. MEP systems that support the defined program areas of Building B are included in the scope of work. The building A scope of work is within the defined program area only. No additional building systems work is anticipated. Should the D-B determine during the pre-construction phase that building systems work will be required to support the modernization of the space defined within the program, then Owner will address the additional work as an increase in scope.

Q.6 The title description of the J.33 Performance Requirements indicates "1.2 BUILDING B (510 4th) - Includes Building A (515 5th) Tenant Improvement Requirements". Please advise if the intent is for ALL of the systems replacements/upgrades in this J.33 attachment are to be duplicated in both Buildings - or - if the intent is to duplicate the work in Building A for those specific paragraphs that reference Building A.

A.6 System replacements and upgrades indicated in attachment J.33 are applicable to Building B unless specifically noted as Building A.

Q.7 C2.4.1 -4th Paragraph; refers to toilet modifications or adding toilets that may be required pending D-B team code review. Please advise if the work of providing additional fixtures and toilet room revisions (if required to meet current code) is to be part of the base RFP scope of work.

A.7 Refer to Question 1 above.

Q.8 1.2.1.2 para 2 indicates the new equipment to be provided and that the existing hot water pumps are to remain. Do these existing pumps have sufficient capacity (flow/head) to service the renovation?

A.8 Heating hot water pumps may remain due to acceptable age and condition. Pump capacity must be verified by the Design-Builder per new heating hot water system and equipment requirements as part of the base RFP scope of work.

Q.9 1.2.1.2 para 3 says - "Replace all remaining steam finned tube radiators (FTR) with heating hot water FTR's" - Please confirm that this replacement is limited to the specific work areas of Building A and B. If not, please advise on number and location of the replacements required if outside of the specific RFP work areas.

A.9 Replacement of all remaining steam FTRs with HHW FTRs applies to Building B in only areas where modernization is occurring. FTR shall not be replaced in occupied building areas

Restrooms, stairwells, penthouse spaces, and vestibules include steam FTRs. This requirement does not apply to Building A.

Q.10 1.2.1.2 The scope includes putting the hot water system on emergency power, including controllers and actuators. Does this include the terminal finned tube radiators control valves and associated controls?

A.10 No.

Q.11 1.2.1.3 Para 5 of this section requires "Provide new chilled water piping and accessories…" Please confirm that this new piping is limited to the central plant work associated with the provision of new chillers and that replacement of the branch distribution piping is not required.

A.11 Confirmed. New chilled water piping is limited to the central plant work. Branch distribution piping to AHU chilled water coils is not included.

Q.12 1.2.1.3 The document states that new chillers, new cooling towers, and new water pumps. Has a test fit been done as part of the bridging effort to confirm that these new components will fit in the existing designated space?

A.12 No, a test fit has not been done. Equipment layouts shall be determined by the D-B during the Preconstruction Phase. Refer to Section C.4.4.1 for details.

Q.13 1.2.1.3 - The scope includes performing a payback study for water-side economizer and include the heat exchanger design/installation if the studies justifies the cost. Since this won't be known until the study is complete, (during the design phase), should the design cost for the new system (if required) be a separate design cost change and not part of the base RFP bid?

A.13 No, the design cost associated with the water-side economizer and heat exchanger design shall be included in the base bid. Indicate associated cost breakout on attachment K, tab K.1.

Q.14 1.2.1.4 - Para 2 says - "Provide energy code-compliant insulation on supply air ductwork from (6) air handling units located in basement and penthouse mechanical rooms." Please clarify the extent of the insulation work required. Is it limited to the rooms where the air handlers are located or is the intent to provide new insulation on all areas fed by these units, even in areas outside of the specific work areas of the RFP?

A.14 Provide insulation on supply ductwork in rooms where air handlers are located. The intent is to install supply ductwork insulation in major areas of work, including mechanical spaces and specific work areas identified in the RFP. Occupied areas outside the scope of renovation are not included.

Q.15 1.2.1.4 Please provide an indication of the anticipated / budgeted quantity of flexible duct upgrades to medium pressure hard duct connections? Again - is the intent to limit this replacement to the specific work areas of the RFP, or is it required throughout the building?

A.15 In the case of converting flexible duct to rigid duct at fan powered box inlets, the intent is to perform the replacement for the full building including areas outside of the renovation scope. Flexible duct at fan powered box inlets are prone to failure and shall be replaced throughout. It is estimated that 90% of fan powered boxes in Building B are installed in this condition.

Q.16 1.2.1.4 -Para 4 - regarding the attic hot water heating and ventilating air handling unit - Is it desired to have a H&V unit or simply hot water unit heaters in order to maintain the attic minimum temperature?

A.16 The requirement is to provide a heating and ventilating (H&V) unit. Should the D-B determine during the preconstruction phase that a different approach is more beneficial to the Owner, then the D-B shall bring that to the Owner's attention for consideration.

Q.17 1.2.1.5 Is a new BAS required for Bldg A as well as Bldg B?

A.17 No. Major system replacements, such as the BAS replacement, apply to Building B only.

Q.18 1.2.1.5 For area of the bldg(s) that are not under the scope of work; are the existing HVAC terminals to be converted to this new BAS under this scope of work?

A.18 Existing terminal unit controllers are DDC-type. The requirement is to connect the existing HVAC terminals for the entire building, including areas within and outside of the areas of work. Design-Builder shall verify that HVAC terminals can be connected to the new BAS without replacement during the pre-Construction Phase and included in design accordingly.

Q.19 1.2.1.5 - Confirm that the utility meters (natural gas, water, electric) are existing that need to be connected to the BAS or are they new and to be provided under the scope of this project?

A.19 Utility meters are currently not connected to the BAS, and it is unknown if existing meters are compatible with BAS monitoring. D-B shall assume the provision of new meters as part of the base RFP scope.

Q.20 1.2.1.6 - Para 3 indicates two design options for FTR+VAV or VAV only. Please confirm that this selection will be decided at the initial phase of the project and that the intent is NOT to provide full CD level documentation of both options.

A.20 Confirmed.

Q.21 1.2.2.2 - Provide information regarding the extent of the sanitary waste and vent piping that needs to be replaced under the scope of this project. Will this impact any currently occupied / functioning areas?

A.21 The sanitary waste/vent piping replacement scope applies to the specific work areas identified in the RFP. Any riser connections to the work area are included in the scope of work. Work should only impact occupied functioning areas if it is necessary to provide a fully functioning system within the work areas.

Q.22 1.2.2.2 - when the gas service and gas regulator is installed, will it require direct access for Washington Gas to service new system as is usual per code.

A.22 Yes.

Q.23 1.2.2.2 - the historic drinking fountains don't meet ADA or ABAAS criteria. The restoration of drinking fountains to be fully functional will also trigger the requirement that they are fully accessible. Recommendation is accessible fountains be added to the scope in addition to the restored fountains. Please advise.

A.23 The Design-Builder shall determine during the Pre-Construction phase if additional water fountains are required, existing fountains need to be modified, and/or historic fountains need to be restored to meet code. The Courts' will adhere to the D-B's approved Design Submission Schedule and provide a decision on the timeline required for inclusion in the design.

Q.24 1.2.3.2 para 1 indicates "20 percent spare load growth at 100 percent demand will be provided throughout the electrical system)" Please advise if this is applicable to the entirety of Buildings A and B or is limited to the specific work areas of the RFP.

A.24 This requirement is applicable to all new work that would occur within the specific work areas of the RFP.

Q.25 1.2.3.3 para 1 - Please identify which equipment to be relocated. Again, is this limited to the specific work areas of the RFP or is it for the entirety of Buildings A and B?

A.25 The requirement is to relocate all equipment, within the specific work areas of the RFP only, that is violating working clearance or dedicated space requirements.

Q.26 1.2.3.4 Is acceptable that the new generator be provided with belly tank and not a separate fuel oil storage / circulation system

A.26 The fuel tank shall be sized to satisfy NFPA 110 and codes listed in section 1.2.3.1 for new generator rating.

Q.27 1.2.3.4 Confirm that the new generator is for Bldg B only.

A.27 Confirmed for Building B only.

Q.28 1.2.3.4 para 2 - please advise on the specifics of the Optional Standby loads and requirements of the DC Courts.

A.28 Design-Builder shall verify loads requiring generator backup, but not permitted to be served or connected to emergency and legally required energy distribution. D-B shall provide load calculations for standby distribution and new generator ratings and detail impacts to major systems/equipment, to determine the optimal design.

Q.29 1.2.3.4 Does the replacement of the generator to meet all load requirements and current standards fit within the confines of the current room?

A.29 D-B shall determine generator rating required for code compliant supply of emergency, legally required, and standby supply to new and existing loads. New loads include but are not limited to, fire pump and optional standby distribution. Design-Builder shall evaluate new generator requirements to determine suitability of existing generator room for code compliance.

Q.30 1.2.3.5 Electrical Metering- please confirm that the metering system requirements are limited to the specific work areas of the RFP.

A.30 D-B shall provide new metering for areas of work and new systems installed by D-B, which may be located outside of the specific areas of work.

Q.31 1.2.3.11 - Interior Lighting Confirm that the light replacement (LED) is only for the spaces under the scope of this project and not the balance of the bldgs A and B.

A.31 Confirmed.

Q.32 1.2.3.12 - Interior Lighting Controls - Confirm that the lighting controls are for the areas of the building that are associated with the scope of work and not the complete / balance of the buildings.

A.32 Confirmed.

Q.33 1.2.3.13 Ext Lighting Controls - Please clarify the scope of work / extent for exterior lighting upgrades/replacements and associated controls. Is this part of the scope of work for this project?

A.33 No. Exterior lighting controls are not part of the scope of work.

Q.34 Will this project be required to achieve any LEED certification or other sustainability certifications?

A.34 No.

Q.35 1.2.4.1 Please confirm that modifications to the existing fire alarm system are only related to the specific work areas of the RFP. Confirm that the intent is not to upgrade the entirety of the system throughout buildings A and B to meet the referenced code requirements.

A.35 New, replacement, and relocated fire alarm devices shall be provided as required for a code-compliant system in the Buildings A and B areas of work only.

Q.36 1.2.4.2 Please confirm that the modifications to the existing fire suppression systems are only related to the specific work areas of the RFP. Confirm that the intent is not to upgrade the entirety of the systems throughout buildings A and B to meet the referenced code requirements.

A.36 Modifications in Building A are limited to the area of work and adjacent areas as necessary to support the area of work (such as tie-ins to existing mains outside the immediate area of work). Modifications in Building B are limited to the area of work and the additional scope noted in the scope of work Paragraph 1.2.4.2, “Additional Building B Scope”.

Q.37 1.2.4.2 Is the current plan in the RFP that all site investigations occur within 21 days of NTP? If so, the pipe corrosion analysis and investigations referenced in 1.2.4.2 will require additional time added to the schedule. Please advise.

A.37 Pipe corrosion analysis shall be completed within 90 days of NTP.

Q.38 1.2.5.5 - digital signage - Is the list provided sufficient or is a survey required to determine whether signage is in fact compliant with ADA.

A.38 The provided list is sufficient for displays not currently compliant with ADA as of April 2021. The D-B shall verify compliance during the pre-Construction Phase.

Q.39 1.2.5.6 para 2 - "where new courtrooms or hearing rooms are planned" is this applicable to this Scope of Work? In reading the RFP it does not appear that new courtrooms or hearing rooms are being planned.

A.39 Refer to the limited scope of work and plans for Building A in attachment J.23.

Q.40 1.2.6.3 - please confirm that structured cabling is limited to the areas of Work (unoccupied).

A.40 Horizontal structured cabling is limited to the areas of work, some areas which are unoccupied now and other areas that will be vacated prior to the start of demolition/construction activities.

Q.41 1.2.6.3 - please confirm that backbone cabling is being replaced in its entirety for both building A and B. what implications might this have on occupied architectural space?

A.41 All COMM Rooms in Building B and the one (1) COMM Room supporting the renovated areas in Building A shall be upgraded with new backbone cabling. Any existing pathways that need to be accessed in occupied space to support this upgrade will need to be coordinated with DC Courts. Intent to replace all in Building B? D-B shall determine if possible.

Q.42 1.2.6.3 Para 7 Please confirm that the Cat6 cabling replacement is limited to the specific work areas of the RFP.

A.42 Category 6A cabling replacement is limited to the specific work areas identified in the RFP.

Q.43 "1.2.6.5 para 3 - ""DC Courts shall provide a wireless design based on the final architectural and furniture design of any renovated space"" - what is the scope of work for the Design Builder?"

A.43 D-B is responsible for providing pathways, Category 6A cabling and installing the OFCI wireless access points based on the DC Courts wireless design.

Q.44 1.2.6.6 para 3 - "DC Courts installed new Cisco Catalyst 9300 48-port UPOE switches throughout building B in January 2021 as the new standard. Additional network electronics may be required to support the new renovated spaces depending on requirements and density of work area outlets." Please clarify the specific extent of the work required so that the proper design scope can be included.

A.44 Provide an allowance for (1) additional new switch per COMM Closet that supports the areas of work identified in the RFP.

Q.45 1.2.7.1 - This standard references "detention grade areas". Please confirm that there are no detention grade areas included in the scope of work. If so, provide the extent of work envisioned for these areas.

A.45 Confirmed. There are no detention grade areas included in the scope of work.

Q.46 1.2.7.2 -Has the bridging design determined whether there is sufficient space nearby to accommodate a new larger security equipment room in the Lower Level? What is the process for approval of the location of this new room?

A.46 The performance requirements address security systems, not a new larger security equipment room in the lower level. Based on the preliminary assessment, there appears to be sufficient space to accommodate the equipment room in the lower level, however, the D-B shall confirm feasibility during the Pre-Construction Phase and include it for discussion during DID development, should it be of benefit to the Owner.

Q.47 1.2.7.3 para 1 - "In support of IP architectures, provide distributive architecture for security systems by providing distributive security technology spaces (similar to telecom rooms) throughout the facility." Confirm that the SOW includes a full new security system.

A.47 Design-Builder shall design a new network architecture that supports a security system upgrade by the Courts' electronics security vendor, who will install security cabling and equipment. The design shall include primarily new security closets, network and equipment racks, cable trays in corridors and fiber optic backbone cabling from the new security equipment room to each of the security closets. During the pre-Construction Phase, the Design-Builder shall validate electronic security systems design requirements with Courts' security team to ensure distributive architecture design meets those requirements.

Q.48 1.2.7.4 para 1 "Provide accessible cable tray in corridors on all floors to support cable management." Did the bridging study confirm that there is sufficient space in the corridors above finished ceilings to support new cable trays? Please confirm. What requirements does the Government have for access to cable trays (via access panels).

A.48 No. The D-B shall evaluate and confirm sufficient space to determine design, placement, and routing of new cable trays.

Q.49 1.2.7.5 para 1 "Review potential for PIV (Personal Identity Verification) or Smart card initiatives to eventually eliminate the use of proximity-based systems. New systems should consider credential upgrades and will likely require a multi-phased process." what is the process for getting to consensus with stakeholders? how is the schedule going to accommodate the workshops necessary to provide consensus and direction for the PIV system?

A.49 Enabling use of PIV or smart credential has been an ongoing discussion with Courts' security and other stakeholders. The Courts' anticipates that the D-B will validate the PIV requirement(s)

during the pre-Construction Phase design process and advise on system infrastructure requirement feasibility and cost. The Courts' will adhere to the D-B's approved Design Submission Schedule and provide a decision on the timeline required for inclusion in the design.

Q.50 J.33 - 1.2.7.5 para 5 "Exterior Video Camera Coverage" section: If exterior light poles are to be included as part of this building renovation, include low-voltage conduit infrastructure between all pole bases with into two (2) building entry points that connect to the main security room." Confirm if exterior lighting is required for this scope of work.

A.50 Exterior lighting is not in the scope of work.

Q.51 "The Program of Requirements Attachment J.25, Page 2, para 2 indicatees ""The personnel projections and space requirements provided in this POR have not been reviewed by the stakeholder groups prior to issuance of this document and should be verified before proceeding with design.""

A.51 The D-B shall validate/verify ALL requirements provided as part of the RFP and provide a Program Verification Report per Section C.4.2.6. Per Section C.4.3.1, the D-B shall revise and provide the Program Verification Report through the conclusion of the DID development process. Should the final version of the Program Verification Report identify any changes to requirements provided in the RFP that have scope, cost or schedule impacts, those will be addressed prior to the D-B progressing to the Concept Design (35%) Submission.

Q.52 Please advise - if there is the need to confirm personnel projections,and when will these be confirmed or edited by stakeholders as it relates to the NTP and Schedule? What, if any, support is anticipated being needed by the Design-Build team during DID1 to memorialize projections. If projections change, how does that translate into a revised POR? Is a revised POR necessary for the SOW for this project? (note, that there is continued emphasis on uncertainty of the personnel projections on page 5, section 3 and page 16, section 6 as well)."

A.52 Speaking specifically about "personnel projections," there is no requirement for the D-B to confirm "projections." The Courts' does not anticipate any personnel changes to the POR provided with the RFP, however, verification of ALL requirements is required (see A.51) with the intent that the D-B will comprehensively identify any discrepancies, contradictions, issues, changes, etc. to the requirements prior to developing a concept design and moving to design development.

Q.53 Program of Requirements- Attachment J.25 - As a similar question to #47 - the Masterplan of 2019 from the POR document indicates slightly larger space requirements than the current 2021 POR. Please confirm that the POR 2021 is to be followed. (see graphic below)

A.53 The D-B shall verify the 2021 POR data, as it is the most recent and is based on recent interviews with the End Users. The 2019 Master Plan was based on limited data available in 2018, therefore the 2021 POR data that was collected in 2021 supersedes it.

Figure 6. POR USF Compared to the 2019 Master Plan

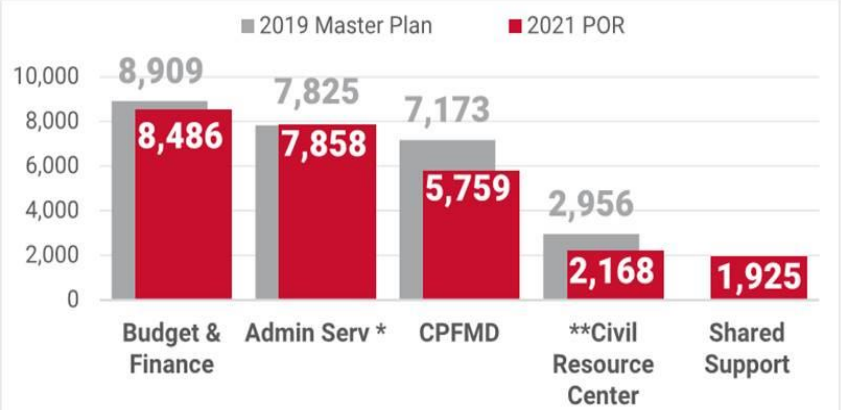

Q.54 Please confirm that the required permits referenced in RFP C.5.7.4 is limited to trade permits. Please clarify the the specific Authority Having Jurisdiction over the project for the purposes of permits and inspections - will DCRA be involved in any permitting for the project. Will the D-B be required to obtain building permits in addition to trade permits?

A.54 Design-Builder shall acquire building permits and all applicable trade permits. See A.65

Q.55 "Per RFP C.4.2.4.3 -""As-Built Drawings. As-Built drawings that will be provided by Owner at the Pre-Bid Conference shall be verified for the D-B for accuracy prior to the start of design. It is the responsibility of the D-B to familiarize themselves with the existing conditions, verify all measurements, confirm existing structural and MEP capacities throughout and impacting theWork area, and collect all relevant data needed to produce the required design and construction documentations for a complete execution and construction of the Project in accordance with all contract requirements.

As part of the design effort, D-B shall verify existing utilities, capacity, location and connections. If Owner-provided as-built drawings do not match field conditions, D-B's design and specifications shall document and provide correct size, capacity, location, and connections to meet the Project performance requirements. Any necessary modifications to the existing systems shall be determined during the development of design and included in the D-B's design submissions. D-B shall also identify any recommended testing or monitoring that would be beneficial to advance the Project to meet the required Substantial Completion date.""

The RFP Schedule on page 8 has all of the above to be completed within 14 days of NTP and submittal of a full report 21 days after NTP. The question here is that, while it may be possible to identify some areas of the as-built documents that deviate from existing conditions, the design implications may not be known until the design progresses and program requirements are clarified and their effect on the design MEP/architectural systems is determined. Given the extent of the verification necessary and the effect on the design process, please advise if additional time can be provided in the schedule for the work required per C.4.2.4.3."

A.55 Section C.4.2.4.3 is not referenced on page 8 and is not required within 14 days of NTP.
The Existing Site Survey and Existing Site Survey Report are referenced on page 8, detailed in Section C.4.2.4.2., and required within 14 and 21 days after NTP.
Should the D-B require more time to complete both, then D-B shall bring it to the attention of the Courts for consideration after award. The Courts' will consider extending the timeline if it will not impact the delivery of the Corrected Final Design no later than (NLT) 30 April 2022.

Q,56 RFP C.4.3.4.3 - Please advise on the accessibility of the building to perform the Verification of Existing Conditions -can the site survey be performed during normal working hours or will all site investigations have to be performed off hours.

A.56 The site survey may be performed during normal working hours.

Q.57 RFP C.4.2.4.3 - Please advise if selective demolition can be performed in support of the existing conditions assessment. It is highly likely that this will be required due to existing concealed conditions that may affect the ability to verify the as-built conditions.

A.57 Yes, selective demolition can be performed in support of the existing conditions assessment. D-B shall follow all DCRA regulations.

Q.58 RFP - B.7 Please confirm that design costs for the Options 1-3 are not to be included in the fixed price for Preconstruction (Phase One) Services.

A.58 Confirmed.

Q.59 RFP C.4.4.1.4 -Please advise if current hydrant flow data is available for the design effort - or - if the Preconstruction Services should include the costs to perform a hydrant flow test.

A.59 No hydrant flow data is available. Design-Builder shall perform a hydrant flow test during the pre-Construction Phase.

Q.60 "RFP Section L.10.4.1. indicates: ""Proposed Subcontractors. Per Section L.10.4 above, provide information pertaining to proposed subcontractors. At a minimum the offeror shall include Mechanical, Electrical, Plumbing, IT and AV subcontractors."" –

A.60 Refer to Answer 61.

Q.61 Please confirm the intent is to provide details related to design subcontractors (subconsultants), not trade subcontractors."

A.61 Confirmed. Provide design subconsultants in response to L.10.4.1.

Q.62 Does the court have specifications for the existing materials/ finishes we assume we will be required to match?

A.62 Refer to attachment J.37 Design Standards for existing material and finish specifications.

Q.63 Will the court allow the design team full access to affected areas for existing conditions' survey? Will that need to take place during off hours?

A.63 The Design-Builder will have full access to perform the existing conditions survey. The survey may be performed during normal working hours.

Q.64 Please verify how much detail is required for the construction schedule.

A.64 Refer to section L.10.5 of the RFP. All items listed in L.10.5.8 are required.

Q.65 Is a permit required through DCRA and if yes is a 3rd party inspection required?

A.65 Yes, a permit is required through DCRA. Design-Builder shall acquire building permits and all applicable trade permits. DCRA certified inspectors are required for all inspections. The Design-Builder shall determine if 3rd party inspections are used. All inspection requirements shall be determined prior to negotiating construction phase.

Q.66 Are there existing condition drawings available for review? Are they from the last renovation or original documents?

A.66 Refer to attachment J.40 Interior Improvements to DC Superior Courts Building 'B' dated 2003. No major improvements have been made to the building since.

Q.67 Section L.10.4.1 requires proposed subcontractors. Are you looking for sub-consultants (designers) or sub-contractors (builders)?

If subcontractors, it will be difficult to get the requested information because we need to go through a pre-qualification effort that we normally wouldn't do until we have plans to share with them. At this point in the process, I don't think I would be providing a lot of relevant information. Can this requirement be eliminated or modified?

A.67 Refer to Answer 61.

Q.68 Is the DB responsible for the design, specification, and installation of new furniture?

A.68 No. Furniture shall be furnished and installed by the Courts. The Design-Builder shall coordinate per sections C.3.4.1 and C.3.5.

Please remember to check the DC Courts Website daily for posting of Amendment updates

https://www.dccourts.gov/about/procurement-contracts-branch

0

DCSC-21-RFP-087

DC Courts – Migration from Gallery Place Modernizations

Date: 8:00 am, August 9, 2021
Sign-In Sheet

Name:	Organization:	Phone:	Email:
Judi Hill	CPFMD	(202) 879-2871	Judith.hill@dccsystem.gov
Cameron Wilson	Cooper	240-405-4040	cwilson@cooperbuilds.com
JULIANE TRINDADE	PAGE	240 641 3416	jtrindade@pagethink.com
Daniel Garripoli	Cooper	240-578-1176	dgarripoli@cooperbuilds.com
Jocelyn Battle	COAKLEYWILLIAMS	240 750 4574	jbattle@coakleywilliams.com
Michelle Monnett	Page	202-831 5430	mmonnette@pagethink.com
John Mousch	Cooper	202-379-8294	Jmousch@cooperbuilds.com
TJ SPENSIERI	COOPER	804-543-3646	tspensieri@cooperbuilds.com

Interior Improvements to DC Superior Courts Building 'B'

409 E Street, NW
Washington, DC 20001

CONSTRUCTION PACKAGE

US General Services Administration

301 7TH Street, SW, Room 2021
Washingotn, DC 20407

Dalco

Construction Management and
Commercial General Contractor
10005 Old Columbia Road, Suite L261
Columbia, MD 21046
Tel : (410) 290-8827

ISSUED FOR CONSTRUCTION
(FINAL) - APRIL 8, 2003

LEO A DALY

PLANNING
ARCHITECTURE
ENGINEERING
INTERIORS

EST. 1915

ATLANTA
AUSTIN
BERLIN
DALLAS
HONG KONG
HONOLULU
HOUSTON
LAS VEGAS
LOS ANGELES
MADRID
MIAMI
OMAHA
ORLANDO
PHOENIX
SAN ANTONIO
WASHINGTON, DC

DRAWING SHEET LIST AND ISSUE RECORD

ISSUE KEY

- ◯ FOR INFORMATION ONLY
- ⊗ FOR INFORMATION ONLY
- ◕ FOR PROGRESS AND PERMIT
- ✕ DESIGN DEVELOPMENT
- ● ISSUED FOR CONSTRUCTION
- 3△ DRAWING REVISION

INDEX OF DRAWINGS

		50% PROGRESS SUBMISSION 03/04/03	ISSUED FOR PERMIT 03/10/03	100% PROGRESS ISSUE 03/25/03	FINAL - (ISSUED FOR CONSTRUCTION) 04/08/03
	GENERAL				
G0.01	COVER SHEET	◕	◕	◕	●
G0.02	SHEET LIST AND ISSUE RECORD	◕	◕	◕	●
G0.03	VICINITY PLAN / GENERAL NOTES/ CODE ANALYSIS/ SYMBOLS & ABBREVIATIONS / KEY NOTES	◕	◕	◕	●
G0.04	CONSTRUCTION NOTES	◕	◕	◕	●
G0.05	TEMPORARY EGRESS AND PHASING PLANS	◕	◕	◕	●
	CIVIL				
C1.01	EXISTING CONDITONS PLAN		◕	◕	●
C2.01	EROSION CONTROL DETAILS NOTES			◕	●
C3.01	SITE UTILITY PLAN			◕	●
C3.02	WATER DETAILS			◕	●
	ARCHITECTURAL				
A1.00	BASEMENT FLOOR PLAN	◕	◕	◕	●
A1.01	FIRST FLOOR PLAN	◕	◕	◕	●
A1.02	SECOND FLOOR PLAN	◕	◕	◕	●
A1.03	THIRD FLOOR PLAN	◕	◕	◕	●
A1.04	ATTIC FLOOR PLAN	◕	◕	◕	●
A1.05	ROOF PLAN	◕		◕	●
A1.11	FIRST FLOOR FINISH PLAN	◕	◕	◕	●
A1.12	SECOND FLOOR FINISH PLAN	◕	◕	◕	●
A1.13	THIRD FLOOR FINISH PLAN	◕	◕	◕	●
A1.21	FIRST FLOOR FURNITURE PLAN	◕		◕	●
A1.22	SECOND FLOOR FURNITURE PLAN	◕		◕	●
A1.23	THIRD FLOOR FURNITURE PLAN	◕		◕	●
A1.31	FIRST, SECOND, AND THIRD FLOOR POWER/DATA LOCATION PLANS				●
A2.11	PARTITION TYPES	◕	◕	◕	●
A2.12	RATED ENCLOSURE DETAILS			◕	●
A2.21	DOOR SCHEDULE	◕	◕	◕	●
A2.22	DOOR DETAILS	◕	◕	◕	●
A2.31	FINISH SCHEDULE (1ST AND 2ND FLOOR) FINISH KEY AND NOTES			◕	●
A2.32	FINISH SCHEDULE (2ND AND 3RD FLOOR)			◕	●
A5.01	ENLARGED FLOOR PLANS	◕	◕	◕	●
A5.02	ENLARGED TOILET PLANS	◕	◕	◕	●
A5.11	TOILET ELEVATIONS	◕	◕	◕	●
A5.12	TOILET ELEVATIONS	◕	◕	◕	●
A5.22	INTERIOR ELEVATIONS AND SECTIONS	◕	◕	◕	●
A5.23	INTERIOR ELEVATIONS AND SECTIONS	◕	◕	◕	●
A5.24	INTERIOR ELEVATIONS AND SECTIONS	◕	◕	◕	●
A5.25	WINDOW/RADIATOR CONDITION ELEVATIONS AND DETAILS			◕	●
A5.31	CEILING & INTERIOR DETAILS	◕	◕	◕	●
A5.32	INTERIOR DETAILS	◕	◕	◕	●
A5.33	TOILET DETAILS				●
A5.41	BASEMENT, ATTIC AND ROOF DETAILS			◕	●
A6.00	BASEMENT FLOOR REFLECTED CEILING PLAN				●
A6.01	FIRST FLOOR REFLECTED CEILING PLAN	◕	◕	◕	●
A6.02	SECOND FLOOR REFLECTED CEILING PLAN	◕	◕	◕	●
A6.03	THIRD FLOOR REFLECTED CEILING PLAN	◕	◕	◕	●
A6.11	ENLARGED RCP	◕	◕	◕	●
	STRUCTURAL				
S1.00	GENERAL NOTES	◕	◕	◕	●
S1.01	FIRST FLOOR FRAMING PLAN		◕	◕	●
S1.04	ATTIC FLOOR CONCRETE FRAMING PLAN		◕	◕	●
S1.04A	ATTIC FLOOR STEEL FRAMING PLAN			◕	●
S1.05	ROOF STEEL FRAMING PLAN			◕	●
S2.01	SECTIONS AND DETAILS	◕	◕	◕	●

INDEX OF DRAWINGS

		50% PROGRESS SUBMISSION 03/04/03	ISSUED FOR PERMIT 03/10/03	100% PROGRESS ISSUE 03/25/03	FINAL - (ISSUED FOR CONSTRUCTION) 04/08/03
	MECHANICAL				
M/P-00	MECHANICAL - NOTES AND ABBREVIATION	◕	◕	◕	●
M1.00	MECHANICAL - BASEMENT PLAN	◕	◕	◕	●
M1.01	MECHANICAL - FIRST FLOOR PLAN	◕	◕	◕	●
M1.02	MECHANICAL - SECOND FLOOR PLAN	◕	◕	◕	●
M1.03	MECHANICAL - THIRD FLOOR PLAN	◕	◕	◕	●
M1.04	MECHANICAL - ATTIC FLOOR PLAN	◕	◕	◕	●
M2.01	HEATING - FIRST FLOOR PLAN		◕	◕	●
M2.02	HEATING - SECOND FLOOR PLAN		◕	◕	●
M2.03	HEATING - THIRD FLOOR PLAN		◕	◕	●
M3.01	MECHANICAL - SCHEMATIC FLOW DIAGRAM & SEQUENCE OF OPERATION		◕	◕	●
M4.01	MECHANICAL - SCHEDULES		◕	◕	●
M5.01	MECHANICAL - DETAILS	◕	◕	◕	●
M5.02	MECHANICAL - DETAILS	◕		◕	●
	PLUMBING				
P1.00	BASEMENT FLOOR PLAN - PLUMBING				●
P1.01	FIRST FLOOR PLAN - PLUMBING	◕	◕	◕	●
P1.02	SECOND FLOOR PLAN - PLUMBING	◕	◕	◕	●
P1.03	THIRD FLOOR PLAN - PLUMBING	◕	◕	◕	●
P1.04	ATTIC FLOOR PLAN - PLUMBING	◕	◕	◕	●
P2.01	PART PLANS - PLUMBING	◕	◕	◕	●
P3.01	SANITARY RISER DIAGRAMS	◕	◕	◕	●
P3.02	DOMESTIC WATER RISER DIAGRAMS		◕	◕	●
P3.03	FIRE PROTECTION RISER DIAGRAMS		◕	◕	●
P3.04	DRINKING WATER - SANITARY AND WATER RISER DIAGRAMS		◕	◕	●
P4.01	PLUMBING SCHEDULES		◕	◕	●
P5.01	PLUMBING DETAILS		◕	◕	●
	ELECTRICAL				
E0.01	ELECTRICAL COVER SHEET	◕	◕	◕	●
E1.00	POWER PLAN - BASEMENT	◕	◕	◕	●
E1.01	POWER PLAN - FIRST FLOOR	◕	◕	◕	●
E1.02	POWER PLAN - SECOND FLOOR	◕	◕	◕	●
E1.03	POWER PLAN - THIRD FLOOR	◕	◕	◕	●
E1.04	POWER PLAN - ATTIC		◕	◕	●
E1.05	ELECTRICAL CLOSETS		◕	◕	●
E2.00	LIGHTING PLAN - BASEMENT				
E2.01	LIGHTING PLAN - FIRST FLOOR	◕	◕	◕	●
E2.02	LIGHTING PLAN - SECOND FLOOR	◕	◕	◕	●
E2.03	LIGHTING PLAN - THIRD FLOOR	◕	◕	◕	●
E2.04	LIGHTING PLAN - ATTIC		◕	◕	●
E3.01	POWER RISER AND FEEDER SCHEDULE	◕	◕	◕	●
E3.02	ONE-LINE DIAGRAM, ELEVATIONS	◕	◕	◕	●
E4.01	PANELBOARD SCHEDULES		◕	◕	●
E4.02	PANELBOARD SCHEDULES		◕	◕	●
E4.03	PANELBOARD SCHEDULES				●

Interior Improvements to DC Superior Courts Building 'B'

409 E Street, NW
Washington, DC 20001

U.S. General Services Administration
301 7th Street, SW, Room 2021
Washington, DC 20407

LEO A DALY
PLANNING ARCHITECTURE ENGINEERING INTERIORS
EST. 1915
1201 Connecticut Ave, NW
Washington DC 20036 USA
Tel 202-861-4600 Fax 202-872-8530

Dalco INCORPORATED
10005 Old Columbia Road Suite L261
Columbia, MD 21046
Tel: 410-290-8827
Fax: 410-290-8812

Contractor
Address

KEY PLAN

ISSUES / REVISIONS

NO.	DESCRIPTION	DATE

FILE LOG

ACTIVITY	REFERENCE	BY
Manager		
Design		
Draw		
Draw		
Draw		
Check		

REGISTRATION

JOB No 52010300

CONSTRUCTION PACKAGE

ISSUED FOR CONSTRUCTION (FINAL) APRIL 8, 2003

SHEET LIST AND ISSUE RECORD

G0.02

© Leo A Daly Company 2003

GENERAL SYMBOL LEGEND

MATERIALS

EARTH ETC.	EARTH, GRAVEL	TILE	BACK UP, CERAMIC OR QUARRY
CONCRETE ETC.	REGULAR, TERRAZZO	STONE	MARBLE, LIMESTONE
METALS	STEEL, ALUMINUM	WOOD	FINISH, BLOCKING, STUD PARTITION
BRICK	FACE, COMMON, FIRE	GYPSUM	PLASTER OR WALLBOARD
CMU	CMU	GLASS	LARGE SCALE, SMALL SCALE, ELEVATION
PARTITION	METAL STUD PARTITION, SHAFT WALL	INSULATION	BATTS OR LOOSE

REFERENCE

- DETAIL NUMBER / SHEET ON WHICH DETAIL IS DRAWN
- SUB-TITLE
- SECTION
- DOOR OR WINDOW FRAME SECTION
- ELEVATION (WHERE ONLY ONE IS REFERENCED)
- INTERIOR ELEVATION (SOLID INDICATES VIEWS REFERENCED) — A, B
- MATCH LINE / COLUMN LINE
- DOOR NUMBER (01A) SUB-NUMBER AS REQD. — NOTE; WHERE MULTIPLE SUITES ARE PART OF THE SCOPE, REFER TO DOOR SCHEDULE FOR FULL DOOR NUMBER.
- (J.202) ITEM REFERENCE FOR MILLWORK FURNITURE, WOUIPMENT, ETC.
- (210A) MAIN ENTRY SUITE NUMBER / ROOM NUMBER
- NEW PARTITION
- EXISTING WALL/PARTITION TO REMAIN
- AK-49 ARCHITECTURAL KEYNOTE
- 120B ROOM NUMBER AND STAIR NUMBER
- EQUIPMENT NUMBER
- (L1) WINDOW/ LOUVER TYPE
- VERTICAL ELEVATION INDICATION
- COLUMN NUMBER OR LETTER (EXISTING CONST.)
- (XX) PARTITION TYPE DESIGNATION
- (X/X) DRAWING NUMBER / SHEET NUMBER
- (x-1) FINISH TYPE
- (x) REVISION NUMBER
- (B) INDICATES SIDES(S) OF PARTITION TO RECEIVE WOOD BLOCKING FOR WALL MOUNTED EQPT. OR FURNITURE. IF NO DIMENSION IS GIVEN, BLOCKING EXTENDS FULL WIDTH OF INDICATED PARTITION.
- CENTERLINES, PROJECTED LINES
- PROPERTY OR BOUNDARY LINES
- NOT IN CONTRACT (NIC)

VICINITY/SITE MAP

NORTHWEST WASHINGTON, DC

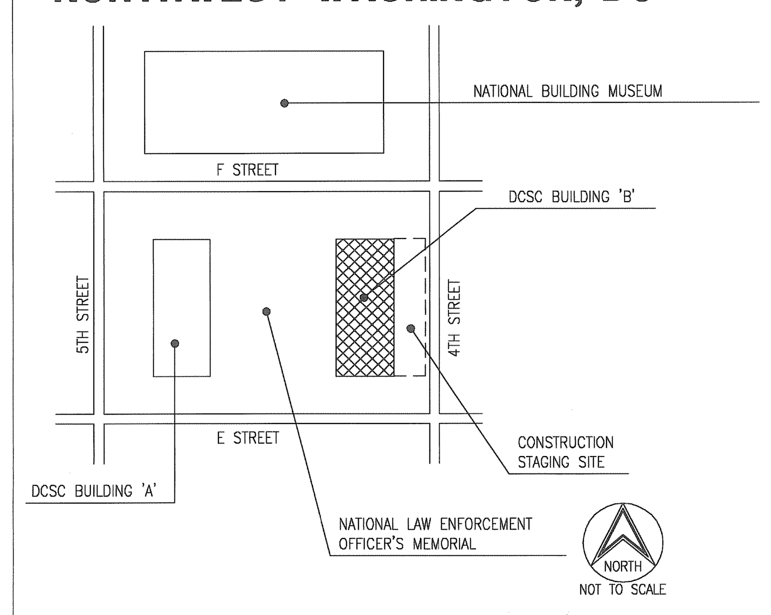

PROJECT/ BUILDING DATA

PROJECT DESCRIPTION

GENERAL PROJECT INFORMATION:
THE PROJECT ENTAILS INTERIOR RENOVATION WORK TO THE DISTRICT OF COLUMBIA SUPERIOR COURT BUILDING 'B', LOCATED AT 409 E STREET, NW, WASHINGTON, DC. DC SUPERIOR COURT BUILDING 'B' WAS BUILT IN 1938, CONSISTS OF APPROXIMATELY 108,000 SQUARE FEET INCLUDING BASEMENT, AND IS OF TYPE I-B NON-COMBUSTIBLE CONSTRUCTION. THE BUILDING WILL BE PROTECTED THROUGHOUT BY AN AUTOMATIC FIRE SPRINKLER SYSTEM. THERE IS NO PROPOSED CHANGE IN USE, EGRESS OR OCCUPANCY IN THIS APPLICATION.

PERMIT APPLICATIONS AND FILING:
THE PROJECT IS FILED FOR PERMITTING UNDER MULTIPLE SEPARATE APPLICATIONS AS FOLLOWS.
- NEW INTERIOR WORK IS FILED UNDER THIS APPLICATION AND INCLUDES ALL WORK IN THIS PACKAGE.
- ASSOCIATED DEMOLITION WORK HAS BEEN FILED AND PERMITTED UNDER SEPARATE APPLICATION (PERMIT NO. B448640).
- ASSOCIATED FIRE ALARM WORK SHALL BE FILED UNDER A SEPARATE AND CONCURRENT APPLICATION.
- ASSOCIATED EXTERIOR WORK REQUIRING TWO ROOF PENETRATIONS AT FLAT ROOF AREA SHALL BE FILED UNDER SEPERATE AND CONCURRENT APPLICATON.

PROJECT SCOPE:
ALL WORK IS INTERIOR WORK, EXCEPT FOR SUB-GRADE FIRE SERVICE PIPING WORK AS INDICATED BELOW, AND SHALL INCLUDE: INSTALLATION OF NON-LOADBEARING PARTITIONS, DOORS, CEILINGS AND ARCHITECTURAL FINISHES; THE ADDITION OF PLUMBING FIXTURES AT FIRST, SECOND AND THIRD FLOOR TOILET ROOMS; PARTIAL REINFORCEMENT OF STRUCTURAL SLAB AT NORTH AND SOUTH ENDS OF FIRST FLOOR TO SUPPORT FILING SYSTEMS; INSTALLATION OF NEW CONCRETE PLATFORMS AT ATTIC TO SUPPORT NEW MECHANICAL EQUIPMENT; PARTIAL REPLACEMENT OF MECHANICAL, ELECTRICAL, AND PLUMBING SYSTEMS THROUGHOUT; REPLACEMENT OF EXISTING ELECTRIC WATER COOLERS AND ASSOCIATED SUPPLY PIPING THROUGHOUT; REPLACEMENT OF FIRE STANDPIPE SYSTEM; INSTALLATION OF NEW AUTOMATIC FIRE SPRINKLER SYSTEM THROUGHOUT; AND REPLACEMENT OF FIRE ALARM SYSTEM THROUGHOUT.

SUB-GRADE EXTERIOR WORK SHALL INCLUDE THE INSTALLATION OF NEW FIRE SUPPRESSION SYSTEM SERVICE TIE-IN AND CONNECTION TO WATER MAIN AT STREET.

PROJECT PHASING SEQUENCE
THE PROJECT WILL BE EXECUTED IN TWO PHASES, PHASE I AND PHASE II. THE WORK WILL ENTAIL ALL FLOORS OF THE BUILDING. PHASE I WILL INCLUDE WORK AT BASEMENT, FIRST FLOOR, THIRD FLOOR AND ATTIC. PHASE II WILL BEGIN UPON COMPLETION OF PHASE I AND WILL INCLUDE THE SECOND FLOOR. SEE DRAWING G0.05 FOR PHASING AND TEMPORARY EGRESS PLANS. THE BUILDING WILL BE PARTIALLY OCCUPIED DURING COMPLETION OF THE WORK DURING PHASE I AND PHASE II. DURING PHASE I, THE SECOND FLOOR WILL BE OCCUPIED AND ALL REQUIRED EGRESS AND LIFE SAFETY PROVISIONS WILL BE INTACT AND OPERATIONAL. UPON COMPLETION OF PHASE I, THE TENANT ON THE SECOND FLOOR WILL RELOCATE TO A LOCATION DESIGNATED BY THE OWNER (DC SUPERIOR COURT) AND PHASE II WORK WILL COMMENCE ON THE SECOND FLOOR. THE BASEMENT, FIRST, AND THIRD FLOORS WILL BE OCCUPIED DURING PHASE II WORK AND ALL REQUIRED EGRESS AND LIFE SAFETY PROVISIONS WILL BE INTACT AND OPERATIONAL.

CODE DATA

APPLICABLE CODES

FIRE/LIFE SAFETY:	LIFE SAFETY CODE, 1996 EDITION (NFPA 101) THE BOCA NATIONAL FIRE PREVENTION CODE, 1996 EDITION
BUILDING:	THE BOCA NATIONAL BUILDING CODE, 1996 EDITION
STRUCTURE:	THE BOCA NATIONAL BUILDING CODE, 1996 EDITION
MECHANICAL:	INTERNATIONAL MECHANICAL CODE, 1996 EDITION
ELECTRICAL:	NATIONAL ELECTRICAL CODE, 1996 EDITION (NFPA 70)
PLUMING:	INTERNATIONAL PLUMING CODE, 1995 EDITION
ENERGY :	ASHRAE/IESNA STANDARD 90.1 1989 EDITION
ACCESSIBILITY:	AMERICANS WITH DISABILITIES ACT ACCESSIBILITY GUIDELINES
PROPERTY MAINTENANCE:	THE BOCA NATIONAL PROPERTY MAINTENANCE CODE, 1996 EDITION
SUPPLEMENT:	THE DISTRICT OF COLUMBIA CONSTRUCTION CODES 1999 SUPPLEMENT

CODE DATA CONT.

CONSTRUCTION TYPE AND FIRE SEPARATION

EXISTING BUILDING IS OF TYPE I-B NON-COMBUSTIBLE CONSTRUCTION (CONSTRUCTED IN 1938) AND SHALL BE EQUIPPED WITH AN AUTOMATIC FIRE SPRINKLER SYSTEM THROUGHOUT.

FIRE RATED ASSEMBLIES AND SEPARATION:
ALL NEW SHAFT ENCLOSURES SHALL BE CONSTRUCTED OF 2 HOUR U.L. RATED CONSTRUCTION ASSEMBLIES.
ALL OPENINGS AT FLOOR SLABS AND SHAFTS SHALL BE FIRE-STOPED AND SAFED TO MAINTAIN REQUIRED FIRE SEPARATION WITH U.L. APPROVED CONSTRUCTION ASSEMBLIES. DUCT PENETRATIONS AT FLOOR SLABS AND SHAFTS SHALL BE PROTECTED BY APPROVED AUTOMATIC FIRE/SMOKE-DAMPERS TO MAINTAIN REQUIRED FIRE SEPARATION.

OCCUPANCY USE GROUP

THERE IS NO PROPOSED CHANGE IN THE OCCUPANCY, OCCUPANT LOAD, OR USE OF THE BUILDING. THE PRIMARY OCCUPANCY OF THE BUILDING IS 'BUSINESS' (USE GROUP B) WITH ACCESSORY 'ASSEMBLY' (USE GROUP A-2) IN COURT ROOMS, HEARING ROOMS AND CONFERENCE ROOMS.

MEANS OF EGRESS

THERE IS NO PROPOSED CHANGE IN THE EGRESS OF THE BUILDING. THE BUILDING CONTAINS A MINIMUM OF THREE EGRESS STAIRS AT ALL FLOORS EXCEPT FOR THE ATTIC WHICH CONTAINS ONE, IS NOT AN OCCUPIED SPACE AND SHALL BE PROTECTED BY AN AUTOMATIC FIRE SPRINKLER SYSTEM. THE FIRST FLOOR (STREET LEVEL) CONTAINS FOUR MEANS OF EGRESS.

STAIRS: ALL STAIR SHAFTS ARE ORIGINAL, AND CONSTRUCTED OF ORIGINAL FIRE-RATED NON-COMBUSTIBLE CONSTRUCTION. ORIGINAL EXISTING STAIR SHAFT CONSTRUCTION ASSEMBLIES CONSIST OF TWO WYTHES OF CONCRETE BLOCK WITH A CAVITY OF 4 TO 8 INCHES IN BETWEEN THE WYTHES AND 1 INCH OF SOLID PLASTER ON EACH SIDE, OR ONE WYTHE OF 6 INCH THICK CONCRETE BLOCK WITH 1 INCH OF SOLID PLASTER ON EACH SIDE. ALL STAIRS SHALL BE PROTECTED BY AUTOMATIC FIRE SPRINKLERS.

EXISTING EGRESS STAIRS CONTAIN PAIRS OF NON-COMPLIANT 24" DOORS (TWO 24" LEAFS INSTEAD OF THE MINIMUM 36" SINGLE LEAF REQUIRED BY CURRENT CODE) AT EACH FLOOR LEVEL. CLEAR PASSAGE WIDTH AT DOORWAYS IS 46" WITH BOTH LEAFS IN OPEN POSITION. THE EXISTING PASSAGE WIDTH AT EACH STAIR DOOR OPENING EXCEEDS THE REQUIRED EGRESS WIDTH PER OCCUPANT REQUIRED BY APPROXIMATELY 24". THERE IS NO PROPOSED CHANGE TO THE EGRESS STAIRS OR THE EXISTING NON-COMPLIANT DOOR LEAFS.

CORRIDORS: THE BUILDING USE IS BUSINESS (B) WITH ACCESSORY ASSEMBLY (A-2) USE, AND SHALL BE PROTECTED BY AN AUTOMATIC FIRE SPRINKLER SYSTEM THROUGHOUT. CORRIDORS ARE NOT FIRE-RATED AS PER (BOCA TABLE 1011.4).

FIRE ALARM, DETECTION AND SUPPRESSION:

FIRE ALARM SYSTEM

THE BUILDING WILL BE EQUIPPED WITH A NEW ADDRESSABLE FIRE ALARM SYSTEM THROUGHOUT. THIS WORK WILL BE FILED UNDER A SEPARATE CONCURRENT APPLICATION.

SPRINKLER AND FIRE-STANDPIPE SYSTEMS

AN AUTOMATIC FIRE SPRINKLER SYSTEM SHALL BE PROVIDED THROUGHOUT ON ALL STORIES, AND THE EXISTING FIRE-STANDPIPE SYSTEM SHALL BE REPLACED WITH NEW.

PORTABLE FIRE EXTINGUISHERS

PORTABLE FIRE EXTINGUISHERS SHALL BE PROVIDED AS REQUIRED.
BUSINESS OCCUPANCY (LOW HAZARD OCCUPANCY) RATING/TYPE 2-A MAXIMUM FLOOR AREA 6000SF (3000SF PER A) MAXIMUM TRAVEL DISTANCE 75FT (BOCA 921.2/ NFPA 10)

GENERAL NOTES

HAZARDOUS MATERIAL
REQUIRED REMOVAL AND ABATEMENT OF HAZARDOUS MATERIAL IS NOT PART OF THE SCOPE ON THESE DOCUMENTS AND HAS BEEN FILED UNDER A SEPARATE AND CONCURRENT APPLICATION. "ENVIROBATE" HAS FILED FOR PERMITS TO COMPLETE ALL HAZARDOUS MATERIAL REMOVAL AND ABATEMENT, AND THEY CAN BE CONTACTED AT 202-526-9178.

TENANT SAFETY NOTES
1. STRUCTURAL: CONTRACTOR TO PROVIDE ADEQUATE TEMPORARY BRACING AND SHORING WHEREVER ANY STRUCTURAL WORK IS INVOLVED.

2. MEANS OF EGRESS: ALL EXISTING MEANS OF EGRESS FOR TENANTS OF THE BUILDING AND TENANTS OF OCCUPIED SPACES ON FLOORS TO BE DEMOLISHED SHALL BE MAINTAINED CLEAR AND FREE OF ALL OBSTRUCTIONS, SUCH AS BUILDING MATERIALS, TOOLS, ETC.

3. FIRE SAFETY: ALL BUILDING MATERIALS STORED AT CONSTRUCTION AND/OR IN ANY AREA OF THE BUILDING ARE TO BE SECURED IN A LOCKED AREA, ACCESS TO SUCH AREAS TO BE CONTROLLED BY OWNER AND/OR CONTRACTOR. DUST CONTROL: DEBRIS, DIRT, AND DUST TO BE KEPT TO A MINIMUM, AND BE CONFINED TO THE IMMEDIATE CONSTRUCTION AREA, AND BE CLEANED UP AND CLEARED FROM BUILDING PERIODICALLY TO AVOID ANY EXCESSIVE ACCUMULATION. WORK DURING BUSINESS HOURS: DURING BUSINESS HOURS, CONSTRUCTION OPERATIONS WILL NOT INVOLVE INTERRUPTION OF HEATING, PASSENGER ELEVATOR, OR ELECTRICAL SERVICES TO OCCUPIED SPACES OF THE BUILDING OUTSIDE THE SCOPE OF WORK.

4. SERVICES REQUIRED TO BE TEMPORARILY DISCONNECTED FOR SCOPE OF WORK SHALL REQUIRE AUTHORIZATION FROM OWNER. PROVIDE OWNER WITH 48 HR. WRITTEN NOTIFICATION OF ALL UTILITY OUTAGES.

CUTTING AND PATCHING
1. WHERE NEW AND OLD WORK JOIN AT WOOD, STONE, PLASTER, CERAMIC TILE, AND TERRAZZO FINISHES, CAREFULLY CUT AT EXISTING JOINTS ON STRAIGHT ORTHOGONAL LINES TO MINIMIZE PATCHING AND ALLOW REFINISHING AND INSTALLATION OF NEW ADJACENT SURFACES. CUT AT EXISTING JOINTS WHERE POSSIBLE. CUT OUT EMBEDDED ANCHORAGE AND ATTACHMENT ITEMS AS REQUIRED TO PROPERLY PROVIDE FOR PATCHING AND REPAIR OF THE RESPECTIVE FINISHES. REMOVE ALL DEBRIS AS THE WORK PROGRESSES. MAINTAIN THE PREMISES IN A NEAT AND CLEAN CONDITION AT THE END OF EACH WORK DAY.

2. COVER AND PROTECT EQUIPMENT AND FIXTURES FROM DAMAGE AND SOILING DURING ALTERATION WORK INCLUDING EXISTING FURNITURE, EQUIPMENT AND FIXTURES TO REMAIN OR TO BE SALVAGED AND STORED. ERECT AND MAINTAIN DUST-PROOF PARTITIONS AND CLOSINGS TO PREVENT SPREAD OF DUST OR FUMES, AND NOISE TO OCCUPIED AREAS OR OTHER PARTS OF BUILDING.
3. MAINTAIN FIRE RATINGS AT EXISTING RATED PARTITIONS, WALLS, FLOORS AND CEILINGS IN AREAS THAT ARE AFFECTED BY THE WORK. COMPLETELY FIRE-STOP AND SAFE NEW OPENINGS CREATED AS A RESULT OF DEMOLITION OR REMOVAL.

GENERAL NOTES CONT.

GENERAL NOTES
1. THE SCOPE FOR THE NEW WORK IS SHOWN ON DRAWINGS AG.001 - E4.00 (SEE INDEX OF DRAWINGS ON SHEET G0.02).

2. IF UNANTICIPATED ARCHITECTURAL, MECHANICAL, ELECTRICAL, PLUMBING OR OTHER ELEMENTS CONFLICT, REPORT THE NATURE AND EXTENT OF CONFLICT TO THE GENERAL CONTRACTOR/ CONSTRUCTION MANAGER AND COPY THE ARCHITECT IN WRITTEN ACCURATE DETAIL PRIOR TO PROCEEDING. PENDING RECEIPT OF INSTRUCTIONS, CONTRACTOR SHALL REARRANGE SCHEDULE TO MAINTAIN PROGRESS.

3. CONTRACTOR SHALL COORDINATE WORK WITH ALL TRADES.

4. THE CONTRACTOR SHALL COMPLY WITH ALL RULES AND REGULATIONS OF BUILDING MANAGEMENT, THE GSA, THE DC DEPARTMENT OF REGULATORY AFFAIRS, AND ALL OTHER AGENCIES HAVING JURISDICTION CONCERNING WORKING HOURS, RUBBISH REMOVAL, ETC.

5. CONSTRUCTION OPERATIONS SHALL BE CONFINED TO WORKING HOURS AS AUTHORIZED BY THE OWNER (DISTRICT OF COLUMBIA SUPERIOR COURT).

6. SCHEDULE ELEVATOR HOURS OF OPERATION, DUMPSTER AND HOIST LOCATIONS, ACCESS TO AND FROM WORK AREA, AND EXIT ROUTE WITH BUILDING MANGER IN ADVANCE OF WORK. MAINTAIN PROPER EGRESS IN ALL AREAS OF THE BUILDING (SEE SHEET G0.05 FOR TEMPORARY EGRESS AND PHASING PLANS).

7. CONSTRUCTION WORK SHALL BE CONFINED TO THE AREAS DESIGNATED. NOISE PRODUCING OPERATIONS SHALL BE KEPT TO A MINIMUM DURING DC COURT HOURS OF OPERATION (9AM TO 5PM MON. THROUGH FRIDAY).

8. CONSTRUCTION WORK AREA SHALL BE ACCESSED VIA THE FIRST FLOOR PASSAGE 4TH STREET, NW (SEE VICINITY SITE PLAN THIS SHEET). CONTRACTOR SHALL PROTECT ALL AREAS OF THE BUILDING UTILIZED FOR ACCESS TO AND FROM THE CONSTRUCTION AREA.

9. SEPARATE PUBLIC ACCESS SHALL BE MAINTAINED AT THE WEST SIDE ENTRANCE (SEE PLANS ON SHEET G0.05).

10. ALL EXISTING MEANS OF EGRESS FOR TENANTS OF THE BUILDING AND CONTRACTORS SHALL BE MAINTAINED CLEAR AND FREE OF ALL OBSTRUCTIONS AT ALL TIMES. MAINTAIN EMERGENCY EGRESS DURING DEMOLITION (SEE SHEET G0.05 FOR TEMPORARY EGRESS AND PHASING PLANS).

11. THE CONTRACTOR SHALL MAINTAIN COMPLETE AND UP-TO-DATE DRAWINGS AT THE JOB SITE.

12. CONTRACTOR SHALL PERFORM A SITE VISIT AND FIELD-VERIFY ALL CONDITIONS PRIOR TO COMMENCEMENT OF THE WORK. CONTRACTOR TO REPORT ANY DISCREPANCIES TO THE ARCHITECT PRIOR TO THE START OF WORK.

13. CONTRACTOR SHALL PROVIDE, ERECT, AND MAINTAIN ALL TEMPORARY BARRIERS AND GUARDS, AND ALL TEMPORARY SHORING AND BRACING AS REQUIRED BY THE DC DEPT. OF REGULATION AFFAIR. NO STRUCTURAL ELEMENTS SHALL BE REMOVED UNLESS PORTIONS AFFECTED ARE ADEQUATELY SUPPORTED BY EITHER TEMPORARY OR NEW STRUCTURAL ELEMENTS AS REQUIRED TO PROTECT THE STABILITY AND INTEGRITY OF THE STRUCTURE.

14. OWNER SHALL PROVIDE REQUIRED SIGNATURES AND ASSISTANCE TO FILE THE REQUIRED APPLICATIONS TO COMPLETE THE WORK. CONTRACTOR SHALL PAY THE REQUIRED PERMIT FEES AND OBTAIN ALL NECESSARY PERMITS REQUIRED TO COMPLETE THE PROPOSED WORK.

15. ARCHITECT IS NOT RESPONSIBLE FOR ANY FINAL INSPECTIONS OR SIGN-OFFS ON CERTIFICATION OF COMPLETED INSPECTIONS. CONTRACTOR SHALL PROVIDE ALL REQUIRED INSPECTIONS AND CERTIFIED INSPECTION SIGNAGE.

16. RELOCATE ALL WIRING, PLUMBING, DEVICES AND MECHANICAL EQUIPMENT AFFECTED BY THE WORK AS NECESSARY FOR THE NEW WORK. SEE M.E.P. AND FIRE ALARM DRAWINGS.

17. WHERE INDICATED AND/OR REQUIRED, CAREFULLY REMOVE EQUIPMENT AND FURNISHINGS AND RETURN TO OWNER UNLESS OTHERWISE DIRECTED. FOR EQUIPMENT AND FURNISHINGS INDICATED TO BE REMOVED AND REINSTALLED, THE CONTRACTOR SHALL BE RESPONSIBLE TO STORE ITEMS IN A CLEAN AND SAFE ENVIRONMENT.

18. HAZARDOUS MATERIAL REMOVAL AND ABATEMENT IS NOT PART OF THIS SCOPE OF WORK. IF ASBESTOS CONTAINING MATERIALS ARE ENCOUNTERED OR SUSPECTED, NOTIFY OWNER AND BUILDING MANAGEMENT IMMEDIATELY. CEASE WORK IN THE AFFECTED AREA UNTIL BUILDING MANAGEMENT/OWNER ISSUES INSTRUCTION TO RESUME WORK, WHICH SHALL BE GIVEN IN A REASONABLE TIME.

19. DO NOT USE CUTTING TORCHES FOR REMOVALS WITHOUT PROPER PERMITS, SAFETY, PRECAUTIONS AND PERMISSION FROM OWNER.

20. ALL WORK SHALL BE DONE CAREFULLY AND NEATLY, IN A SYSTEMATIC MANNER.

21. THE CONTRACTOR SHALL PROTECT ALL AREAS OUTSIDE THE CONTRACT LIMITS AND RESTORE ALL SUCH PROPERTY TO ITS CONDITION PRIOR TO THE START OF THE WORK.

22. THE CONTRACTOR SHALL RESTORE THE INTEGRITY OF ALL FIRE RATED ASSEMBLIES WHICH ARE DAMAGED DURING CONSTRUCTION. DAMAGED ASSEMBLIES SHALL BE RESTORED TO COMPLY WITH THE VALUE AND CONSTRUCTION ASSEMBLY SPECIFIED IN APPLICABLE CODES.

23. ALL EXISTING CONSTRUCTION, FINISHES AND EQUIPMENT TO REMAIN SHALL BE FULLY PROTECTED FROM DAMAGE. IF THE EXISTING CONSTRUCTION TO REMAIN IS IN ANY WAY DISTURBED, WEAKENED OR DAMAGED DUE TO THE CONTRACTOR'S WORK, THE CONTRACTOR AT NO EXTRA EXPENSE TO THE OWNER SHALL RESTORE IT TO ITS ORIGINAL CONDITION.

24. PREVENT DAMAGE TO STRUCTURAL ELEMENTS, FIREPROOFING, STEEL, AND BUILDING UTILITY LINES.

25. PROTECT AND MAINTAIN THE INTEGRITY OF ALL EXISTING PERIMETER PARTITIONS U.O.N.

26. PROTECT AND MAINTAIN THE INTEGRITY OF PARTITIONS AT ALL EXISTING STAIRS, SHAFTS AND ELEVATOR ENCLOSURES.

27. MAINTAIN EXISTING UTILITIES. DO NOT INTERRUPT EXISTING BUILDING UTILITIES UNLESS AUTHORIZED IN WRITING BY THE BUILDING MANAGER OR OWNER

28. THE CONTRACTOR SHALL PROVIDE ADEQUATE WEATHER PROTECTION FOR THE BUILDING AND ITS CONTENTS DURING THE COURSE OF THE WORK. ALL OPENINGS SHALL BE PROTECTED FROM ALL FORMS OF WEATHER OR WATER PENETRATION.

29. ALL BUILDING MATERIALS IN THE CONSTRUCTION AREA OR IN ANY AREA OF THE BUILDING SHALL BE SECURED IN A LOCKED AREA. ACCESS TO SUCH AREA IS TO BE CONTROLLED BY THE OWNER AND/OR GENERAL CONTRACTOR.

30. KEEP PASSAGEWAYS AND EXTERIOR SPACES CLEAN CONTINUOUSLY. NO DEBRIS SHALL BE ALLOWED TO ACCUMULATE ON THE SITE. DEBRIS SHALL BE REMOVED BY THE CONTRACTOR AS THE JOB PROCEEDS. LEGALLY DISPOSE OF MATERIALS OFF-SITE. THE SITE SHALL BE LEFT BROOM CLEAN AT THE COMPLETION OF DEMOLITION.

31. WRITTEN DIMENSIONS ON THESE DRAWINGS SHALL HAVE PRECEDENCE OVER SCALED DIMENSIONS. CONTRACTOR SHALL VERIFY AND BE RESPONSIBLE FOR ALL DIMENSIONS AND CONDITIONS ON THE JOB. THE ARCHITECT MUST BE NOTIFIED OF ANY VARIATIONS FROM THE DIMENSIONS AND CONDITIONS SHOWN BY THESE DRAWINGS.

32. CONTRACTOR SHALL VERIFY EXACT LOCATION OF ALL UTILITIES AND ALIGNMENT REFERENCES PRIOR TO CONSTRUCTION UNLESS NOTED OTHERWISE, ALL UTILITIES ARE EXISTING.

33. SEQUENCE THE DEMOLITION WORK SO AS TO CAUSE AS LITTLE DISRUPTION TO OCCUPIED SPACES AS POSSIBLE.

34. THE BUILDING, THE AREA OF THE WORK, AND PARTICULARLY THE ADJACENT SPACES WILL BE OCCUPIED DURING THE COURSE OF THE WORK. THE CONTRACTOR SHALL ENSURE THE SAFE PASSAGE OF PERSONS AROUND THE AREA OF DEMOLITION AND SHALL CONDUCT OPERATIONS SO AS TO PREVENT INJURIES TO PERSONS OR DAMAGE TO EXISTING CONSTRUCTION WHICH IS TO REMAIN. BUILDING OCCUPANTS SHALL BE ABLE TO CONDUCT ONGOING BUSINESS DURING THE COURSE OF THE WORK WITHOUT INTERRUPTION.

35. THE CONTRACTOR SHALL BE RESPONSIBLE FOR THE INTEGRITY OF THE BUILDING AND STRUCTURAL, MECHANICAL, ELECTRICAL, PLUMBING AND FIRE AND LIFE SAFETY CONDITIONS AS IT RELATES TO THEIR CONTRACT DURING THE WORK.

36. CLEAN AREAS NOT IN CONTRACT OF DUST, DIRT AND DEBRIS CAUSED BY DEMOLITION OPERATIONS. RETURN THESE AREAS TO CONDITIONS EXISTING PRIOR TO THE START OF THE WORK.

37. COORDINATE ALL WORK WITH THE OWNER, THE TENANTS AND ANY OTHER CONTRACTORS WHO ARE AFFECTED BY THE WORK TO THE GREATEST EXTENT POSSIBLE

38. CONTRACTOR SHALL PROVIDE OWNER WITH 48 HOUR PRIOR WRITTEN NOTIFICATION TO ANY UTILITY OUTAGES.

39. ENVIRONMENTAL CONSIDERATIONS: ANY CONSTRUCTION MATERIALS, EQUIPMENT OR CONSTRUCTION PROCEDURE THAT WOULD HAVE AN UNDULY ADVERSE EFFECT ON THE ENVIRONMENT (PARTICULARLY WITH RESPECT OT INDOOR AIR QUALITY, OZONE DEPLETION, OR EXCESSIVE CONSUMPTION OF ENERGY AND OF RESOURCES IN LIMITED SUPPLY) SHALL NOT BE EMPLOYED IN THIS PROJECT. CARE SHALL BE TAKEN TO MAKE USE OF CONSTRUCTION MATERIALS AND FINISHES (PAINTS, ADHESIVES, CAULKS, FABRICS, ETC.) THAT EMIT THE LOWEST QUANTITIES OF VOLATILE ORGANIC COMPOUNDS (VOC'S) AND PARTICULATES ON THE MARKET. THE USE OF CONSTRUCTION MATERIALS AND PRODUCTS MADE FROM RECYCLED MATERIALS IS ENCOURAGED.

ARCHITECTURAL KEYNOTES

AK-01	ALIGN
AK-02	NOT IN CONTRACT
AK-03	EXISTING CONSTRUCTION/EQUIPMENT TO REMAIN UNO.
AK-04	REMOVE EXISTING CONSTRUCTION/EQUIPMENT. STORE FOR REUSE OR DISPOSE OF, TOGETHER WITH ALL MATERIAL INCIDENTAL THERETO, AS DIRECTED BY THE OWNER.
AK-05	REMOVE EXISTING CONSTRUCTION TO THE MINIMUM EXTENT REQUIRED FOR THE INSTALLATION OF WORK INDICATED BY THE ARCHITECTURAL PLAN.
AK-06	EXISTING FINISHES TO REMAIN UNO - CAREFULLY PROTECT FINISHES TO REMAIN THROUGHOUT THE COURSE OF THE WORK.
AK-07	REMOVE CARPET, PAD & NAILER STRIPS DOWN TO TILE OR CONCRETE SUBSTRATE.
AK-08	DISCONNECT AND REMOVE EXISTING POWER/DATA/ TELEPHONE FLOOR DEVICES AND DISPOSE OF, TOGETHER WITH ALL MATERIALS INCIDENTAL THERETO. PACK REMAINING HOLE WITH SAFB AND SEAL TO FLUSH WITH SLAB WITH A MINIMUM OF 1-1/2" FIRE SAFING COMPOUND FOR 2 HOUR F.R. RATING.
AK-09	DISCONNECT AND REMOVE EXISTING POWER/DATA/ TELEPHONE DEVICES AND DISPOSE OF TOGETHER WITH ALL MATERIAL INCIDENTAL THERETO, AS DIRECTED BY THE OWNER.
AK-10	REMOVE EXISTING SUSPENDED CEILING ASSEMBLY, TOGETHER WITH ALL MATERIALS INCIDENTAL THERETO, AND DISPOSE OF AS DIRECTED BY THE OWNER.
AK-11	EXISTING SUSPENDED CEILING GRID TO REMAIN. REPLACE DAMAGED COMPONENTS WITH NEW TO MATCH EXISTING.
AK-12	EXISTING CEILING TILES LAMINATED TO UNDERSIDE OF DECK TO REMAIN - ABANDON IN PLACE.
AK-13	DISCONNECT AND REMOVE EXISTING PENDANT LIGHT FIXTURES.
AK-14	DISMANTLE AND RECONFIGURE EXISTING SUSPENDED FLUORESCENT LUMINAIRES TO THE MINIMUM EXTENT REQUIRED FOR THE INSTALLATION OF NEW WORK.
AK-15	DISCONNECT EXISTING BULKHEAD MOUNTED RECESSED LIGHT FIXTURES - ABANDON IN PLACE.
AK-16	REMOVE EXISTING WOOD PANELING AND STORE FOR REUSE - SEE ALSO GENERAL DEMOLITION NOTE #15.
AK-17	CLEAN, REPAIR AND REFINISH EXISTING WOOD PANELING, TRIM AND BULKHEADS TO MATCH ORIGINAL INSTALLATION. SEE GENERAL FINISH NOTES #20.
AK-18	LIMIT OF SYSTEMS FURNITURE WORKSTATIONS.
AK-19	REMOVE AREA @ CONC. SLAB FOR NEW SHAFT OPENING. TEMPORARY FIRE STOP AS REQUIRED. REFER TO STRUCTURAL DRAWINGS FOR MORE INFORMATION.
AK-20	PROVIDE INFILL PARTITION TO MATCH EXISTING - VIF WHERE INFILLING FROM A PREVIOUSLY EXISTING DOOR, REMOVE FRAME AND MAKE OPENING CLEAN TO RECEIVE NEW CONSTRUCTION - USE FIRE RATED CONSTRUCTION AS REQUIRED TO MATCH RATING OF ADJACENT WALL.
AK-21	GYPSUM BOARD BULKHEAD - PAINT
AK-22	GYPSUM BOARD BORDER - PAINT
AK-23	REVEAL MOLDING - PAINT
AK-24	LOW PARTITION/DIVIDER WITH WOOD CAP
AK-25	BUILT-IN WORKSURFACE
AK-26	GROMMET WITH ROTATING TOP - SIM. TO "HAFELE" MOD. # 631.26.302, 80MM, BLACK

ARCHITECTURAL KEYNOTES

AK-27	RESERVED
AK-28	PROVIDE REDUCER STRIP AS REQUIRED
AK-29	SEAL EXISTING DOOR IN PLACE
AK-30	REMOVE EXISTING CONSTRUCTION SURROUNDING JUDGE'S BENCH. CAREFULLY PROTECT FINISHES (JUDGE'S BENCH) THROUGH OUT THE COURSE OF WORK. REPAIR OR REPLACE ALL FINISHES DAMAGED AS A RESULT OF THE WORK SO AS TO BE INDISTINGUISHABLE FROM "LIKE-NEW" CONDITIONS.
AK-31	REMOVE EXISTING JUDGE'S BENCH. CAREFULLY PROTECT FINISHES (JUDGE'S BENCH) THROUGH OUT THE COURSE OF WORK. STORE FOR REUSE OR DISPOSE OF, TOGETHER WITH ALL MATERIAL INCIDENTAL THERETO, AS DIRECTED BY THE OWNER.
AK-32	REMOVE EXISTING RAISED FLOOR TO THE MINIMUM EXTENT REQUIRED FOR THE INSTALLATION OF WORK INDICATED BY THE ARCHITECTURAL PLAN.
AK-33	SUSPENDED GYPSUM BOARD CEILING
AK-34	EXISTING CEILING ASSEMBLY TO REMAIN. REPAIR, REPLACE, OR RESET EXISTING CEILING TILES TO THEIR ORIGINAL POSITION. SCRAPE ALL PEELING PAINT AND REPAIR ALL DAMAGED SURFACES TO PRESENT AN ACCEPTABLE SUBSTRATE FOR NEW FINISHES TO BE APPLIED - SEE FINISH PLAN.
AK-35	CLEAN, REPAIR AND RELAMP EXISTING BASE BUILDING LUMINARIES - RETURN TO OPERABLE CONDITION.
AK-36	DECORATIVE LAYERED GYPSUM BOARD.
AK-37	INSTALL WOOD PANELING OVER THE INDICATED AREA TO MATCH ADJACENT PANELING - USE SALVAGED STOCK FROM SECOND FLOOR WHERE POSSIBLE.
AK-38	HIGH DENSITY FILING SYSTEM - PROVIDE STRUCTURAL REINFORCING TO SLAB AS REQUIRED TO ACCOMMODATE SYSTEM - VERIFY - FILING SYSTEM CONTACT = BILL MACKO, NATIONAL OFFICE SYSTEMS, GAITHERSBURG, MD - 301/840-6264
AK-39	CLERK'S/COURT REPORTER'S BENCH
AK-40	COURT RAIL - SEE DETAILS AND COORDINATE WITH MANUFACTURER FOR INSTALLATION REQUIREMENTS.
AK-41	EXISTING JUDGE'S BENCH TO REMAIN - CLEAN, REPAIR AND REFINISH AS REQUIRED TO RESTORE TO "LIKE-NEW" CONDITION - SEE ALSO GENERAL FINISH NOTE #20.
AK-42	CASED OPENING - REPAIR AND REFINISH AFTER REMOVAL OF EXISTING DOORS. REMOVE STOPS. RE-LINE JAMB AND HEAD WITH 1/2" STAIN GRADE DIMENSIONAL LUMBER. REMOVE FLOOR PIVOTS/BOXES/ FLUSH BOLT RECEPTOR AND REPLACE STONE AT FLOOR WITH NEW TO MATCH EXISTING.
AK-43	EXISTING JUDGE'S BENCH TO REMAIN - PROVIDE NEW ENCLOSURE: 5/8" GYPSUM BOARD ON 3-5/8" STEEL STUDS @ 16" O.C. MAX TO 7'-0" AFF - CAP WITH GYPSUM BOARD
AK-44	OBSERVATION WINDOW IN HOLLOW METAL FRAME WITH 9/16" BREAK RESISTANT GLASS - ALIGN TOP OF HEAD WITH TOP OF DOOR FRAMES - SILL HEIGHT = 36" AFF - WIDTH AS INDICATED - PAINT
AK-45	EXISTING TOILET ROOM FIXTURES AND ACCESSORIES IN PUBLIC AND PRIVATE TOILETS TO REMAIN - CLEAN AND REPAIR AS REQUIRED TO RESTORE NORMAL OPERATION WHERE NECESSARY - REMOVE ACCESSORIES AS NEEDED TO INSTALL NEW FINISHES AND REPLACE AFTER INSTALLATION.
AK-46	10"W. X 8"H. FLUORESCENT LIGHT COVE. SEE LIGHTING SCHEDULE FOR MORE INFORMATION
AK-47	2 HOUR RATED CEILING ASSEMBLY
AK-48	INSTALL BALLISTIC MATERIAL AROUND THE INSIDE PERIMETER OF THE JUDGE'S BENCH AND GUARD'S DESK AS INDICATED. TEMPORARILY REMOVE EQUIPMENT OR OTHER OBSTACLES AND REINSTALL AS REQUIRED TO PROVIDE FULL COVERAGE FOR THE AREA SHOWN. FULLY COVER BALLISTIC MATERIAL WITH 1/2" A-D PLYWOOD AND PAINT TO MATCH SURROUNDING SURFACES.
AK-49	REMOVE CONVECTOR COVER AND PROTECT SURROUNDING CONSTRUCTION & FINISHES TO REMAIN.
AK-50	REMOVE CEILING & ASSOCIATED CONSTRUCTION AS INDICATED.
AK-51	REMOVE CONVECTOR (SEE MECH./PLUM. DEMOLITION DWGS.)
AK-52	REMOVE SHELVING.
AK-55	SEE ELECTRICAL PLANS FOR POWER/DATA INFORMATION

STANDARD ABBREVIATIONS

A	
AB	ANCHOR BOLT
ABS	ACRYLONITRILE-BUTADIENE-STYRENE
AC	ALTERNATING CURRENT
A/C	AIR CONDITIONING
ACP	ASBESTOS CEMENT PIPE
AD	AREA DRAIN
ADJ	ADJACENT OR ADJUSTABLE
ADR	ACCESS DOOR
AFF	ABOVE FINISH FLOOR
AHU	AIR HANDLING UNIT
AL	ALUMINUM
ALT	ALTERNATE
APPROX	APPROXIMATELY
APT	APARTMENT
ARCH	ARCHITECT(URAL)
ASPH	ASPHALT
ATB	AIR TERMINAL BOX
ATC	ACOUSTICAL TILE CEILING
AUX	AUXILIARY
AVG	AVERAGE
AZ	AZIMUTH
B	
BB	BALLED AND BURLAPPED
BD	BOARD
BL	BUILDING LINE
BLDG	BUILDING
BLKG	BLOCKING
BM	BENCH MARK OR BEAM
BR	BARE ROOT
BRG	BEARING
BTU	BRITISH THERMAL UNIT
C	
CP	CEMENT PIPE
C	CONDUIT
CAB	CABINET
CB	CIRCUIT BREAKER OR CATCH BASIN
CC	COOLING COIL
C/C	CENTER TO CENTER
CDU	CONDENSING UNIT
CE	COVER ELEVATION
CEM	CEMENT
CFM	CUBIC FEET PER MINUTE
CFS	CUBIC FEET PER SECOND
CG	CORNER GUARD
CH	CHILLER
CI	CURB INLET OR CAST IRON
CIP	CAST IRON PIPE
CJ	CONTROL JOINT
CKT	CIRCUIT
CL	CENTER LINE
CLG	CEILING
CLO	CLOSET
CLR	CLEAR
CM	CENTIMETER
CMH	CUBIC METER PER HOUR
CMP	CORRUGATED METAL PIPE
CMT	CERAMIC MOSAIC TILE
CMU	CONCRETE MASONRY UNIT
CO	CLEANOUT
COL	COLUMN
COMB	COMBINATION OR COMBINE
COMP	COMPRESSIBLE
CONC	CONCRETE
CONN	CONNECTION
CONST	CONSTRUCTION
CONT	CONTINUOUS OR CONTINUATION
CONTR	CONTRACTOR
CORR	CORRIDOR
CPT	CARPET
CT	CERAMIC TILE
CTR	CENTER
CUH	CABINET UNIT HEATER
CUYD	CUBIC YARD
D	
DIFF	DIFFUSER
DBL	DOUBLE
DEPR	DEPRESSED
DET	DETAIL
DF	DRINKING FOUNTAIN
DIA	DIAMETER
DIAG	DIAGONAL
DIP	DUCTILE IRON PIPE
DISC	DISCONNECT
DISP	DISPENSER
DIST	DISTRIBUTION
DK	DECK
DL	DEAD LOAD
DN	DOWN
DO	DITTO
DR	DOOR
DS	DOWNSPOUT
DWG	DRAWING
DWL	DOWEL
DWP	DOMESTIC WATER PUMP
E	
EA	EACH
EF	EACH FACE OR EXHAUST FAN
EJ	EXPANSION JOINT
EL	ELEVATION
ELEC	ELECTRIC (AL)
ELEV	ELEVATOR
EMBED	EMBEDMENT
EMD	ESTIMATED MAXIMUM DEMAND
EMT	ELECTRICAL METAL TUBING
EQ	EQUAL
EQUIP	EQUIPMENT
EW	EACH WAY
EWC	ELECTRIC WATER COOLER
EWH	ELECTRIC WATER HEATER
EXH	EXHAUST
EXIST	EXISTING
EXP	EXPOSED
EXPN	EXPANSION
EXT	EXTERIOR
F	
FA	FIRE ALARM
FCU	FAN COIL UNIT
FD	FLOOR DRAIN OR FIRE DAMPER
FDN	FOUNDATION
FDR	FEEDER
FE	FIRE EXTINGUISHER
FEC	FIRE EXTINGUISHER CABINET
FH	FIRE HYDRANT
FHC	FIRE HOSE CABINET
FIN	FINISH
FIX	FIXTURE
FL	FLOOR
FM	FORCE MAIN
FP	FIREPROOFING
FR	FIRE RATED
FRP	FIBERGLASS REINFORCED PLASTIC
FT	FEET
FTG	FOOTING
FVC	FIRE VALVE CABINET
G	
GA	GAGE
GALV	GALVANIZED
GB	GRAB BAR
GEN	GENERATOR
GI	GALVANIZED IRON
GL	GLASS
GLB	GLASS BLOCK
GP	GLAZED PAINT
GPM	GALLONS PER MINUTE
GR	GRADE
GFRC	GLASS FIBER REINFORCED CONCRETE
GWB	GYPSUM WALLBOARD
GYP	GYPSUM
H	
HB	HOSE BIBB
HC	HEATING COIL
HDCP	HANDICAP (PED)
HDNR	HARDENER
HDW	HARDWARE
HDWD	HARDWOOD
HK1E	HOOK ONE END
HK2E	HOOK TWO ENDS
HM	HOLLOW METAL
HORIZ	HORIZONTAL
HP	HORSEPOWER
HPT	HIGH POINT
HR	HOUR
HS	HIGH STRENGTH
HT	HEIGHT
HTG	HEATING
HTR	HEATER
HVAC	HEATING/VENTILATING/AIR CONDITIONING
HZ	HERTZ
I	
IC	INTERCOM
ID	INSIDE DIAMETER
IE	INVERT ELEVATION
IF	INSIDE FACE
IN	INCH
INSUL	INSULATION
INT	INTERIOR
J	
JAN	JANITOR
JB	JUNCTION BOX
JST	JOIST
JT	JOINT
K	
KCJ	KEYED CONSTRUCTION JOINT
KCMIL	THOUSAND CIRCULAR MILS
KIT	KITCHEN
KS	KITCHEN SINK
KV	KILOVOLT
KVA	KILOVOLT AMPERE
KW	KILOWATTS
L	
LAB	LABORATORY
LAM	LAMINATE
LAV	LAVATORY
LBS	POUNDS
LF	LINEAR FEET
LIN	LINEAR
LL	LIVE LOAD
LLH	LONG LEG HORIZONTAL
LLV	LONG LEG VERTICAL
LMU	LIGHTWEIGHT MASONRY UNITS
LONG	LONGITUDINAL
LT	LIGHT
LTG	LIGHTING
LT WT	LIGHT WEIGHT
LVL	LEVEL
M	
M	METER
M2	SQUARE METER
M3	CUBIC METER
MAINT	MAINTENANCE
MAR	MARBLE
MAS	MASONRY
MAT	MATERIAL
MAX	MAXIMUM
MDO	MEDIUM DENSITY OVERLAY
MECH	MECHANICAL
MET	METAL
MFR	MANUFACTURE
MG	MOTOR GENERATOR
MH	MANHOLE
MIN	MINIMUM
MLO	MAIN LUGS ONLY
MM	MILLIMETER
MO	MASONRY OPENING
MTG	MOUNTING OR MOUNTED
MULL	MULLION
N	
NEC	NATIONAL ELECTRICAL CODE
NO	NUMBER
NOM	NOMINAL
NIC	NOT IN CONTRACT
NTS	NOT TO SCALE
O	
OA	OUTSIDE AIR
OC	ON CENTER
OD	OUTSIDE DIAMETER
OF	OUTSIDE FACE
OPNG	OPENING
OPP	OPPOSITE
O/S	OFFSET
OZ	OUNCE
P	
P	PAINT OR PUMP OR PENDANT
PA	PASCAL
PART	PARTITION
PAVT	PAVEMENT
PC	POINT OF CURVATURE
PCF	POUNDS PER CUBIC FOOT
PED	PEDESTAL
PERP	PERPENDICULAR
PHC	PREHEAT COIL
PHVAC	PLUMBING, HEATING, VENTILATING AND AIR CONDITIONING
PI	POINT OF INTERSECTION
PIV	POST INDICATOR VALVE
PKG	PARKING
PL	PROPERTY LINE OR PLATE
PLAM	PLASTIC LAMINATE
PLAS	PLASTER
PLBG	PLUMBING
PLF	POUNDS PER LINEAR FOOT
PLYWD	PLYWOOD
PNL	PANEL
PR	PAIR
PROJ	PROJECTION
PRV	PRESSURE REGULATING VALVE
PSF	POUNDS PER SQUARE FOOT
PSI	POUNDS PER SQUARE INCH
PT	PAINT
PTVC	POINT OF VERTICAL CURVATURE
PVC	POLYVINYL CHLORIDE
PVI	POINT OF VERTICAL INTERSECTION
PVT	POINT OF VERTICAL TANGENCY
Q	
QT	QUARRY TILE
R	
R	RADIUS
REG	REGISTER
RA	RETURN AIR
RB	RESILIENT BASE
RCP	REINFORCED CONCRETE PIPE
RD	ROOF DRAIN
REF	REFERENCE
REFL	REFLECTED
REINF	REINFORCING
REQD	REQUIRED
REV	REVERSE
RF	RETURN FAN
RGS	RIGID GALVANIZED STEEL
RH	ROOF HOOD
RHC	REHEAT COIL
RM	ROOM
RO	ROUGH OPENING
ROW	RIGHT OF WAY
S	
S	STAIR OR STAIN OR SURFACE
SA	SUPPLY AIR OR SOUND ATTENUATOR
SAN	SANITARY
SCH	SCHEDULE
SECT	SECTION
SF	SUPPLY FAN
SHT	SHEET
SIM	SIMILAR
SK	SINK
SOG	SLAB-ON-GRADE
SP	SUMP PUMP
SPEC	SPECIFICATIONS
SQ	SQUARE
SS	SERVICE SINK
SSTL	STAINLESS STEEL
STA	STATION
STD	STANDARD
STE	STANDARD TAPERED END
STIFF	STIFFENER
STIR	STIRRUP
STL	STEEL
STOR	STORAGE
STR	STRUCTURAL
SUSP	SUSPENDED
SW	SWITCH
SWGR	SWITCHGEAR
SYM	SYMMETRICAL
T	
T	TREAD
T&B	TOP AND BOTTOM
T&G	TONGUE AND GROOVE
TC	TOP OF CURB
TEL	TELEPHONE
TEMP	TEMPERATURE
TERR	TERRAZZO
TOIL	TOILET
TOPO	TOPOGRAPHY
TOS	TOP OF STEEL
TOW	TOP OF WALL
TP	TOP OF PAVEMENT
TRANS	TRANSVERSE
TYP	TYPICAL
U	
UC	UNDERCUT
UG	UNDERGROUND
UH	UNIT HEATER
UV	UNIT VENTILATOR
UR	URINAL
V	
V	VOLT
VB	VINYL BASE
VC	VERTICAL CURVE
VCP	VITRIFIED CLAY PIPE
VCT	VINYL COMPOSITION TILE
VERT	VERTICAL
VEST	VESTIBULE
VFD	VARIABLE FREQUENCY DRIVE
VTR	VENT THROUGH ROOF
VWC	VINYL WALL COVERING
W	
W	WATT
W/	WITH
WC	WATER CLOSET OR WALL COVERING
WD	WOOD
WDW	WINDOW
WH	WATER HEATER
W/O	WITHOUT
WP	WEATHERPROOF
WPFG	WATERPROOFING
WS	WATER STOP
WT	WEIGHT
WWF	WELDED WIRE FABRIC
X	EXISTING
XFMR	TRANSFORMER
Y	
YD	YARD
YH	YARD HYDRANT

Interior Improvements to DC Superior Courts Building 'B'
409 E Street, NW
Washington, DC 20001

U.S. General Services Administration
301 7th Street, SW, Room 2021
Washington, DC 20407

LEO A DALY — PLANNING ARCHITECTURE ENGINEERING INTERIORS — EST. 1915
1201 Connecticut Ave, NW
Washington DC 20036 USA
Tel 202-861-4600 Fax 202-872-8530

Dalco INCORPORATED
10005 Old Columbia Road Suite L261
Columbia, MD 21046
Tel: 410-290-8827
Fax: 410-290-8812

Contractor
Address

KEY PLAN

ISSUES / REVISIONS

NO.	DESCRIPTION	DATE

FILE LOG

ACTIVITY	REFERENCE	BY
Manager		
Design		
Draw		
Draw		
Draw		
Check		

REGISTRATION

JOB No 52010300

CONSTRUCTION PACKAGE

ISSUED FOR CONSTRUCTION (FINAL) APRIL 8, 2003

VICINITY PLAN / GENERAL NOTES / CODE ANALYSIS / SYMBOLS & ABBREVIATIONS / KEYNOTES

G0.03

© Leo A Daly Company 2003

GENERAL ELECTRICAL NOTES

EXCEPT AS MODIFIED BY THE DIRECTION OF GSA, THE FOLLOWING GENERAL ENGINEERING NOTES SHALL APPLY:

1. BRANCH CIRCUIT WIRING TO DEVICES IN AREAS OF DEMOLITION SHALL BE DISCONNECTED, MADE SAFE AND REMOVED COMPLETELY BACK TO THE PANELBOARD. THE CONTRACTOR SHALL NOT ABANDON BRANCH CIRCUIT WIRING IN EXISTING WALLS AND CELLINGS. MAINTAIN THE CONTINUITY OF BRANCH CIRCUIT WIRING TO ANY AREAS WHICH ARE TO REMAIN BUT ARE AFFECTED BY THE DEMOLITION OR NEW CONSTRUCTION.

2. AFTER RENOVATING EXISTING ELECTRICAL WORK, THE SUBCONTRACTOR SHALL INSURE THAT ALL REMAINING AND NEW EQUIPMENT WILL OPERATE PROPERLY.

3. REPLACE EXISTING FIRE ALARM SYSTEM WITH ADDRESSABLE FIRE ALARM SYSTEM. SYSTEM SHALL MEET CURRENT NFPA, ADA AND LOCAL CODES. REPLACE EXISTING FIRE ALARM DEVICES WITH NFPA AND ADA COMPLIANT DEVICES. REPLACE EXISTING FIRE ALARM WIRING WITH NEW WIRING. UTILIZE EXISTING CONDUIT.

4. PROVIDE FIRE ALARM DEVICES AS REQUIRED TO MEET CURRENT NFPA REQUIREMENTS. PROVIDE WIRING AND CONDUIT TO CORRIDOR FOR FUTURE CONNECTION TO FUTURE BUILDING FIRE ALARM SYSTEM. LABEL JUNCTION BOX AND WIRES. ONCE FIRE ALARM SYSTEM IS PROVIDED, CONNECT TO NEW FIRE ALARM SYSTEM.

5. PROVIDE DEVICES, DEVICES BOXES, WIRING AND CONDUIT FOR DEVICES AS REQUIRED TO MEET INTENDED USAGE.

6. PROVIDE WIRING AND CONDUIT TO LIGHTING FIXTURES AS REQUIRED. PROVIDE SWITCHING CONTROL AS REQUIRED TO MEET INTENDED USAGE.

7. EVALUATE POWER DEMAND OF NEW CONSTRUCTION AND EXISTING LOADS. PROVIDE NEW MAIN DISCONNECT SWITCH OR PROVIDE NEW MAIN SWITCHBOARD BASED ON RESULTS OF POWER DEMAND EVALUATION OF EXISTING AND NEW LOADS.

8. PROVIDE ROUTINE MAINTENANCE AND TESTING ON EXISTING GENERATOR. IF NEW FIRE PUMP IS PROVIDED, PROVIDE NEW GENERATOR CAPABLE OF SERVING EXISTING ELEVATOR LOADS AND NEW FIRE PUMP.

9. REPLACE EXISTING PANELBOARDS, FEEDERS AND BRANCH CIRCUITS IN AREAS AFFECTED BY NEW CONSTRUCTION. PROVIDE SUBPANELBOARDS AS REQUIRED TO ACCOMMODATE NEW CONSTRUCTION CIRCUITRY REQUIRMENTS.

10. PROVIDE CIRCUITRY TO NEW PLUMBING EQUIPMENT AS REQUIRED. COORDINATE WITH CONTRACTOR PRIOR TO INSTALLATION.

GENERAL POWER/DATA/TELEPHONE LOCATION NOTES

THE FOLLOWING GENERAL NOTES APPLY TO THE POWER/DATA/TELEPHONE LOCATION PLANS:

1. DUE TO THE SMALL SCALE OF THESE PLANS AND THE INSTABILITY OF THE BLUEPRINT PAPER, THESE DRAWINGS SHOULD NOT BE SCALED AND ANY CRITICAL DIMENSIONS SHOULD BE FIELD VERIFIED.

2. DRAWING DIMENSIONS GOVERN. VERIFY ALL DIMENSIONS AND EXISTING CONDITIONS AT THE JOBSITE AND ADVISE THE ARCHITECT OF ANY DISCREPANCIES, ADDITIONS, DELETIONS AND/OR ALTERATIONS IN ANY OR ALL CONDITIONS BEFORE PROCEEDING WITH ANY PHASE OF THE WORK.

3. INSTALL ALL WALL MOUNTED P/D/T DEVICES VERTICALLY AT 18" A.F.F. TO CENTERLINE OF RECEPTICLE UNLESS NOTED OTHERWISE ON THE PLANS.

4. ELECTRICAL WORK AND MATERIALS SHALL BE IN COMPLIANCE WITH THE NATIONAL ELECTRICAL CODE AND ALL OTHER RELATED CODES IN USE BY THE GOVERNING GOVERNMENT AGENCY(ES) AT THE TIME OF CONSTRUCTION. IN THE EVENT OF A CONFLICT BETWEEN THE AFOREMENTIONED REQUIREMENTS, THE MORE RESTRICTIVE SHALL APPLY.

5. ALL MOUNTING HEIGHTS INDICATED ARE TO THE CENTERLINE(S) OF OUTLET(S), DEVICES(S) OR EQUIPMENT UNLESS NOTED OTHERWISE.

6. OUTLETS, OR OTHER DEVICES, WHICH ARE MOUNTED ON OPPOSITE SIDES OF PARTITIONS SHALL NOT BE MOUNTED BACK TO BACK.

6. LOCATE ALL NEW SWITCHES AT 45" A.F.F. TO CENTER LINE OF SWITCH(ES) IN ACCORDANCE WITH THE ADA ACCESSIBILITY GUIDELINES.

7. INSTALL ALL FIXTURES AND WIRE THOSE REQUIRED TO BE CONNECTED TO EMERGENCY CIRCUITS AND EXIT LIGHTS, BASED ON APPLICABLE CODES, AND REVISE FINAL LOCATION, SUBJECT TO THE FINAL REVIEW OF THE ARCHITECT AND GSA.

8. INSTALL MULTIPLE SWITCH GROUPINGS IN GANG BOXES WITH BARRIERS AND COMMON COVERPLATES.

9. FURNISH AND INSTALL ALL WIRING/SWITCHING, INCLUDING THOSE INCIDENTAL THERETO, TO FIXTURES AND JUNCTION BOXES.

10. NOT USED

11. PROVIDE DISCONNECT AND CONNECTION SERVICES FOR SYSTEMS FURNITURE WORKSTATIONS AS REQUIRED BY THE OWNER.

12. WHERE CORE DRILLING IS REQUIRED FOR POKE-THRU'S OR FLOOR MOUNTED BASEFEEDS, XRAY THE CONCRETE SLAB AT THE INDICATED LOCATION TO VERIFY THAT THE LOCATION TO BE DRILLED IS CLEAR OF OBSTRUCTIONS. IN ADDITION TO STRUCTURAL CONCERNS, THE OWNER HAS INDICATED THAT PNEUMATIC LINES, SERVING THE BASE BUILDING HVAC, ARE PRESENT IN THE SLAB AND ARE TO BE AVOIDED. REPORT FINDINGS OF THE XRAY TO THE OWNER AND THE ARCHITECT PRIOR TO COMMENCING THE WORK.

13. SYSTEMS FURNISHINGS: FURNITURE AND OPEN WORKSTATIONS INDICATED BY THE DESIGN INTENTS DOCUMENTS IS FOR INFORMATION AND COORDINATION PURPOSES ONLY. SAID WORKSTATIONS SHALL BE PROVIDED AND INSTALLED BY DC COURTS SYSTEMS FURNITURE CONTRACTOR COMPLETE WITH INTEGRAL POWERED (8-WIRE) PANELS. COORDINATE WITH DC COURTS FOR FINAL ELECTRICAL CONNECTIONS TO THE WORKSTATIONS.

14. COORDINATE WITH DC COURTS AND THE US MARSHAL'S OFFICE FOR THE PROVISION AND INSTALLATION REQUIREMENTS FOR SECURITY EQUIPMENT.

GENERAL MECHANICAL NOTES

EXCEPT AS MODIFIED BY THE DIRECTION OF GSA, THE FOLLOWING GENERAL ENGINEERING NOTES SHALL APPLY:

1. FOR AREAS UNDERGOING AN ARCHITECTURAL TRANSITION FROM SEPARATED OFFICES TO GENERAL OPEN AREAS: REMOVE ALL EXISTING TRANSITIONAL HVAC EQUIPMENT (WALL FANS, ROOM-TO-ROOM TRANSFER DUCTS, ETC). REPLACE WITH BUILDING STANDARD SUPPLY AND RETURN REGISTERS IN THE CORRIDOR WALL. (CLEAN/REFURBISH EXISTING DIFFUSERS TO REMAIN). SUPPLY NECESSARY DUCTWORK AND REGISTERS TO SERVICE MORE REMOTE PARTS OF THE "OPEN" AREAS VIA CEILING OR WALL CHASE. REBALANCE ENTIRE AREA TO ASSURE PROPER AIRFLOW (THIS MAY INCLUDE REBALANCING THE AIR HANDLING UNITS IN THE BASEMENT IF AIRFLOWS CANNOT BE ACHIEVED AT DUCT BRANCH).

2. FOR AREAS UNDERGOING AN ARCHITECTURAL TRANSITION FROM "OPEN" SPACE TO SEPARATED OFFICES: TAP DUCT RISERS INSIDE CORRIDOR WALL TO PROVIDE SUPPLY AND RETURN BRANCHES TO AREAS THAT ARE NOT IMMEDIATELY ADJACENT TO CORRIDOR WALL. ROUTE NEW DUCTS THROUGH CEILING OR WALL CHASE & TERMINATE AT REGISTERS/GRILLES IN CEILING OR WALL. REBALANCE ENTIRE AREA TO ASSURE PROPER AIRFLOW (THIS MAY INCLUDE REBALANCING THE AIR HANDLING UNITS IN THE BASEMENT IF AIRFLOWS CANNOT BE ACHIEVED AT DUCT BRANCH).

3. ALL NEW DUCTWORK DISTRIBUTION MUST BE INSTALLED WITH INSULATION, PROPER HANGERS, AND VOLUME DAMPERS AT EACH BRANCH. PROVIDE ACCESS PANELS AS NECESSARY FOR DUCT RUNS CONCEALED BY DRYWALL OR PLASTERING.

4. ALL SPACE AIRFLOWS MUST BE DETERMINED BY HEATING & COOLING LOADS PER METHODS IN ASHRAE FUNDAMENTALS 2001, CHAPTERS 29 & 30.

5. CONTRACTOR SHALL PROVIDE DUCTS AND TRANSFER GRILLES AS NECESSARY TO ASSURE RETURN AIR PATHS BACK TO CORRIDOR RETURN AIR RISER. RETURN AIR PATH SHALL ACCUMULATE NO MORE THAN 0.05"W.G. STATIC PRESSURE PER 100' OF LENGTH.

6. NOT USED

7. MECHANICAL DESIGN TO COMPLY WITH 1996 INTERNATIONAL MECHANICAL CODE.

GENERAL PLUMBING AND FIRE PROTECITON

EXCEPT AS MODIFIED BY THE DIRECTION OF GSA, THE FOLLOWING GENERAL ENGINEERING NOTES SHALL APPLY:

1. AREAS BEING ARCHITECTURALLY RENOVATED:
REMOVE EXISTING PLUMBING FIXTURES, EQUIPMENT, PIPING, AND ACCESSORIES NO LONGER REQUIRED, AS PART OF A NEW OR ACTIVE SYSTEM. EXISTING PLUMBING FIXTURES AND EQUIPMENT TO REMAIN, SHALL BE IDENTIFIED IN THE CONTRACT DOCUMENTS. DEMOLISH EXISTING ABANDONED PIPING, NO LONGER REQUIRED, AS PART OF A NEW OR ACTIVE SYSTEM, WHERE PIPING IS ACCESSIBLE DURING CONSTRUCTION.

2. ALL WORK SHALL COMPLY WITH THE REQUIREMENTS OF THE AUTHORITY HAVING JURSDICTION.

3. INSULATE ALL NEW AND EXISTING TO REMAIN HORIZONTAL STORM/CONDENSATE PIPING (ABOVE CEILINGS), AND PRESSURIZED WATER SYSTEM PIPING.

4. PROVIDE NEW PLUMBING SUPPLY (AND RETURN, WHERE APPLICABLE), DRAIN, AND VENT PIPING TO ALL NEW AND EXISTING TO REMAIN FIXTURES, PLUMBING EQUIPMENT, AND MECHANICAL EQUIPMENT AND SYSTEMS REQUIRING PLUMBING SERVICES IN COMPLIANCE WITH CODE AND AUTHORITY REQUIREMENTS. PLUMBING FIXTURES SHALL BE VITREOUS CHINA COMMERCIAL GRADE AND COMPLIANT WITH ADA (ADAAG) WHERE APPLICABLE.

5. PROVIDE NEW VERTICAL WATER, WASTE, AND VENT RISERS WITHIN TOILET ROOMS FOR CONNECTION OF NEW FIXTURE BRANCH PIPING.

6. REMOVE EXISTING TOILET ROOM FIXTURE PLUMBING PIPING.

7. DOMESTIC WATER PIPING SHALL BE TYPE-L COPPER WITH BRASS FITTINGS. SANITARY, STORM, VENT, CONDENSATE PIPING SHALL BE HUB & SPIGOT CAST IRON (OR HUBLESS CAST IRON, OR DWV COPPER ABOVE GRADE).

8. PLUMBING SYSTEMS SHALL COMPLY WITH 1995 INTERNATIONAL PLUMBING CODE, 1996 INTERNATIONAL MECHANICAL CODE, AND THE DISTRICT OF COLUMBIA CONSTRUCTION CODES 1999 SUPPLEMENT. FIRE PROTECTION SYSTEMS SHALL COMPLY WITH THE REQUIRMENTS OF THE DISTRICT OF COLUMBIA AND THE AUTHORITY HAVING JURISDICTION.

GENERAL REFLECTED CEILING NOTES

THE FOLLOWING GENERAL NOTES APPLY TO THE REFLECTED CEILING PLANS:

1. DO NOT SCALE THESE DRAWINGS. FIELD VERIFY ANY DIMENSIONS DEEMED, OR NOTED AS BEING, CRITICAL.

2. VERIFY ALL DIMENSIONS AND EXISTING CONDITIONS AT JOB SITE AND ADVISE THE ARCHITECT & GSA OF ANY DISCREPANCIES, ADDITIONS, DELETIONS AND/OR ALTERATIONS IN ANY OR ALL CONDITIONS BEFORE PROCEEDING WITH ANY PHASE OF THE WORK.

3. UNLESS INDICATED OTHERWISE BY THE DRAWINGS, TYPICAL CEILING HEIGHTS ARE AS FOLLOWS:

A. TYPICAL ACOUSTICAL CEILING HEIGHT WITHIN WORKSPACES: 9'-6" AFF

B. TYPICAL PERIMETER BULKHEAD SOFFIT HEIGHT: 9'-6" AFF

C. TYPICAL ACOUSTICAL CEILING HEIGHT IN MAIN CORRIDORS: 10'-6" AFF

4. UNLESS INDICATED OTHERWISE BY THE DRAWINGS, PROVIDE ALL TOILET ROOMS AND PRIVATE BATHROOMS WITH SUSPENDED 1/2", MOISTURE RESISTANT, GYPSUM BOARD CEILINGS AT HEIGHT INDICATED.

5. UNLESS INDICATED OTHERWISE BY THE DRAWINGS, CENTER ALL ACOUSTICAL CEILINGS IN THE SPACE OR SPACES IN WHICH THEY OCCUR SUCH THAT THE WIDTH OF THE PERIMETER TILES IS GREATER THAN ONE-HALF OF THE WIDTH OF A STANDARD TILE.

6. PLACE ALL HVAC GRILLES WITH DISCRETION AT ALL NICHES OR AREAS WHICH MAY INTERFERE WITH FURNITURE, MILLWORK, OR FIXTURE PLACEMENT. IN CASE OF A DISCREPANCY OR CONFLICT WITH FIXTURE LOCATION, NOTIFY THE ARCHITECT & GSA PRIOR TO PROCEEDING WITH THE WORK.

7. FURNISH AND INSTALL IN QUANTITY AND TYPE ALL LIGHT FIXTURES, DIFFUSERS, GRILLES AND THE LIKE, TOGETHER WITH ALL MATERIALS INCIDENTAL THERETO, AS SHOWN ON THE REFLECTED CEILING PLAN, UNO. LOCATIONS OF ANY ITEM NOT SHOWN OR SPECIFICALLY LOCATED ON THE REFLECTED CEILING PLANS SHALL BE FIELD COORDINATED WITH THE ARCHITECT & GSA PRIOR TO INSTALLATION.

8. NOT USED

9. NOT USED

11. COORDINATE THE INSTALLATION AND VERIFY THE REQUIRED LOCATION OF ANY/ALL SUPPLEMENTAL MECHANICAL, ELECTRICAL, OR PLUMBING EQUIPMENT. FURNISH AND INSTALL ANY REQUIRED SUPPLEMENTAL STRUCTURE WHICH MAY BE REQUIRED FOR THE SUPPORT OF SAID EQUIPMENT WHETHER SPECIFICALLY NOTED IN PLAN OR NOT.

12. NOT USED

13. IN THE EVENT OF A SUBSTITUTION FOR ANY PRODUCT OR ITEM HEREIN SPECIFIED, SUBMIT THE PROPOSED SUBSTITUTION FOR REVIEW BY THE ARCHITECT AND GSA. SAID SUBSTITUTIONS WILL BE REVIEWED ON AN "OR EQUAL" BASIS. DO NOT PROCEED WITH SUBSTITUTIONS FOR PRODUCTS AND ITEMS HEREIN SPECIFIED WITHOUT NOTIFICATION OF ACCEPTABILITY FROM ARCHITECT.

14. COORDINATE THE INSTALLATION AND VERIFY THE LOCATION OF ALL SUPPLEMENTAL MECHANICAL, ELECTRICAL AND PLUMBING LINES AND EQUIPMENT. REFER TO ENGINEERING DRAWINGS FOR MORE INFORMATION.

15. SUPPLY FINISH TRIM FOR ALL CEILING MOUNTED LUMINAIRES AS SPECIFIED.

16. COORDINATE WITH LIGHT FIXTURE SPECIFICATIONS FOR PROPER INSTALLATION OF ALL INTERIOR FIXTURES.

17. FIXTURES LOCATED IN SUSPENDED CEILING SHALL BE SUPPORTED FROM THE FLOOR ABOVE BY MEANS OF A MINIMUM OF TWO CHAINS PER FIXTURE. EACH CHAIN CAPABLE OF SUPPORTING 100 LBS.

18. MOUNT CEILING RECESSED LUMINARES AND DEVICES AT THE CENTER OF THE CEILING TILE(S) INDICATED UNLESS OTHERWISE NOTED. WHERE CONDITIONS MAKE IT IMPRACTICAL OR IMPOSSIBLE TO LOCATE A LUMINARE OR DEVICE AS INDICATED, NOTIFY AND COORDINATE ANY SUCH OCCURENCES WITH THE ARCHITECT & GSA PRIOR TO THE INSTALLATION OF SAID DEVICES OR ANY MATERIALS WHICH ARE INCIDENTAL THERETO. THIS DIRECTIVE SUPERSEDES ANY DIMENSIONS, GIVEN OR IMPLIED, BY THE PLAN.

19. PERFORM SELECTIVE DEMOLITION AS REQUIRED FOR THE MODIFICATION/INSTALLATION OF EQUIPMENT AND DEVICES WHETHER SPECIFICALLY NOTED IN PLAN OR NOT. RETURN THE SURROUNDING SURFACES AND SUBSTRUCTURE TO "LIKE- NEW" CONDITION, OR REPLACE AS REQUIRED, SO AS TO PROVIDE A SUITABLE SUBSTRATE FOR NEW FINISHES.

GENERAL ARCHITECTURAL NOTES

1. VERIFY ALL DIMENSIONS AND EXISTING CONDITIONS AT JOB SITE AND ADVISE THE ARCHITECT OF ANY DISCREPANCIES, ADDITIONS, DELETIONS AND/OR ALTERATIONS IN ANY OR ALL CONDITIONS BEFORE PROCEEDING WITH ANY PHASE OF THE WORK.

2. DUE TO THE SMALL SCALE OF THE DRAWINGS AND THE INSTABILITY OF THE BLUEPRINT PAPER, DO NOT SCALE THESE DRAWINGS. FIELD VERIFY ANY DIMENSIONS DEEMED, OR NOTED AS BEING, CRITICAL.

3. UNLESS NOTED OTHERWISE, ALL PARTITIONS ARE DIMENSIONED FROM FINISH FACE TO FINISH FACE.

4. FURNISH AND INSTALL FIRE RETARDANT TREATED WOOD BLOCKING AS REQUIRED AT ALL LOCATIONS FOR THE PROPER AND SECURE INSTALLATION OF ALL WALL MOUNTED EQUIPMENT WHETHER SPECIFICALLY NOTED IN THE DRAWINGS OR NOT. SAID EQUIPMENT INCLUDES, BUT IS NOT NECESSARILY LIMITED TO: SIGNAGE, DISPLAY FIXTURES, CABINETRY, LIGHTING, AND OTHER EQUIPMENT AS MAY BE INDICATED BY THE ARCHITECTURAL AND ENGINEERING DRAWINGS.

5. WHERE ELECTRICAL AND PLUMBING FIXTURES, OR OTHER RELATED EQUIPMENT, OCCUR IN MILLWORK, PROVIDE ROUGH-INS AND STUB-INS FOR THESE ITEMS AND COORDINATE THE WORK TO ASSURE PROPER LOCATION AND INSTALLATION.

6. SUPPLY ALL FRAMES, DOORS, AND HARDWARE AND INSTALL IN ACCORDANCE WITH MANUFACTURER'S SPECIFICATIONS. REFER TO THE FINISH PLAN FOR DOOR AND FRAME FINISHES.

7. INSTALL HARDWARE IN ACCORDANCE WITH MANUFACTURER'S SPECIFICATIONS, USING PROPER TEMPLATES AND INSTRUCTION SHEETS.

8. ALL WALLS SHALL BE PREPARED TO RECEIVE NEW FINISHES AS SPECIFIED.

Interior Improvements to
DC Superior Courts
Building 'B'

409 E Street, NW
Washington, DC 20001

U.S. General Services Administration
301 7th Street, SW, Room 2021
Washington, DC 20407

LEO A DALY
PLANNING ARCHITECTURE ENGINEERING INTERIORS
EST. 1915
1201 Connecticut Ave, NW
Washington DC 20036 USA
Tel 202-861-4600 Fax 202-872-8530

Dalco
10005 Old Columbia Road Suite L261
Columbia, MD 21046
Tel: 410-290-8827
Fax: 410-290-8812

Contractor
Address

KEY PLAN

ISSUES / REVISIONS

NO.	DESCRIPTION	DATE

FILE LOG

ACTIVITY	REFERENCE	BY
Manager		
Design		
Draw		
Draw		
Draw		
Check		

REGISTRATION

JOB No 52010300

CONSTRUCTION PACKAGE

ISSUED FOR CONSTRUCTION
(FINAL) APRIL 8, 2003

CONSTRUCTION NOTES

G0.04

© Leo A Daly Company 2003

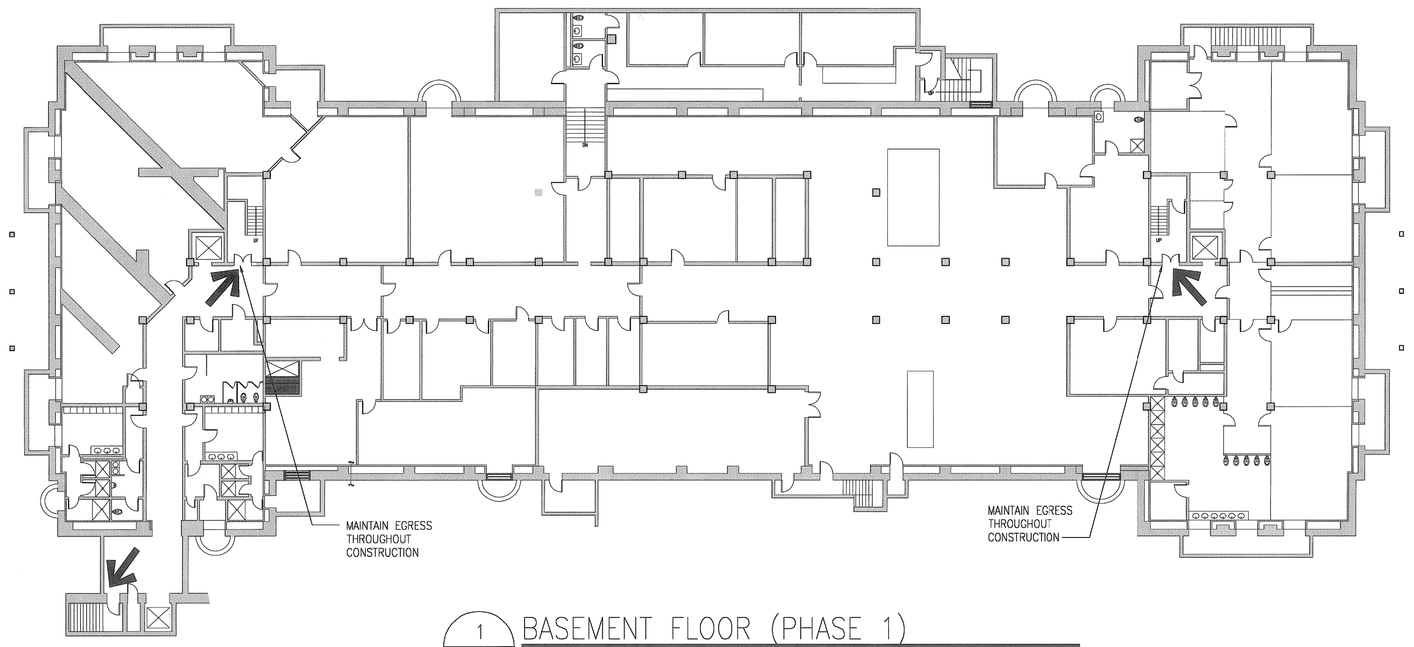

1 / AG0.05 BASEMENT FLOOR (PHASE 1)
SCALE: 1" = 20'-0"

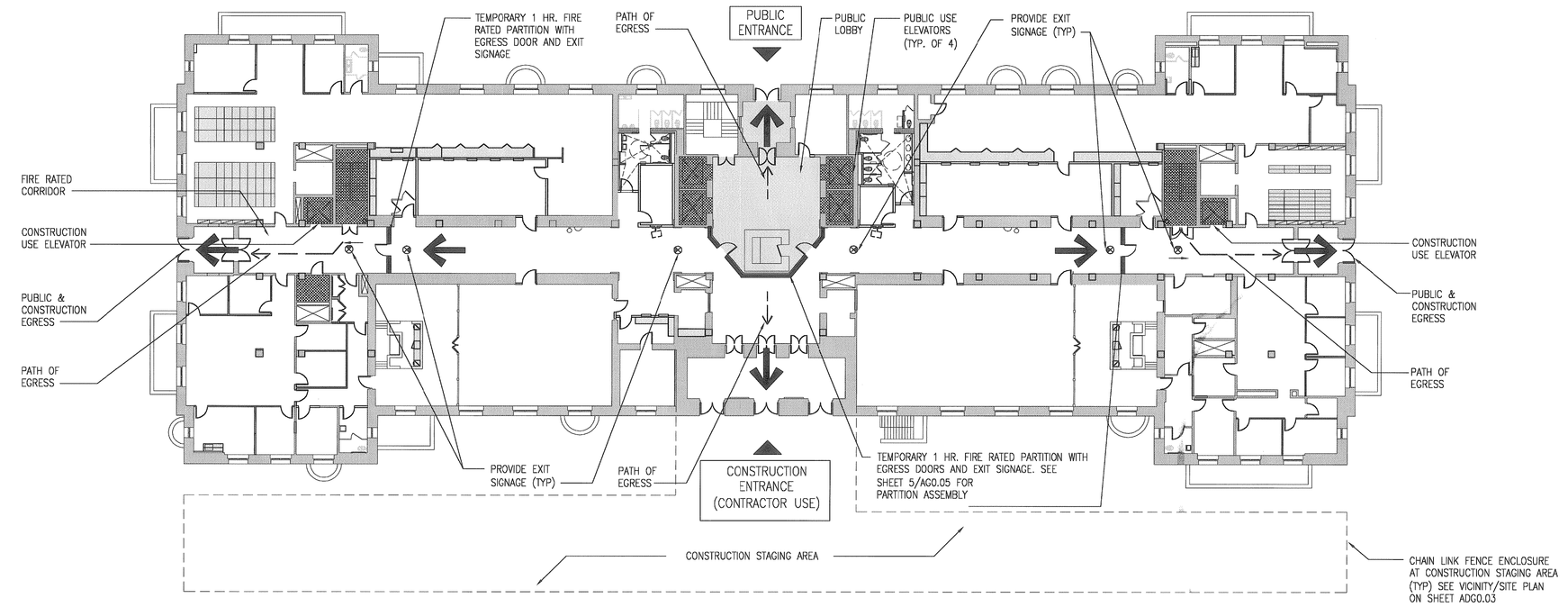

2 / G0.05 FIRST FLOOR (PHASE 1)
SCALE: 1" = 20'-0"

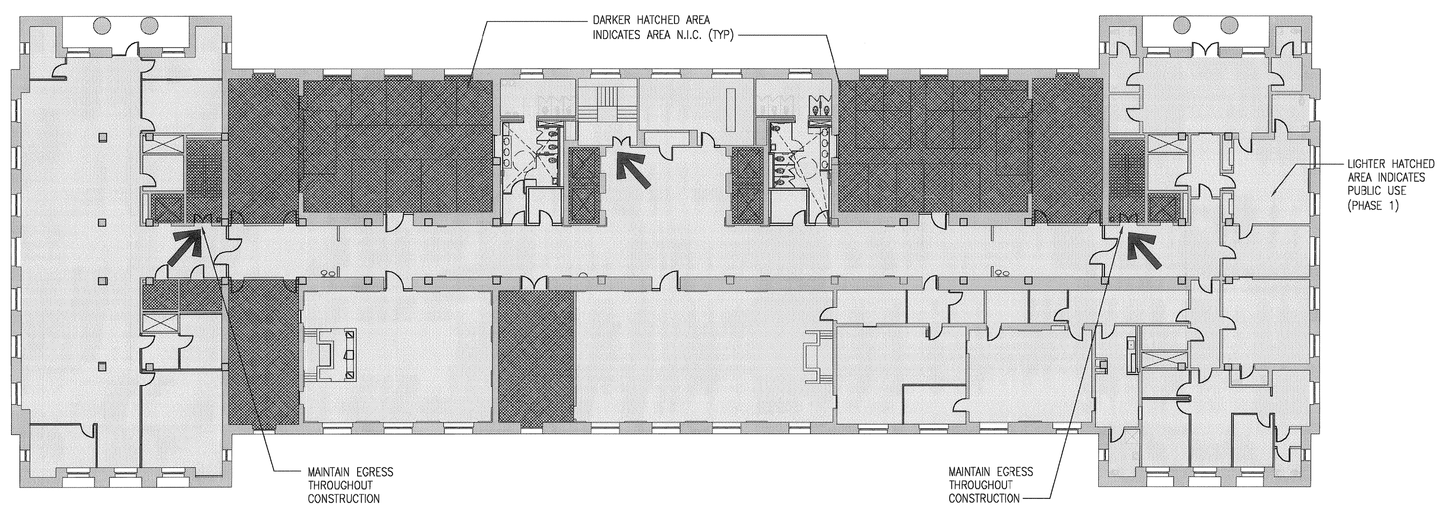

3 / G0.05 SECOND FLOOR (PHASE 2)
SCALE: 1" = 20'-0"

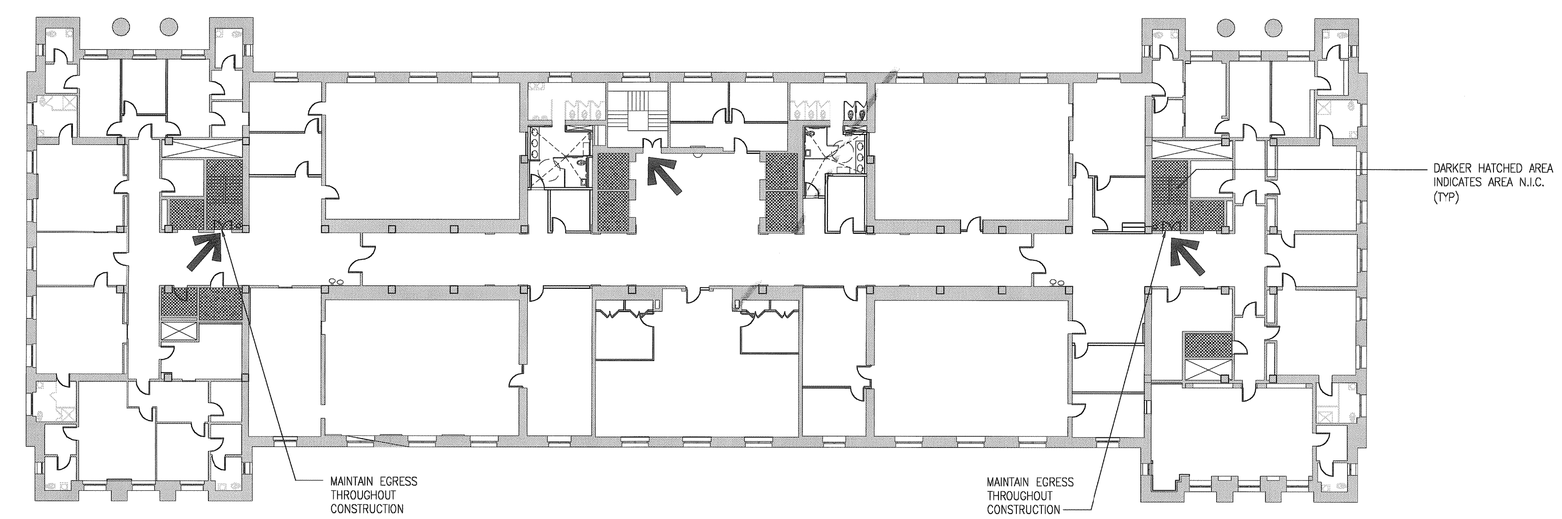

4 / G0.05 THIRD FLOOR (PHASE 1)
SCALE: 1" = 20'-0"

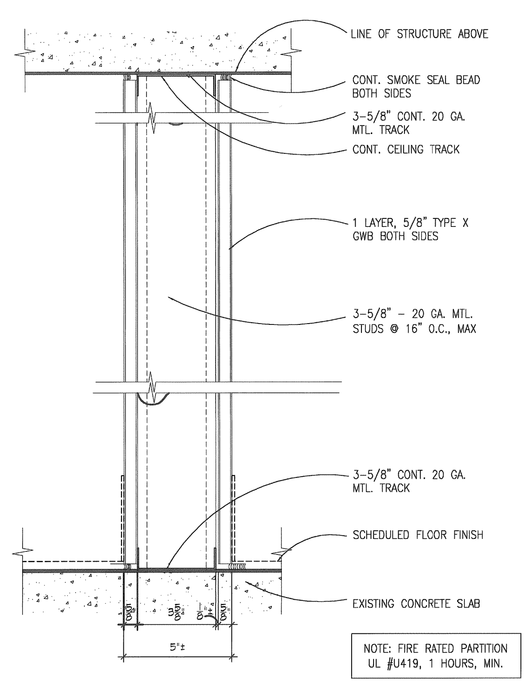

NOTE: FIRE RATED PARTITION UL #U419, 1 HOURS, MIN.

5 / G0.05 1 HR. FIRE RATED PARTITION (UL #U419)
SCALE: 3" = 1'-0"

PROJECT PHASING SEQUENCE

SEE PHASING AND TEMPORARY EGRESS PLANS THIS SHEET. THE BUILDING WILL BE PARTIALLY OCCUPIED DURING COMPLETION OF PHASE I AND PHASE II WORK. DURING PHASE I, THE SECOND FLOOR WILL BE OCCUPIED AND ALL REQUIRED EGRESS AND LIFE SAFETY PROVISIONS WILL BE INTACT AND OPERATIONAL. UPON COMPLETION OF PHASE I, THE TENANT ON THE SECOND FLOOR WILL RELOCATE TO A LOCATION DESIGNATED BY THE OWNER (DC SUPERIOR COURT) AND PHASE II WORK WILL COMMENCE ON THE SECOND FLOOR. THE BASEMENT, FIRST AND THIRD FLOORS WILL BE OCCUPIED DURING PHASE II WORK AND ALL REQUIRED EGRESS AND LIFE SAFETY PROVISIONS WILL BE INTACT AND OPERATIONAL. THERE WILL BE NO CHANGE IN USE, EGRESS, OR OCCUPANCY.

N

LEGEND

- AREA USED BY PUBLIC IN PHASE 1
- NOT IN CONTRACT (NO DEMOLITION WORK)
- REQUIRED EXIT SIGNAGE
- TEMPORARY 2 HR FIRE RATED PARTITIONS W/1.5 HOUR 3'-0" X 7'-0" SELF CLOSING FIREPROOF DOORS AS SHOWN

Interior Improvements to DC Superior Courts Building 'B'

409 E Street, NW
Washington, DC 20001

U.S. General Services Administration
301 7th Street, SW, Room 2021
Washington, DC 20407

LEO A DALY
PLANNING ARCHITECTURE ENGINEERING INTERIORS
EST. 1915
1201 Connecticut Ave, NW
Washington DC 20036 USA
Tel 202-861-4600 Fax 202-872-8530

Dalco
10005 Old Columbia Road Suite L261
Columbia, MD 21046
Tel: 410-290-8827
Fax: 410-290-8612

Contractor
Address

KEY PLAN

ISSUES / REVISIONS

NO.	DESCRIPTION	DATE

FILE LOG

ACTIVITY	REFERENCE	BY
Manager		
Design		
Draw		
Draw		
Draw		
Check		

REGISTRATION

JOB No 52010300

CONSTRUCTION PACKAGE

ISSUED FOR CONSTRUCTION (FINAL) APRIL 8, 2003

TEMPORARY EGRESS AND PHASING PLANS

G0.05

© Leo A Daly Company 2003

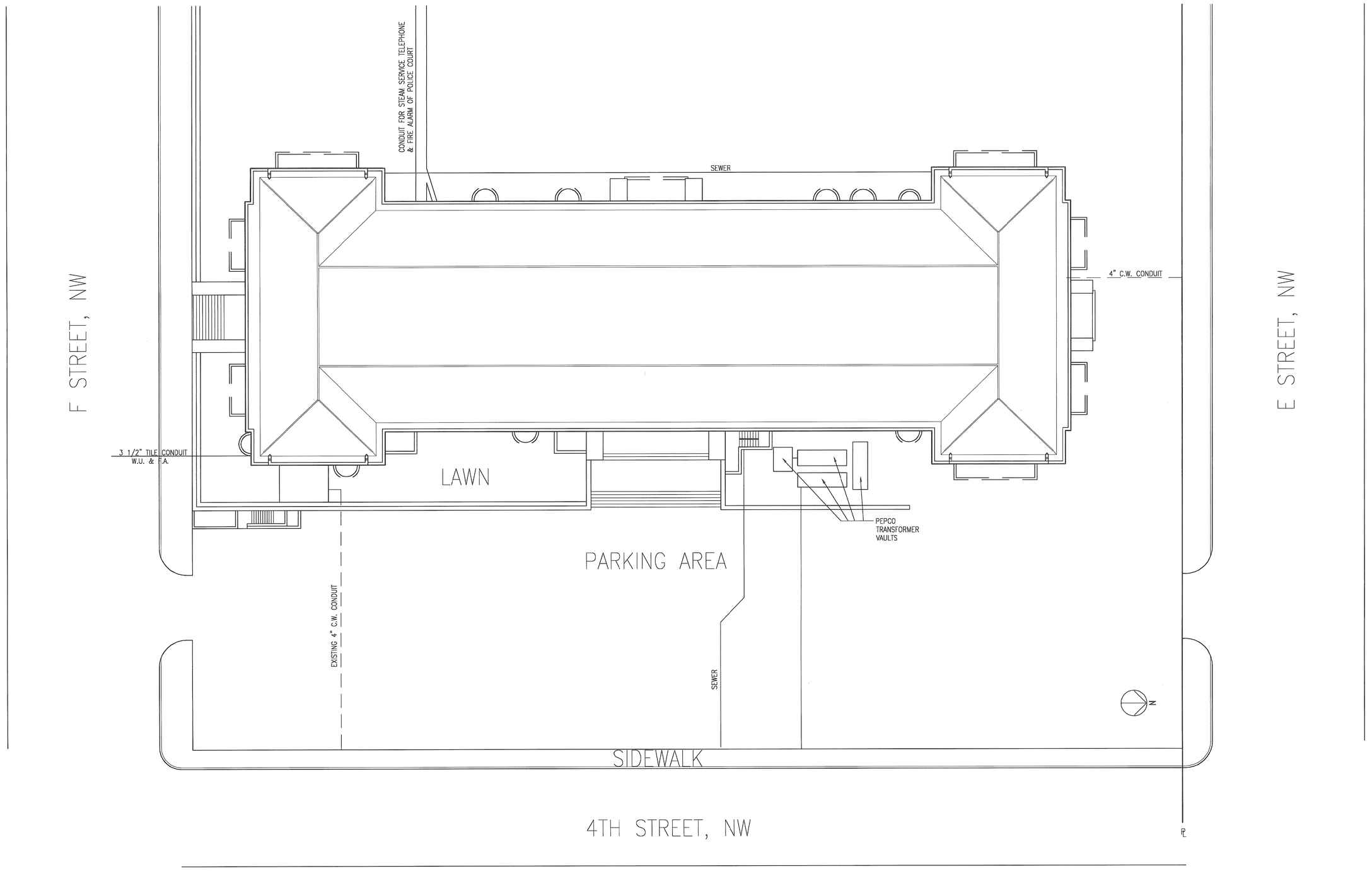

1 / C1.01 EXISTING CONDITIONS PLAN
SCALE: 1" = 20'

LOCATION MAP

NORTHWEST WASHINGTON, DC

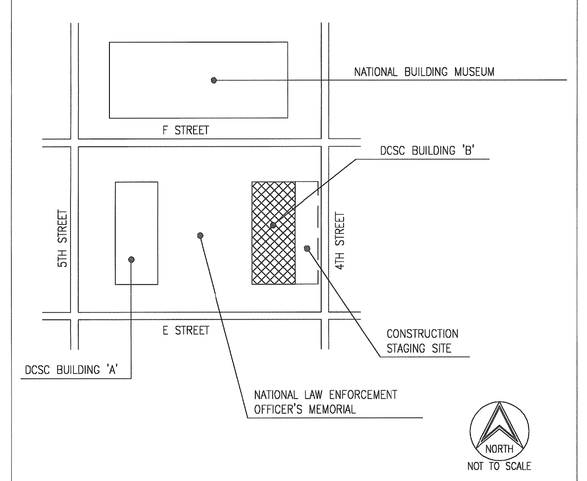

LOT 800 - SQUARE 0488E

Interior Improvements to DC Superior Courts Building 'B'

409 E Street, NW
Washington, DC 20001

U.S. General Services Administration
301 7th Street, SW, Room 2021
Washington, DC 20407

LEO A DALY
PLANNING ARCHITECTURE ENGINEERING INTERIORS
EST. 1915
1201 Connecticut Ave, NW
Washington DC 20036 USA
Tel 202-861-4600 Fax 202-872-8530

Dalco
10005 Old Columbia Road Suite L261
Columbia, MD 21046
Tel: 410-290-8827
Fax: 410-290-8812

Contractor
Address

KEY PLAN

ISSUES / REVISIONS

NO.	DESCRIPTION	DATE

FILE LOG

ACTIVITY	REFERENCE	BY
Manager		
Design		
Draw		
Draw		
Draw		
Check		

REGISTRATION

JOB No 52010300

CONSTRUCTION PACKAGE

ISSUED FOR CONSTRUCTION (FINAL) APRIL 8, 2003

EXISTING CONDITIONS PLAN

C1.01

© Leo A Daly Company 2003

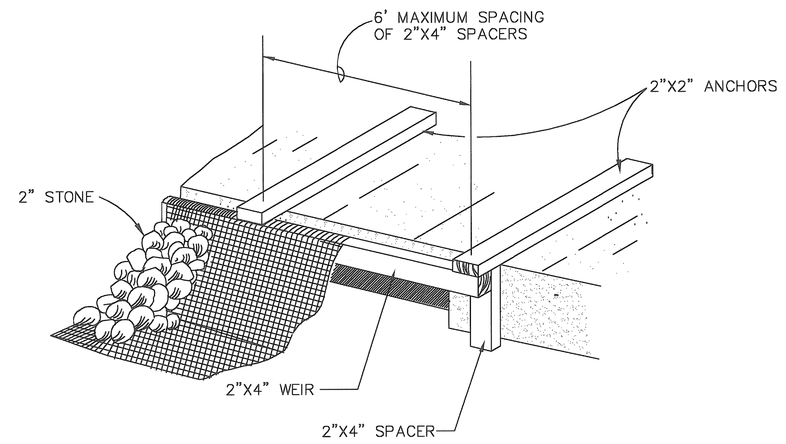

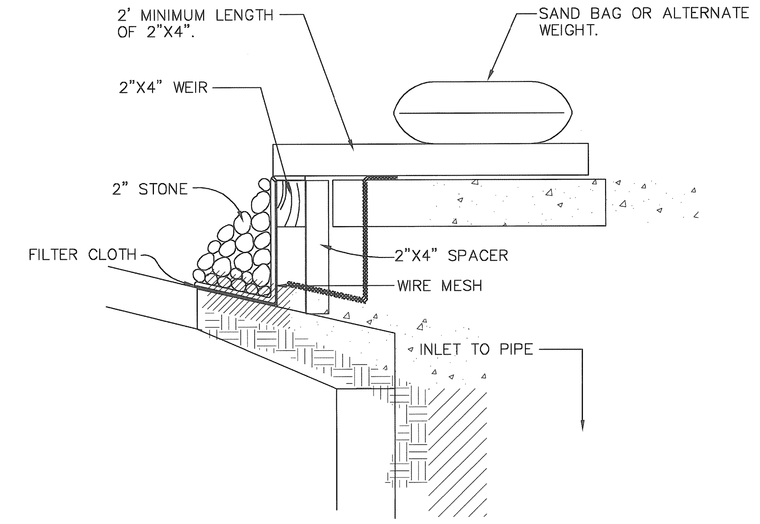

1. ATTACH A CONTINUOUS PIECE OF WIRE MESH (30" MIN. WIDTH BY THROAT LENGTH PLUS 4') TO 2"X 4" WEIR (MEASURING THROAT LENGTH PLUS 2') AS SHOWN ON THE STANDARD DRAWING.
2. PLACE A PIECE OF APPROVED FILTER CLOTH (40-85 SIEVE) OF THE SAME DIMENSIONS AS THE WIRE MESH OVER THE WIRE MESH AND SECURELY ATTACH TO THE 2"X 4" WEIR.
3. SECURELY NAIL THE 2"X 4" WEIR TO 9" LONG VERTICAL SPACER TO BE LOCATED BETWEEN THE WEIR AND INLET FACE (MAX. 6' APART).
4. PLACE THE ASSEMBLY AGAINST THE INLET THROAT AND NAIL (MINIMUM 2' LENGTHS OF 2"X 4" TO THE TOP OF THE WEIR AT SPACER LOCATIONS. THESE 2"X 4" ANCHORS SHALL EXTEND ACROSS THE INLET TOP AND BE HELD IN PLACE BY SANDBAGS OR ALTERNATE WEIGHT.
5. THE ASSEMBLY SHALL BE PLACED SO THAT THE END SPACERS ARE A MINIMUM 1' BEYOND BOTH END OF THE THROAT OPENING..
6. FORM THE WIRE MESH AND FILTER CLOTH TO THE CONCRETE GUTTER AND AGAINST THE FACE OF CURB ON BOTH SIDES OF THE INLET. PLACE CLEAN 2" STONE OVER THE WIRE MESH AND FILTER FABRIC IN SUSCH A MANNER AS TO PREVENT WATER FROM ENTERING THE INLET UNDER OR AROUND THE FILTER CLOTH.
7. THIS TYPE OF PROTECTION MUST BE INSPECTED FREQUENTLY AND THE FILTER CLOTH AND STONE REPLACED WHEN CLOGGED WITH SEDIMENT.
8. ASSURE THAT STORM FLOW DOES NOT BYPASS INLET BY INSTALLING TEMPORARY EARTH OR ASPHALT DIKES DIRECTING FLOW INTO INLET.

CURB INLET SEDIMENT FILTER

PROJECT DESCRIPTION

THE PROJECT ENTAILS THE INTERIOR RENOVATION OF DC SUPERIOR COURT BUILDING B,, LOCATED AT 409 E STREET, NW, WASHINGTON, DC. EXTERIOR WORK ENTAILS THE INSTALLATION OF A NEW 6" WATER LINE (FIRE SUPRESSION WATER SERVICE PIPE) BETWEEN STREET MAIN ON 4TH STREET, AND THE BASEMENT LEVEL ON THE EAST SIDE OF THE BUILDING. EXISTING WALKS, PAVING AND PARKING WILL BE RESTORED TO MATCH ORIGINAL, AND COMPLY WITH DISTRICT OF COLUMBIA DEPT. OF HIGHWAYS SIDEWALK STANDARD.

EXISTING SITE CONDITIONS

THE SITE COMPRISES THE DC SUPERIOR COURT BUILDING B, PAVED PARKING ON THE EAST SIDE OF THE BUILDING, AND MISCELLANEOUS PLANTED AREAS ON THE NORTH, SOUTH, EAST AND WEST SIDES OF THE BUILDING.

ADJACENT AREAS

LOCATED AT 409 E STREET, NW, WASHINGTON, DC, THE SITE IS BOUNDED BY A PAVED PARKING AREA ON THE EAST SIDE; JUDICIARY SQUARE COURT ON THE WEST SIDE, E STREET ON THE SOUTH SIDE, AND F STREET ON THE NORTH SIDE.

CRITICAL AREAS

NONE EXIST ON THIS SITE

SEDIMENT CONTROL MEASURES

1. ALL EROSION AND SEDIMENT CONTROL MEASURES SHALL BE INSTALLED BEFORE THE START OF EXCAVATION AND/OR CONSTRUCTION AS PER THE "STANDARDS AND SPECIFICATIONS FOR SOIL EROSION AND SEDIMENT CONTROL" FOR THE DISTRICT OF COLUMBIA. IF AN ON-SITE INSPECTION REVEALS FURTHER EROSION CONTROL MEASURES ARE NECESSARY THE SAME SHALL BE PROVIDED.
2. ALL DEBRIS SHALL BE REMOVED FROM THE SITE.
3. STREETS SHALL BE SWEPT CLEAN AT ALL TIMES DURING EXCAVATION AND CONSTRUCTION.
4. ALL DRAINS AND INLETS SHALL BE PROTECTED DURING EXCAVATION AND CONSTRUCTION.
5. IF DRAINS OR STORM SEWERS BECOME CLOGGED AS A RESULT OF EXCAVATION OR CONSTRUCTION, THE CONTRACTOR SHALL BE RESPONSIBLE FOR ITS CLEANING.
6. ESTABLISH TEMPORARY VEGETATIVE COVER ON DENUDED AREAS OR SOIL STOCKPILES THAT ARE NOT TO BE FINE-GRADED FOR PERIODS LONGER THAN 20 DAYS.
7. ANY TEMPORARY STOCKPILES ARE TO BE LOCATED WITHIN AREAS PROTECTED BY SEDIMENT CONTROL MEASURES, AND ARE TO BE TEMPORARILY STABILIZED.

CONSTRUCTION NARRATIVE

1. INSTALL INLET PROTECTION AS SHOWN ON THE PLANS.
2. TEMPORARY SOIL EROSION AND SEDIMENT CONTROL MEASURES ARE TO BE PROVIDED AS PER THE APPROVED PLAN PRIOR TO GRADING OPERATIONS. LOCATION AJUSTMENTS ARE TO BE MADE IN THE FIELD AS NECESSARY. THE MINIMUM AREA PRACTICAL SHALL BE DISTURBED FOR THE MINIMUM POSSIBLE TIME.
3. DEMOLITION PAVEMENT: IF INSTALLATION OF NEW PAVEMENT DOES NOT IMMEDIATELY FOLLOW PAVEMENT DEMOLITION, STABILIZE DENUDED AREA WITH TEMPORARY STABILIZED CONSTRUCTION.
4. EXCAVATE TRENCH FOR UTILITIES. INSTALL LINES AND BACKFILL IMMEDIATELY AFTER LINES ARE TESTED.
5. COMPLETE CONSTRUCTION AND AND ALL SITE APPURTENANCES.
6. PERMANENTLY STABILIZE THE AREAS DISTURBED BY CONTRACTOR'S OPERATIONS.
7. THROUGHOUT CONSTRUCTION REMOVE ALL DEBRIS AND DESPOSE OF LEGALLY. KEEP PUBLIC SPACE AREAS CLEAN AT ALL TIMES. ANY PAVEMENT SURFACES SOILED OR STAINED DURING CONSTRUCTION SHALL BE CLEANED IMMEDIATELY.
8. SEDIMENT CONTROL MEASURES ARE NOT TO BE REMOVED UNTIL THE AREAS SERVED HAVE STABILIZED COVER, AND WITH THE PERMISSION OF THE DISTRICT OF COLUMBIA.
9. THROUGHOUT CONSTRUCTION THE CONTRACTOR SHALL INSPECT THE EROSION AND SEDIMENT CONTROLS DAILY. ANY CONTROLS THAT ARE FILLED WITH SILT, NOT FUNCTIONING PROPERLY, OR IN DISREPAIR SHALL BE FIXED BY THE END OF THE DAY.

STORMWATER MANAGEMENT

1. QUANTITY CONTROL: NO QUANTITY CONTROL ARE NOT REQUIRED FOR THIS SITE.

STANDARD AND SPECIFICATION FOR DUST CONTROL

1. THE CONTRACTOR SHALL CONDUCT OPERATIONS AND MAINTAIN THE PROJECT SITE SO AS TO MINIMIZE THE CREATION AND DISPERSION OF DUST. DUST CONTROL SHALL BE USED THROUGHOUT THE WORK AT THE SITE.
2. THE CONTRACTOR MUST PROVIDE CLEAN WATER, FREE FROM SALT, OIL AND OTHER DELETERIOUS MATERIAL TO BE USED FOR ON-SITE DUST CONTROL.
3. THE CONTRACTOR SHALL SUPPLY WATER SPRAYING EQUIPMENT CAPABLE OF ACCESSING ALL WORK AREAS.
4. THE CONTRACTOR SHALL IMPLEMENT STRICT DUST CONTROL MEASURES DURING ACTIVE CONSTRUCTION PERIODS ON-SITE. THESE CONTROL MEASURES WILL GENERALLY CONSIST OF WATER APPLICATIONS THAT SHALL BE APPLIED A MINIMUM OF ONCE PER DAY DURING DRY WEATHER OR MORE OFTEN AS REQUIRED TO PREVENT DUST EMISSIONS.
5. FOR WATER APPLICATION TO UNDISTURBED SOIL SURFACES, THE CONTRACTOR SHALL:
   - A. APPLY WATER WITH EQUIPMENT CONSISTING OF TANK, SPRAY BAR, PUMP WITH DISCHARGE PRESSURE GAUGE.
   - B. ARRANGE SPRAY BAR HEIGHT, NOZZLE SPACING AND SPRAY PATTERN TO PROVIDE COMPLETE COVERAGE OF GROUND WITH WATER.
   - C. DISPERSE WATER THROUGH NOZZLES ON SPRAY BAR AT 20 PSI (137.8 KPa), MINIMUM. KEEP AREAS DAMP WITHOUT CREATING NUISANCE CONDITIONS SUCH AS PONDING.
6. FOR WATER APPLICATION TO SOIL SURFACES DURING DEMOLITION AND/ OR EXCAVATION, THE CONTRACTOR SHALL:
   - A. APPLY WATER WITH EQUIPMENT CONSISTING OF A TANK, PUMP WITH DISCHARGE GAUGE, HOSES AND MIST NOZZLES.
   - B. LOCATE TANK AND SPRAYING EQUIPMENT SO THAT THE ENTIRE EXCAVATED AREA CAN BE MISTED WITHOUT INTERFERING WITH DEMOLITION AND /OR EXCAVATION EQUIPMENT OR OPERATIONS. KEEP AREAS DAMP WITHOUT CREATING NUISANCE CONDITIONS SUCH AS PONDING.
   - C. APPLY WATER SPRAY IN A MANNER TO PREVENT MOVEMENT OF SPRAY BEYOND THE SITE BOUNDARIES

SEQUENCE OF LAND DISTURBING ACTIVITIES

ALL MECHANICAL CONTROLS SHALL BE CONSTRUCTED PRIOR TO STARTING EXCAVATION OPERATIONS. EXCAVATE FOR BUILDING CONSTRUCTION. REMOVE EXCESS MATERIAL FROM SITE. STABILIZE DENUDED AREAS. AFTER BUILDING IS COMPLETED, PREPARE SURFACES THAT ARE TO RECEIVE FILL, BACKFILL AND TOPSOIL; COMPLETE EARTHWORK AND ESTABLISH PERMANENT PLANT MATERIAL.

PLAN NUMBER _____

THIS APPROVAL IS FOR GRADING AND SEDIMENT CONTROL ONLY. PERMITTEE/CONTRACTOR IS REQUIRED TO CONSTRUCT DESIGN FEATURES SHOWN HEREON.

HE SHALL NOTIFY THIS OFFICE AT NUMBER BELOW AT LEAST 24 HRS. BEFORE START OF GRADING ACTIVITY, AND WITHIN TWO WEEKS AFTER COMPLETION OF PROJECT FOR FINAL INSPECTION.

_____ DATE

_____ FLOODING AND EROSION CONTROL SECTION (202)645-6059

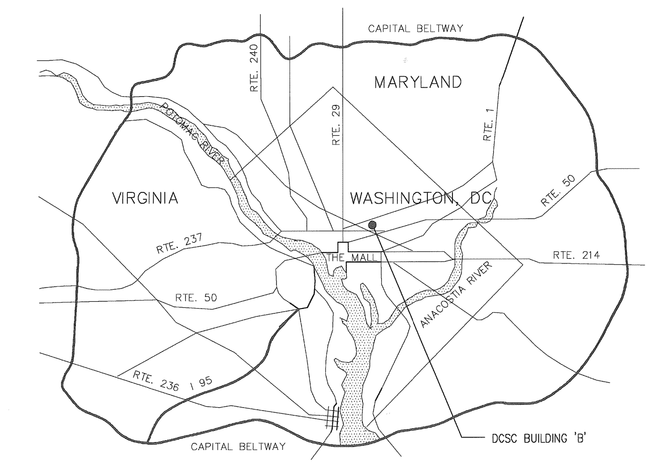

VICINITY MAP

NORTHWEST WASHINGTON, DC

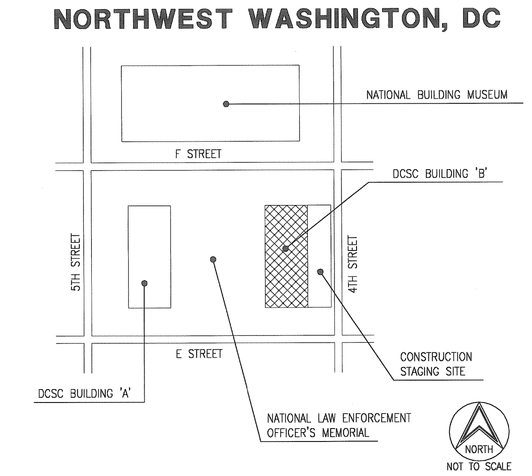

LOCATION MAP

Interior Improvements to DC Superior Courts Building 'B'

409 E Street, NW
Washington, DC 20001

U.S. General Services Administration
301 7th Street, SW, Room 2021
Washington, DC 20407

LEO A DALY
PLANNING ARCHITECTURE ENGINEERING INTERIORS
EST. 1915
1201 Connecticut Ave, NW
Washington DC 20036 USA
Tel 202-861-4600 Fax 202-872-8530

Dalco Incorporated
10005 Old Columbia Road Suite L261
Columbia, MD 21046
Tel: 410-290-8827
Fax: 410-290-8812

Contractor
Address

KEY PLAN

ISSUES / REVISIONS

NO.	DESCRIPTION	DATE

FILE LOG

ACTIVITY	REFERENCE	BY
Manager		
Design		
Draw		
Draw		
Draw		
Check		

REGISTRATION

JOB No 52010300

CONSTRUCTION PACKAGE

ISSUED FOR CONSTRUCTION (FINAL) APRIL 8, 2003

EROSION CONTROL DETAILS/ NOTES

C2.01

© Leo A Daly Company 2003

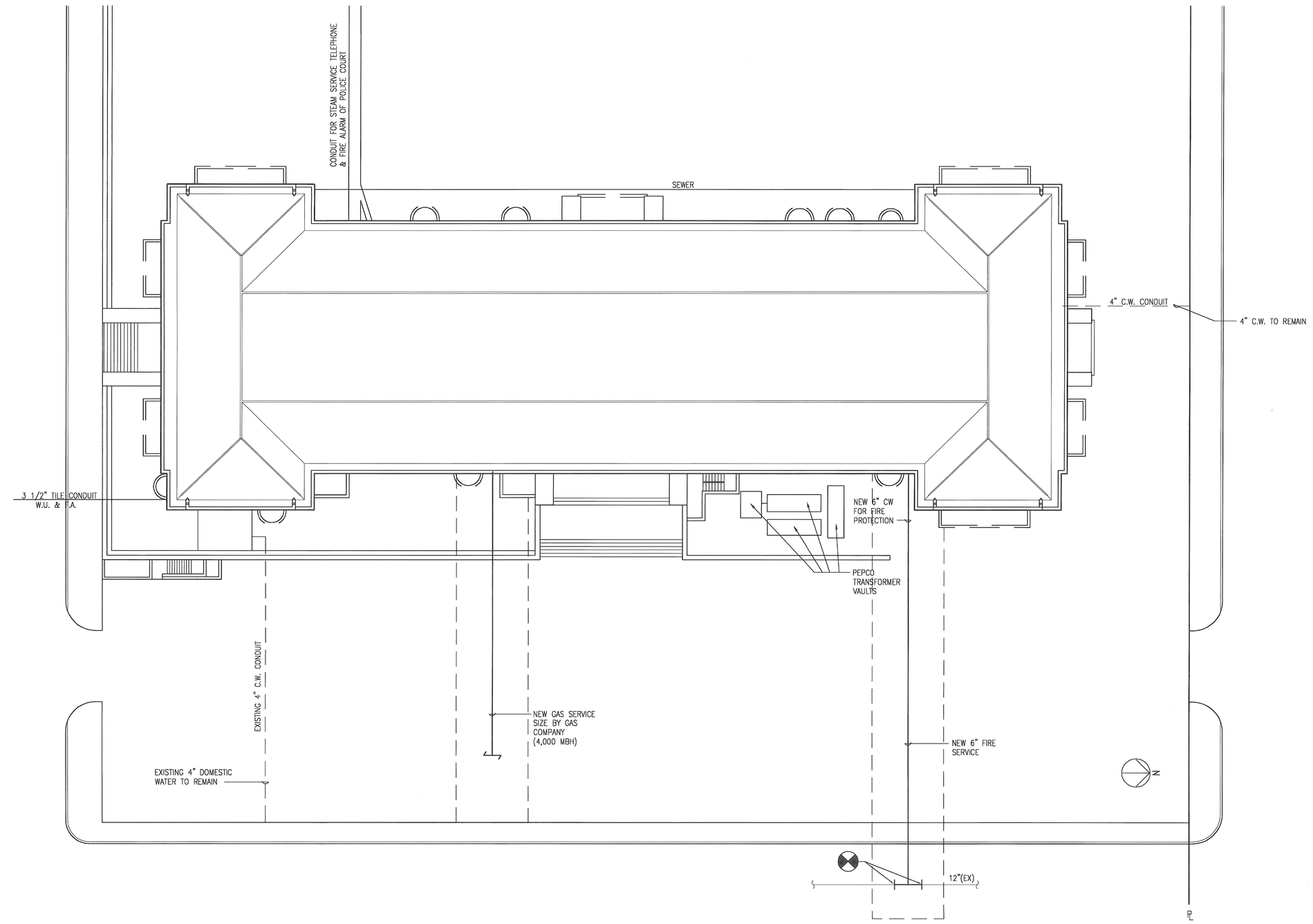

1 C3.01 SITE UTILITY PLAN

SCALE: 1" = 20'

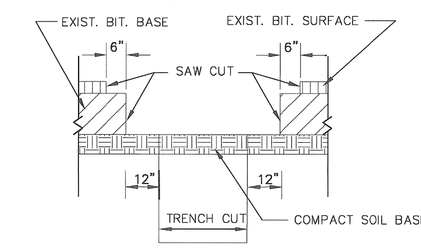

PREPARATION OF CUT FOR REPAIR

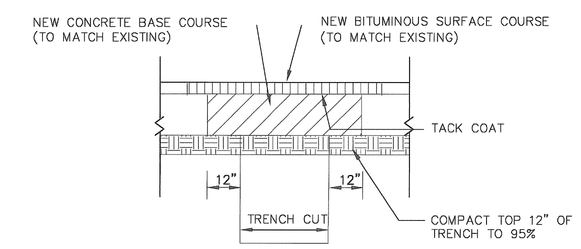

COMPLETED CUT REPAIR

2 C3.01 UTILITY TRENCH REPAIR

NOTES

1. NOTIFY DC-WASA ONE (1) WEEK PRIOR TO START OF CONSTRUCTION, UTILITY INSPECTION SECTION AT 202.787.2377, WATER SERVICES AT 202.614.3400 OR 3460 AND SEWER SERVICES AT 202.364.3824 OR 3829.
2. CONTACT MISS UTILITY 1.800.257.7777 48 HOURS PRIOR TO THE START OF CONSTRUCTION.
3. DEVELOPERS, CONTRACTORS AND PLUMBERS MUST SUBMIT FINAL CONSTRUCTION AS-BUILT INFORMATION TO THE APPROPRIATE DC-WASA INSPECTOR(S) FOR REVIEW AND APPROVAL, UPON COMPLETION OF NEW AND EXISTING UTILITIES TO BE ABANDONED IN PUBLIC SPACE. APPLICANT MUST SUBMIT THESE DRAWINGS. AS-BUILT DRAWINGS MUST SHOW DIMENSIONS, ELEVATIONS, RELOCATION OF ANY WASA UTILITIES AND PERTINENT INFORMATION.
   ONCE THE WASA INSPECTOR APPROVES THE AS-BUILT, A COPY MUST BE SUBMITTED TO THE DOCUMENTS AND PERMITS OFFICE AT ROOM 203 AND THE WATER AND SEWER DESIGN SECTION AT 5000 OVERLOOK AVENUE, SW, 5th FLOOR.
4. ALL PROPOSED UTILITY WORK SHALL BE PERFORMED UNDER THE INSPECTION OF THE DISTRICT OF COLUMBIA WATER AND SEWER AUTHORITY.
5. ALL PROPOSED UTILITY WORK SHALL BE CONSTRUCTED IN ACCORDANCE WITH THE LATEST STANDARDS AND SPECIFICATIONS OF THE DISTRICT OF COLUMBIA WATER AND SEWER AUTHORITY.
6. USE MANHOLE ENTRY SEALS WHERE REQUIRED.
7. WATER LINES SHALL HAVE A MINIMUM COVER OF 36-INCHES.
8. THE LOCATION OF EXISTING UTILITIES (ELEC., GAS, TELE, CABLE, ETC.) ARE NOT KNOWN.

Interior Improvements to DC Superior Courts Building 'B'

409 E Street, NW
Washington, DC 20001

U.S. General Services Administration
301 7th Street, SW, Room 2021
Washington, DC 20407

LEO A DALY
PLANNING ARCHITECTURE ENGINEERING INTERIORS
EST. 1915

1201 Connecticut Ave, NW
Washington DC 20036 USA
Tel 202-861-4600 Fax 202-872-8530

Dalco INCORPORATED
10005 Old Columbia Road Suite L261
Columbia, MD 21046
Tel: 410-290-8827
Fax: 410-290-8812

Contractor
Address

KEY PLAN

ISSUES / REVISIONS

NO.	DESCRIPTION	DATE

FILE LOG

ACTIVITY	REFERENCE	BY
Manager		
Design		
Draw		
Draw		
Draw		
Check		

REGISTRATION

JOB No 52010300

CONSTRUCTION PACKAGE

ISSUED FOR CONSTRUCTION (FINAL) APRIL 8, 2003

SITE UTILITY PLAN

C3.01

© Leo A Daly Company 2003

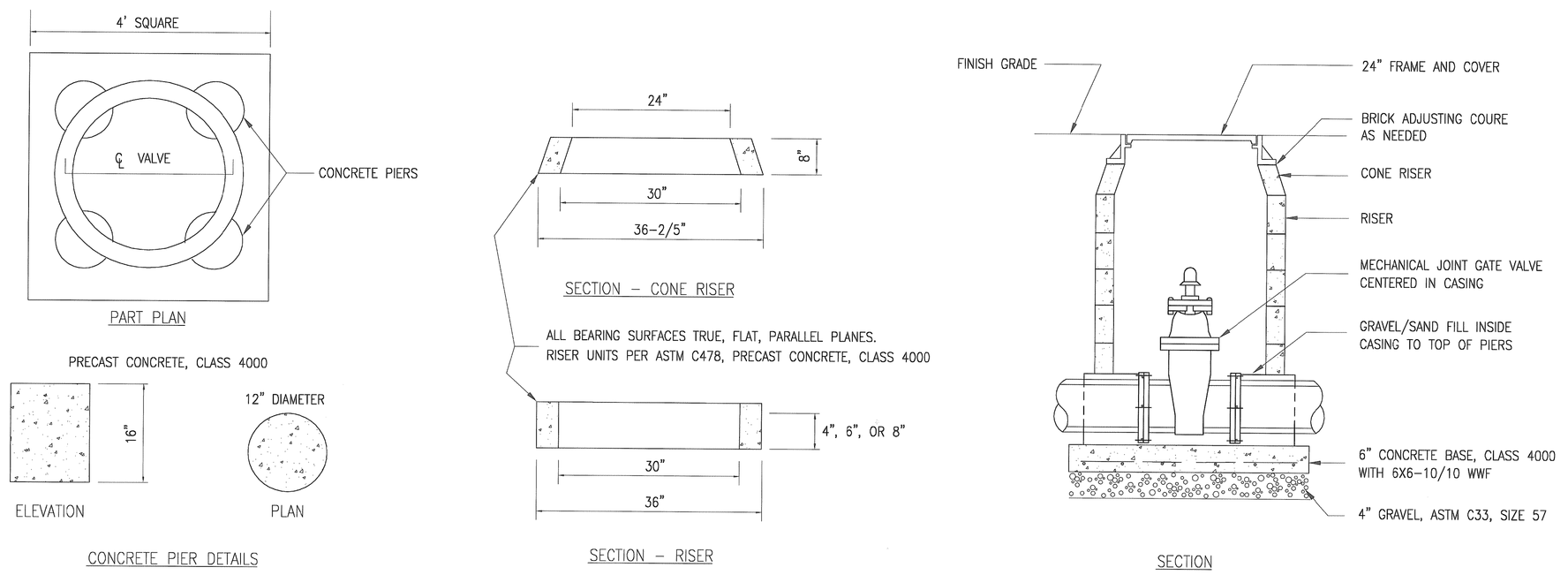

VALVE CASING

GENERAL NOTES FOR THRUST BLOCKS

1. CONCRETE STRENGTH: 3000 psi AT 28 DAYS
2. BOTTOM SURFACE AND FRONT FACE OF BLOCK (i.e.,D&E) SHALL REST AGAINST UNDISTURBED GROUND OR AGAINST A COMPACTED STRUCTURAL FILL.
3. DEPTH FROM FINISHED GRADE TO TOP OF PIPE IS 3'-0" MIN.

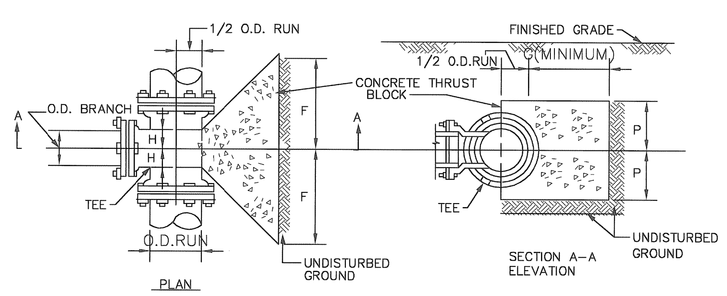

	NOMINAL DIAMETER OF BRANCH						
	3"	4"	6"	8"	10"	12"	14"
E	8"	10"	1'-6"	2'-0"	2'-9"	3'-0"	4'-3"
F	8"	10"	1'-6"	1'-9"	2'-0"	2'-6"	2'-6"
G	1"-0"	1'-0"	1'-3"	1'-9"	2'-6"	2'-9"	3'-8"
H	3"	3"	5"	5"	7"	8"	9"

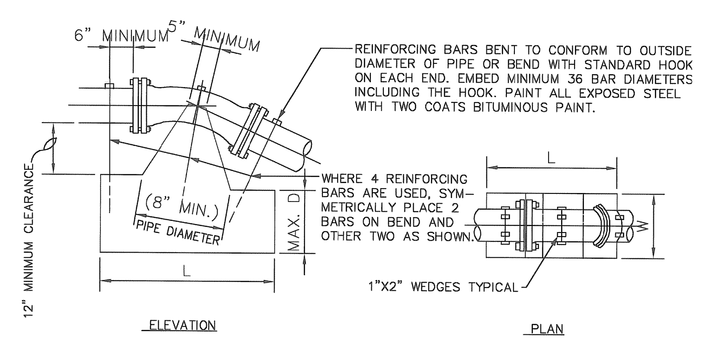

BEND		SIZE						
		3"	4"	6"	8"	10"	12"	14"
11 1/4°	L	1'-6"	1'-9"	2'-3"	2'-9"	3'-0"	3'-6"	4'-0"
	W	1'-6"	1'-9"	2'-3"	2'-9"	3'-0"	3'-6"	4'-0"
	D	1'-6"	1'-9"	2'-0"	2'-6"	3'-0"	3'-3"	3'-3"
	REINF. BARS NO. & SIZE	3#7	3#7	3#7	3#8	3#8	3#8	3#8
22 1/2°	L	1'-9"	2'-3"	2'-9"	3'-6"	3'-9"	4'-6"	5'-0"
	W	2'-0"	2'-3"	2'-9"	3'-6"	3'-9"	4'-6"	5'-0"
	D	1'-9"	2'-0"	2'-6"	3'-3"	3'-9"	4'-0"	4'-0"
	REINF. BARS NO. & SIZE	3#7	3#7	3#7	3#8	3#8	4#8	4#8
45°	L	2'-3"	2'-9"	3'-6"	4'-0"	5'-0"	6'-0"	6'-0"
	W	2'-3"	2'-9"	3'-6"	4'-0"	5'-0"	6'-0"	6'-0"
	D	2'-3"	2'-6"	3'-3"	4'-0"	4'-0"	4'-0"	5'-3"
	REINF. BARS NO. & SIZE	3#7	3#7	3#7	3#8	4#8	4#8	4#10

THRUST BLOCKS

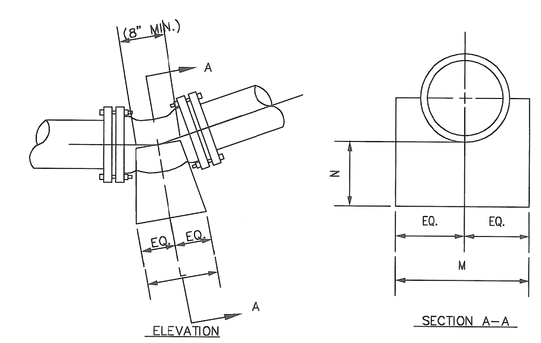

BUTTRESS FOR LOWER VERTICAL BENDS								
BEND		SIZE						
		3"	4"	6"	8"	10"	12"	14"
11 1/4°	L	6"	6"	9"	1'-3"	1'-6"	1'-6"	2'-0"
	M	1'-0"	1'-0"	1'-0"	1'-3"	1'-6"	2'-0"	2'-0"
	N	9"	9"	9"	9"	9"	9"	1'-0"
22 1/2°	L	6"	9"	1'-3"	1'-6"	2'-0"	2'-3"	2'-9"
	M	1'-0"	1'-0"	1'-3"	2'-0"	2'-0"	2'-6"	2'-9"
	N	9"	9"	9"	9"	1'-0"	1'-0"	1'-6"
45°	L	1'-0"	1'-3"	1'-9"	2'-3"	3'-6"	3'-3"	4'-0"
	M	1'-0"	1'-3"	2'-0"	2'-3"	2'-3"	3'-6"	4'-0"
	N	9"	9"	9"	1'-0"	1'-6"	1'-6"	2'-0"

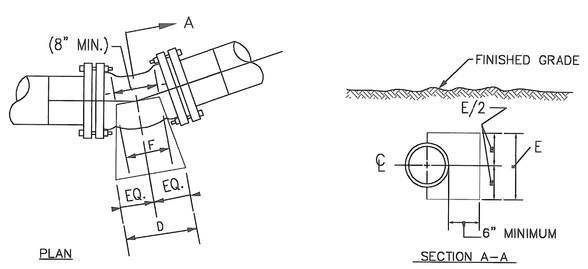

BEND TYPE	PIPE DIAMETER INCH	THRUST BLOCK DIMENSIONS			
		D	E	F	G
1/32 [11 1/4°]	4,6 AND 8	1'-6"	1'-6"	0'-8"	1'-0"
	10,12 AND 14	2'-6"	2'-6"	1'-0"	1'-0"
1/16 [22 1/2°]	4,6 AND 8	1'-9"	1'-6"	0'-8'	1'-0"
	10 AND 12	3'-6"	2'-6"	1'-0"	1'-3"
	14	5'-3"	2'-6"	1'-0"	2'-0"
1/8 [45°]	4,6 AND 8	2'-8"	2'-0"	0'-8"	1'-0"
	10	7'-0"	2'-0"	1'-0"	3'-0"
	12	7'-0"	3'-0"	1'-0"	3'-0"
	14	7'-0"	3'-6"	1'-0"	3'-0"
1/14 [90°]	4	2'-6"	1'-6"	0'-8"	1'-3"
	6	5'-0'	2'-0"	1'-0"	2'-6"
	8	6'-0"	3'-0"	1'-0"	2'-6"
	10	8'-0"	3'-0"	1'-3"	3'-6"
	12	10'-0"	3'-6"	1'-6"	4'-3"
	14	11'-0"	4'-0"	2'-0"	4'-6"

Interior Improvements to DC Superior Courts Building 'B'

409 E Street, NW
Washington, DC 20001

U.S. General Services Administration
301 7th Street, S.W. Room 2021
Washington, DC 20407

LEO A DALY
PLANNING ARCHITECTURE ENGINEERING INTERIORS
EST. 1915

1201 Connecticut Ave, NW
Washington DC 20036 USA
Tel 202-861-4600 Fax 202-872-8530

Dalco INCORPORATED
10005 Old Columbia Road Suite L261
Columbia, MD 21046
Tel: 410-290-8827
Fax: 410-290-8812

Contractor
Address

KEY PLAN

ISSUES / REVISIONS

NO.	DESCRIPTION	DATE

FILE LOG

ACTIVITY	REFERENCE	BY
Manager		
Design		
Draw		
Draw		
Draw		
Check		

REGISTRATION

JOB No 52010300

CONSTRUCTION PACKAGE

ISSUED FOR CONSTRUCTION (FINAL) APRIL 8, 2003

WATER DETAILS

C3.02

© Leo A Daly Company 2003

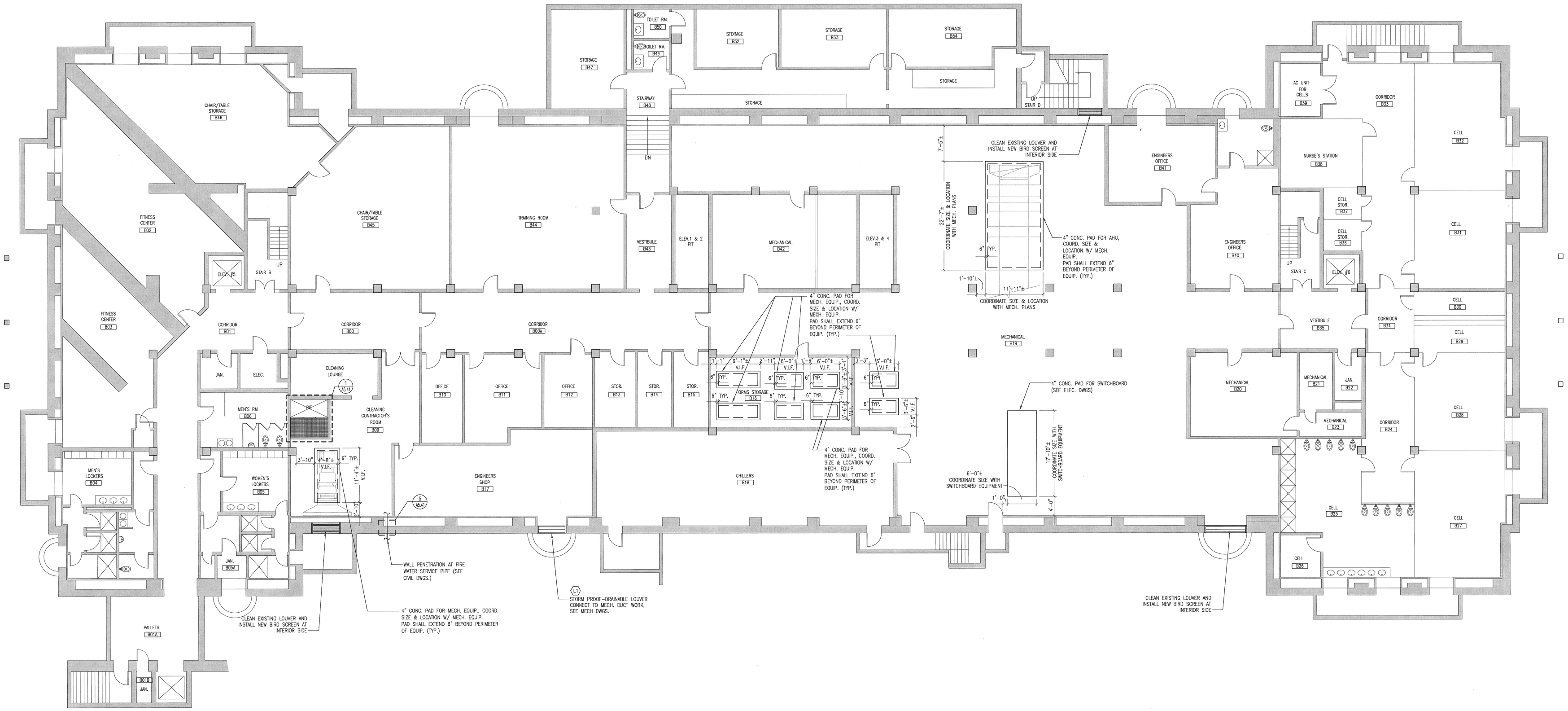

1 / A1.00 BASEMENT FLOOR PLAN
SCALE: 1/8" = 1'-0"

Interior Improvements to DC Superior Courts Building 'B'

409 E Street, NW
Washington, DC 20001

U.S. General Services Administration
301 7th Street, SW, Room 2021
Washington, DC 20407

LEO A DALY
PLANNING ARCHITECTURE ENGINEERING INTERIORS
EST. 1915
1201 Connecticut Ave, NW
Washington DC 20036 USA
Tel 202-861-4600 Fax 202-872-8530

Dalco
10005 Old Columbia Road Suite L261
Columbia, MD 21046
Tel: 410-290-8827
Fax: 410-290-8512

Contractor
Address

KEY PLAN

ISSUES / REVISIONS

NO.	DESCRIPTION	DATE

FILE LOG

ACTIVITY	REFERENCE	BY
Manager		
Design		
Draw		
Draw		
Draw		
Check		

REGISTRATION

JOB No 52010300

CONSTRUCTION PACKAGE

ISSUED FOR CONSTRUCTION (FINAL) APRIL 8, 2003

BASEMENT FLOOR PLAN

A1.00

© Leo A Daly Company 2003

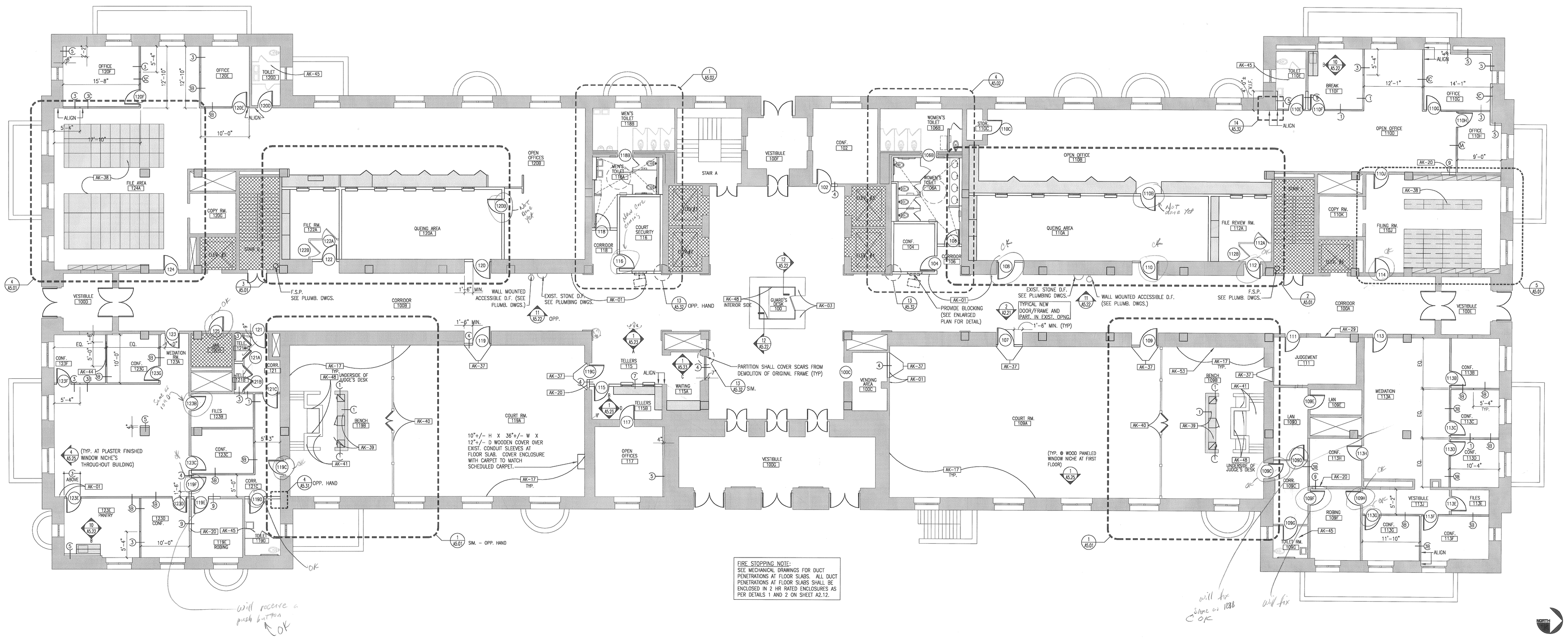

1 A1.01 FIRST FLOOR PLAN
SCALE: 1/8" = 1'-0"

FIRE STOPPING NOTE:
SEE MECHANICAL DRAWINGS FOR DUCT PENETRATIONS AT FLOOR SLABS. ALL DUCT PENETRATIONS AT FLOOR SLABS SHALL BE ENCLOSED IN 2 HR RATED ENCLOSURES AS PER DETAILS 1 AND 2 ON SHEET A2.12.

Interior Improvements to DC Superior Courts Building 'B'

409 E Street, NW
Washington, DC 20001

U.S. General Services Administration
301 7th Street, SW, Room 2021
Washington, DC 20407

LEO A DALY
PLANNING ARCHITECTURE ENGINEERING INTERIORS
EST. 1915
1201 Connecticut Ave, NW
Washington DC 20036 USA
Tel 202-861-4600 Fax 202-872-8530

Dalco
10005 Old Columbia Road Suite L261
Columbia, MD 21046
Tel: 410-290-8827
Fax: 410-290-8812

Contractor
Address

KEY PLAN

ISSUES / REVISIONS

NO.	DESCRIPTION	DATE

FILE LOG

ACTIVITY	REFERENCE	BY
Manager		
Design		
Draw		
Draw		
Draw		
Check		

REGISTRATION

JOB No 52010300

CONSTRUCTION PACKAGE

ISSUED FOR CONSTRUCTION (FINAL) APRIL 8, 2003

FIRST FLOOR PLAN

A1.01

© Leo A Daly Company 2003

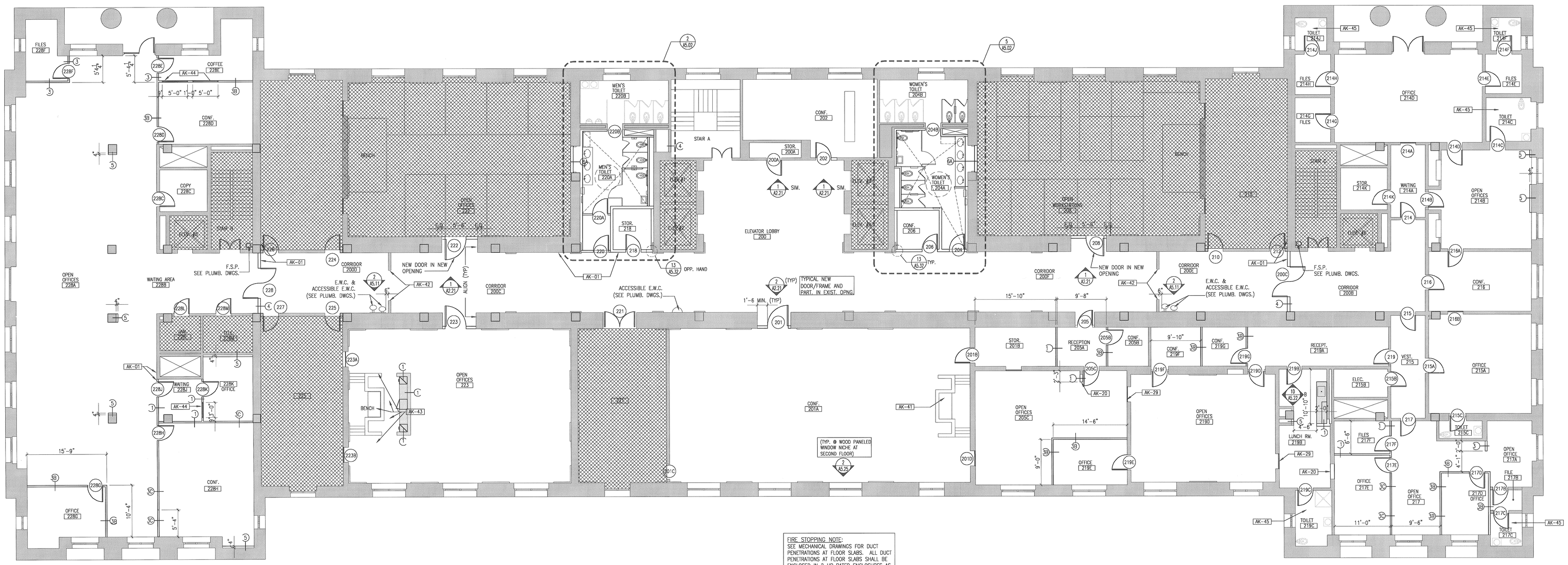

FIRE STOPPING NOTE:
SEE MECHANICAL DRAWINGS FOR DUCT PENETRATIONS AT FLOOR SLABS. ALL DUCT PENETRATIONS AT FLOOR SLABS SHALL BE ENCLOSED IN 2 HR RATED ENCLOSURES AS PER DETAILS 1 AND 2 ON SHEET A2.12.

1 / A1.02 SECOND FLOOR PLAN
SCALE: 1/8" = 1'-0"

Interior Improvements to DC Superior Courts Building 'B'

409 E Street, NW
Washington, DC 20001

U.S. General Services Administration
301 7th Street, SW, Room 2021
Washington, DC 20407

LEO A DALY
PLANNING ARCHITECTURE ENGINEERING INTERIORS
LEF 1915

1201 Connecticut Ave, NW
Washington DC 20036 USA
Tel 202-861-4600 Fax 202-872-8530

Dalco
10005 Old Columbia Road Suite L261
Columbia, MD 21046
Tel: 410-290-8827
Fax: 410-290-8812

Contractor
Address

KEY PLAN

ISSUES / REVISIONS

NO.	DESCRIPTION	DATE

FILE LOG

ACTIVITY	REFERENCE	BY
Manager		
Design		
Draw		
Draw		
Draw		
Check		

REGISTRATION

JOB No 52010300

CONSTRUCTION PACKAGE

ISSUED FOR CONSTRUCTION (FINAL) APRIL 8, 2003

SECOND FLOOR PLAN

A1.02

© Leo A Daly Company 2003

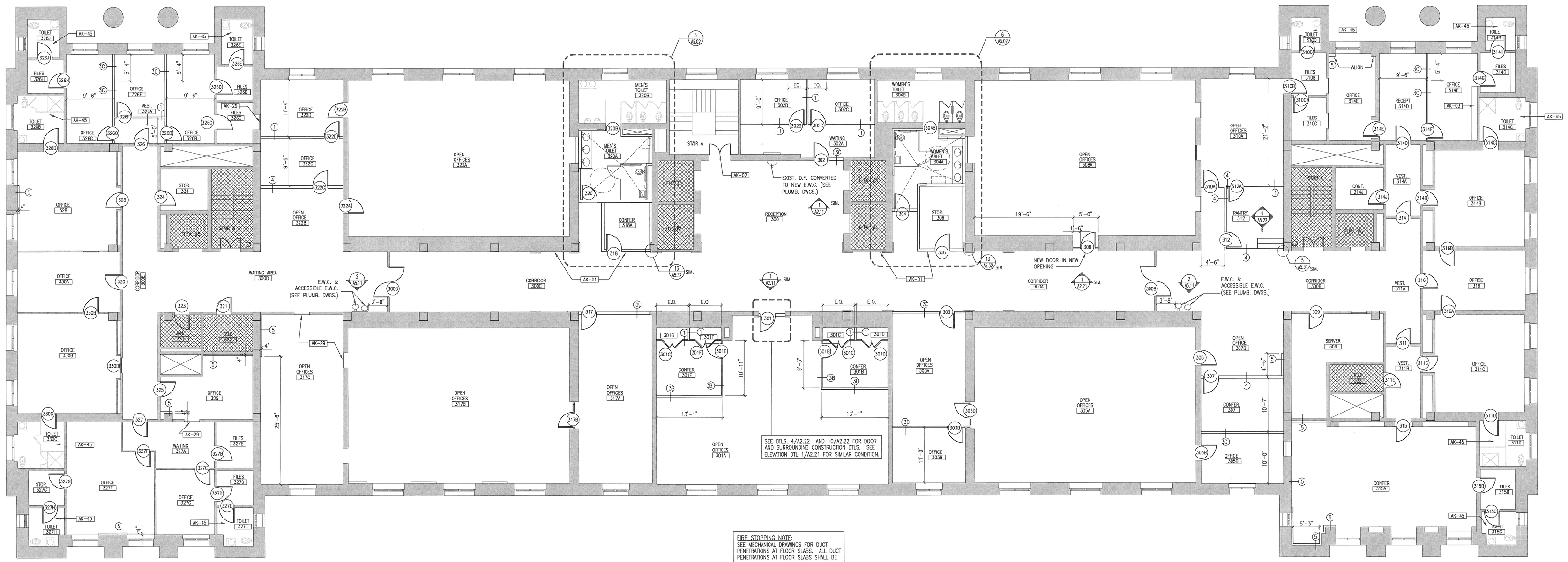

1 A1.03 THIRD FLOOR PLAN
SCALE: 1/8" = 1'-0"

Interior Improvements to DC Superior Courts Building 'B'

409 E Street, NW
Washington, DC 20001

GSA U.S. General Services Administration
301 7th Street, SW, Room 2021
Washington, DC 20407

LEO A DALY PLANNING ARCHITECTURE ENGINEERING INTERIORS
EST. 1915

1201 Connecticut Ave, NW
Washington DC 20036 USA
Tel 202-861-4600 Fax 202-872-8530

Dalco INCORPORATED
10005 Old Columbia Road Suite L261
Columbia, MD 21046
Tel: 410-290-8827
Fax: 410-290-8812

Contractor
Address

KEY PLAN

ISSUES / REVISIONS

NO.	DESCRIPTION	DATE

FILE LOG

ACTIVITY	REFERENCE	BY
Manager		
Design		
Draw		
Draw		
Draw		
Check		

REGISTRATION

JOB No 52010300

CONSTRUCTION PACKAGE

ISSUED FOR CONSTRUCTION (FINAL) APRIL 8, 2003

THIRD FLOOR PLAN

A1.03

© Leo A Daly Company 2003

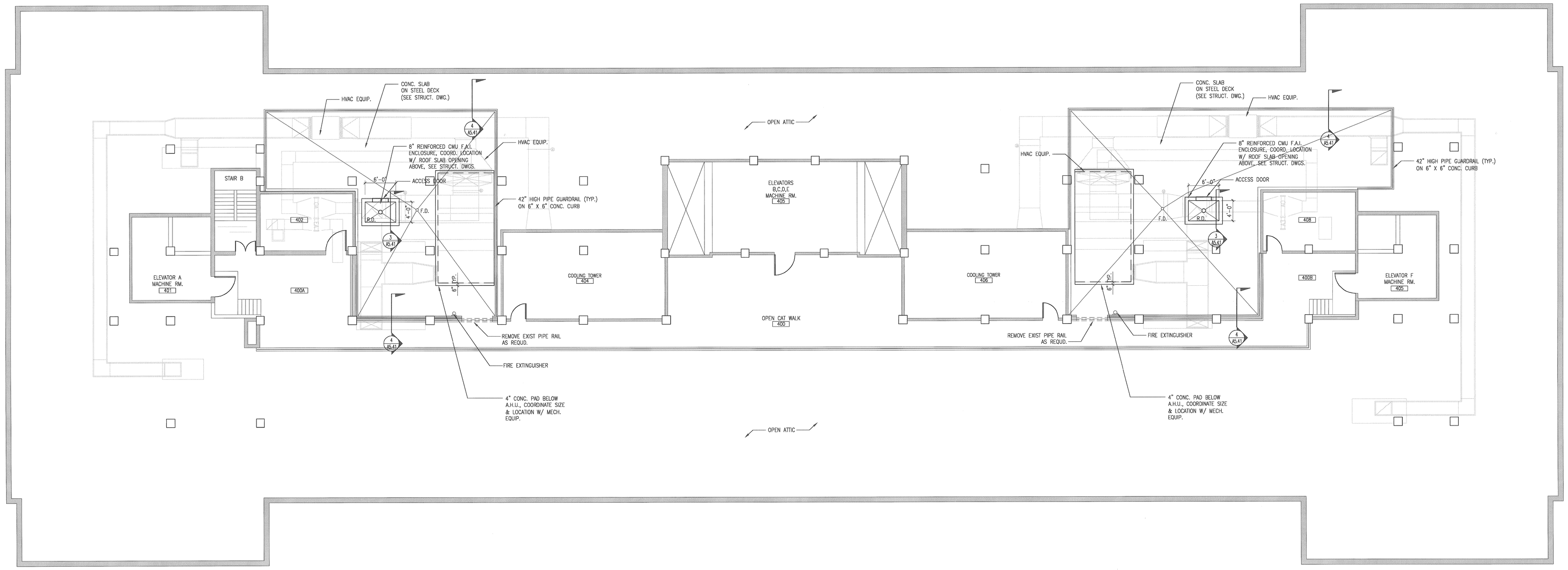

1 A1.04 ATTIC FLOOR PLAN
SCALE: 1/8" = 1'-0"

NORTH

Interior Improvements to DC Superior Courts Building 'B'

409 E Street, NW
Washington, DC 20001

U.S. General Services Administration
301 7th Street, SW, Room 2021
Washington, DC 20407

LEO A DALY
PLANNING ARCHITECTURE ENGINEERING INTERIORS
LEF 1915
1201 Connecticut Ave, NW
Washington DC 20036 USA
Tel 202-861-4600 Fax 202-872-8530

Dalco INCORPORATED
10005 Old Columbia Road Suite L261
Columbia, MD 21046
Tel: 410-290-8827
Fax: 410-290-8812

Contractor
Address

KEY PLAN

ISSUES / REVISIONS

NO.	DESCRIPTION	DATE

FILE LOG

ACTIVITY	REFERENCE	BY
Manager		
Design		
Draw		
Draw		
Draw		
Check		

REGISTRATION

JOB No 52010300

CONSTRUCTION PACKAGE

ISSUED FOR CONSTRUCTION (FINAL) APRIL 8, 2003

ATTIC FLOOR PLAN

A1.04

© Leo A Daly Company 2003

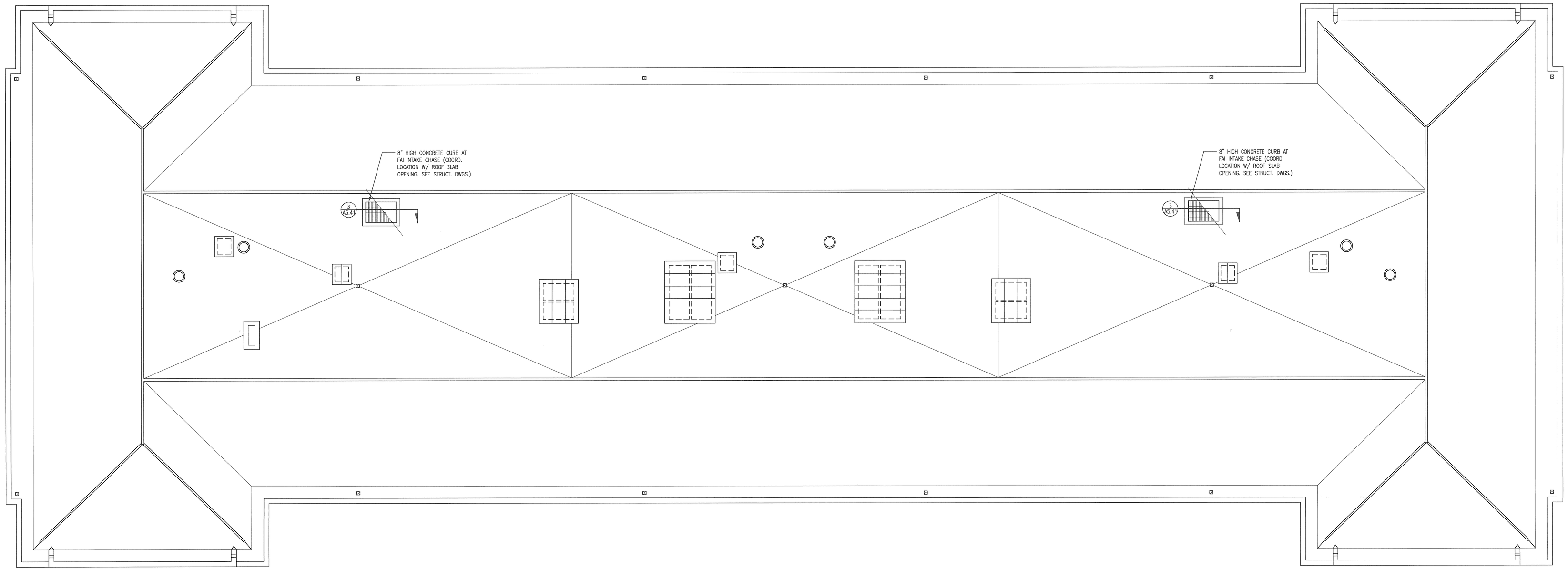

1 / A1.05 ROOF PLAN
SCALE: 1/8" = 1'-0"

Interior Improvements to DC Superior Courts Building 'B'

409 E Street, NW
Washington, DC 20001

U.S. General Services Administration
301 7th Street, SW, Room 2021
Washington, DC 20407

LEO A DALY
PLANNING ARCHITECTURE ENGINEERING INTERIORS
EST. 1915

1201 Connecticut Ave, NW
Washington DC 20036 USA
Tel 202-861-4600 Fax 202-872-8530

Dalco Interactive
10005 Old Columbia Road Suite L261
Columbia, MD 21046
Tel: 410-290-8827
Fax: 410-290-8812

Contractor
Address

KEY PLAN

ISSUES / REVISIONS

NO.	DESCRIPTION	DATE

FILE LOG

ACTIVITY	REFERENCE	BY
Manager		
Design		
Draw		
Draw		
Draw		
Check		

REGISTRATION

JOB No 52010300

CONSTRUCTION PACKAGE

ISSUED FOR CONSTRUCTION (FINAL) APRIL 8, 2003

ROOF PLAN

A1.05

© Leo A Daly Company 2003

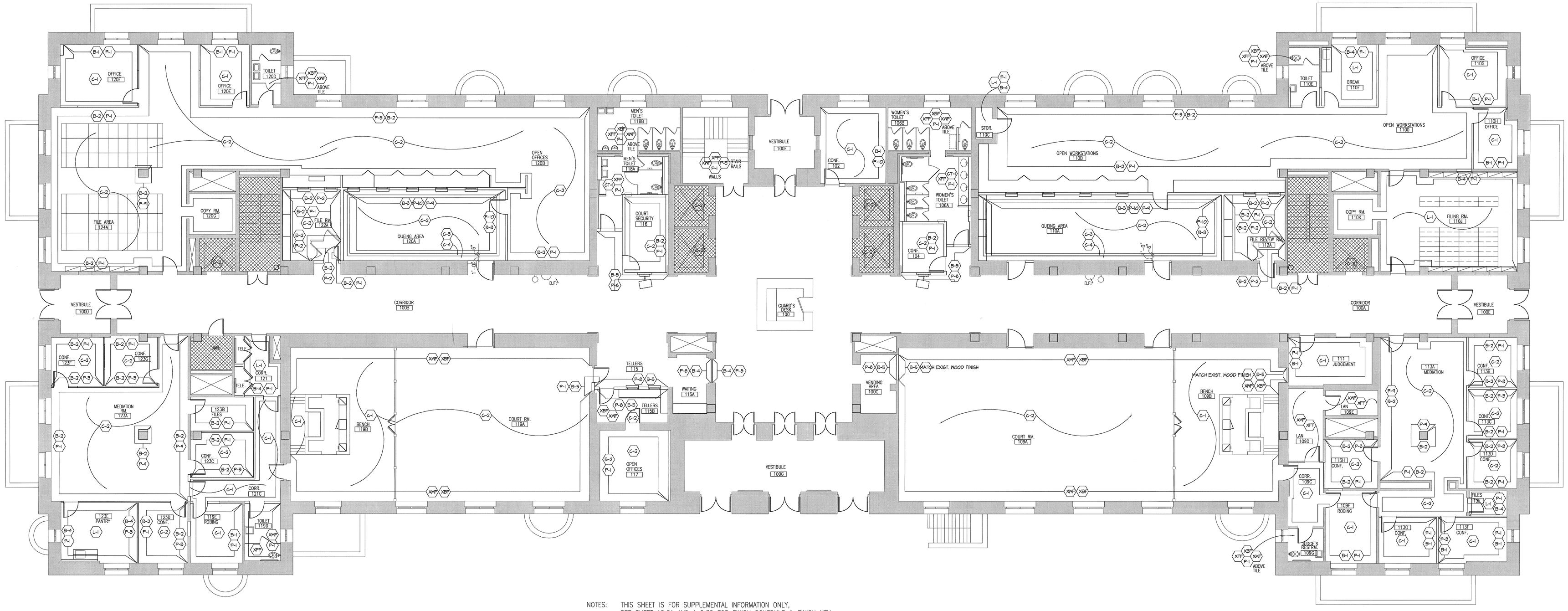

NOTES: THIS SHEET IS FOR SUPPLEMENTAL INFORMATION ONLY, SEE SHEET A2.31 AND A 2.32 FOR FINISH SCHEDULE & FINISH KEY.

1 / A1.11 FIRST FLOOR FINISH PLAN
SCALE: 1/8" = 1'-0"

Interior Improvements to DC Superior Courts Building 'B'

409 E Street, NW
Washington, DC 20001

U.S. General Services Administration
301 7th Street, SW, Room 2021
Washington, DC 20407

LEO A DALY
PLANNING ARCHITECTURE ENGINEERING INTERIORS
EST. 1915
1201 Connecticut Ave, NW
Washington DC 20036 USA
Tel 202-861-4600 Fax 202-872-8530

Dalco Incorporated
10005 Old Columbia Road Suite L261
Columbia, MD 21046
Tel: 410-290-8827
Fax: 410-290-8812

Contractor
Address

KEY PLAN

ISSUES / REVISIONS

NO.	DESCRIPTION	DATE

FILE LOG

ACTIVITY	REFERENCE	BY
Manager		
Design		
Draw		
Draw		
Draw		
Check		

REGISTRATION

JOB No 52010300

CONSTRUCTION PACKAGE

ISSUED FOR CONSTRUCTION (FINAL) APRIL 8, 2003

FIRST FLOOR FINISH PLAN

A1.11

© Leo A Daly Company 2003

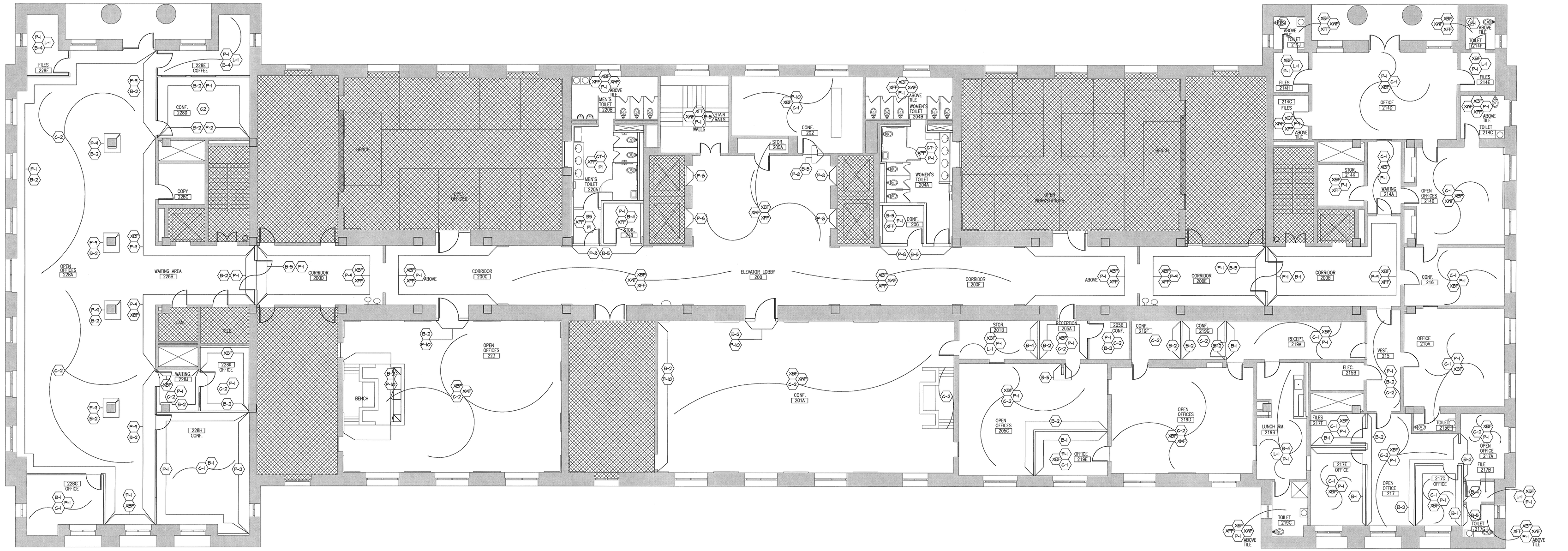

NOTES: THIS SHEET IS FOR SUPPLEMENTAL INFORMATION ONLY,
SEE SHEET A2.31 AND A 2.32 FOR FINISH SCHEDULE & FINISH KEY.

NORTH

1 / A1.12 SECOND FLOOR FINISH PLAN
SCALE: 1/8" = 1'-0"

Interior Improvements to DC Superior Courts Building 'B'

409 E Street, NW
Washington, DC 20001

U.S. General Services Administration
301 7th Street, SW, Room 2021
Washington, DC 20407

LEO A DALY
PLANNING ARCHITECTURE ENGINEERING INTERIORS
EST. 1915
1201 Connecticut Ave, NW
Washington DC 20036 USA
Tel 202-861-4600 Fax 202-872-8530

Dalco INTERIORS
10005 Old Columbia Road Suite L261
Columbia, MD 21046
Tel: 410-290-8827
Fax: 410-290-8812

Contractor
Address

KEY PLAN

ISSUES / REVISIONS

NO.	DESCRIPTION	DATE

FILE LOG

ACTIVITY	REFERENCE	BY
Manager		
Design		
Draw		
Draw		
Draw		
Check		

REGISTRATION

JOB No 52010300

CONSTRUCTION PACKAGE

ISSUED FOR CONSTRUCTION (FINAL) APRIL 8, 2003

SECOND FLOOR FINISH PLAN

A1.12

© Leo A Daly Company 2003

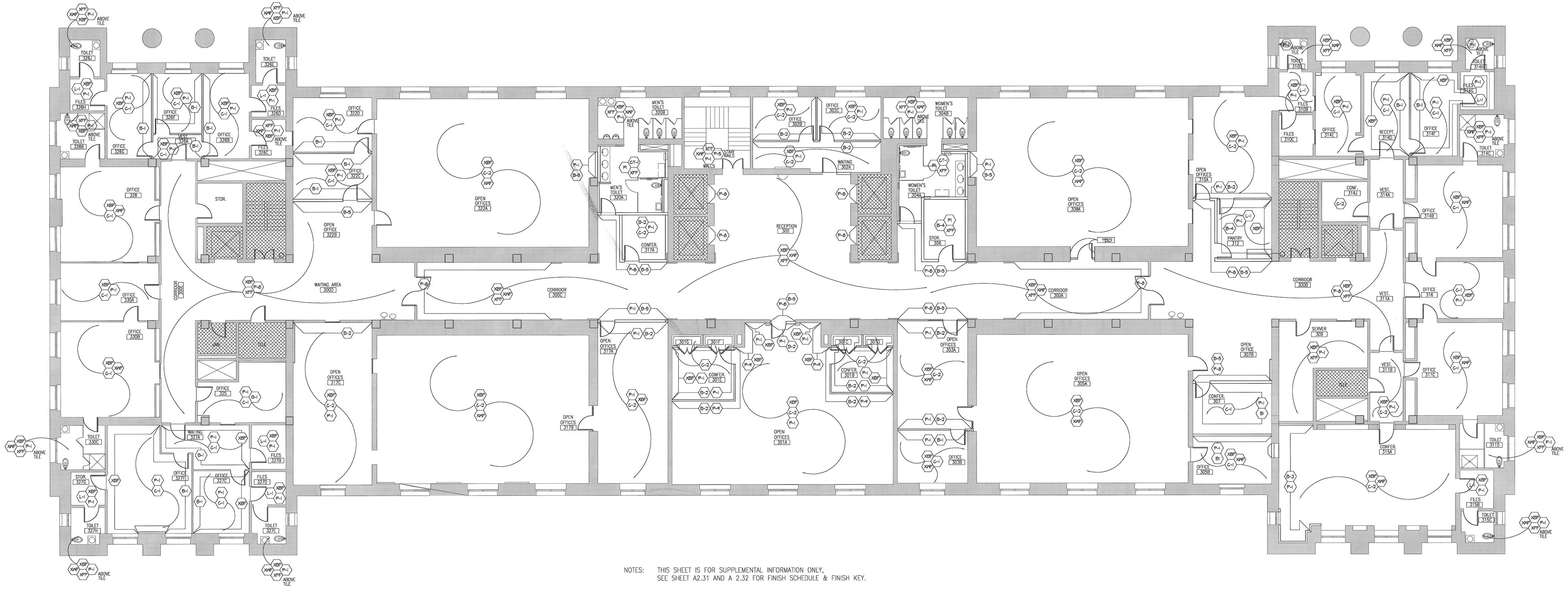

NOTES: THIS SHEET IS FOR SUPPLEMENTAL INFORMATION ONLY.
SEE SHEET A2.31 AND A 2.32 FOR FINISH SCHEDULE & FINISH KEY.

1 / A1.13 THIRD FLOOR FINISH PLAN
SCALE: 1/8" = 1'-0"

Interior Improvements to
DC Superior Courts
Building 'B'

409 E Street, NW
Washington, DC 20001

U.S. General Services Administration
301 7th Street, SW, Room 2021
Washington, DC 20407

LEO A DALY
PLANNING ARCHITECTURE ENGINEERING INTERIORS
EST. 1915
1201 Connecticut Ave, NW
Washington DC 20036 USA
Tel 202-861-4600 Fax 202-872-8530

Dalco
10005 Old Columbia Road Suite L261
Columbia, MD 21046
Tel: 410-290-8827
Fax: 410-290-8812

Contractor
Address

KEY PLAN

ISSUES / REVISIONS

NO.	DESCRIPTION	DATE

FILE LOG

ACTIVITY	REFERENCE	BY
Manager		
Design		
Draw		
Draw		
Draw		
Check		

REGISTRATION

JOB No 52010300

CONSTRUCTION PACKAGE

ISSUED FOR CONSTRUCTION
(FINAL) APRIL 8, 2003

THIRD FLOOR FINISH PLAN

A1.13

© Leo A Daly Company 2010

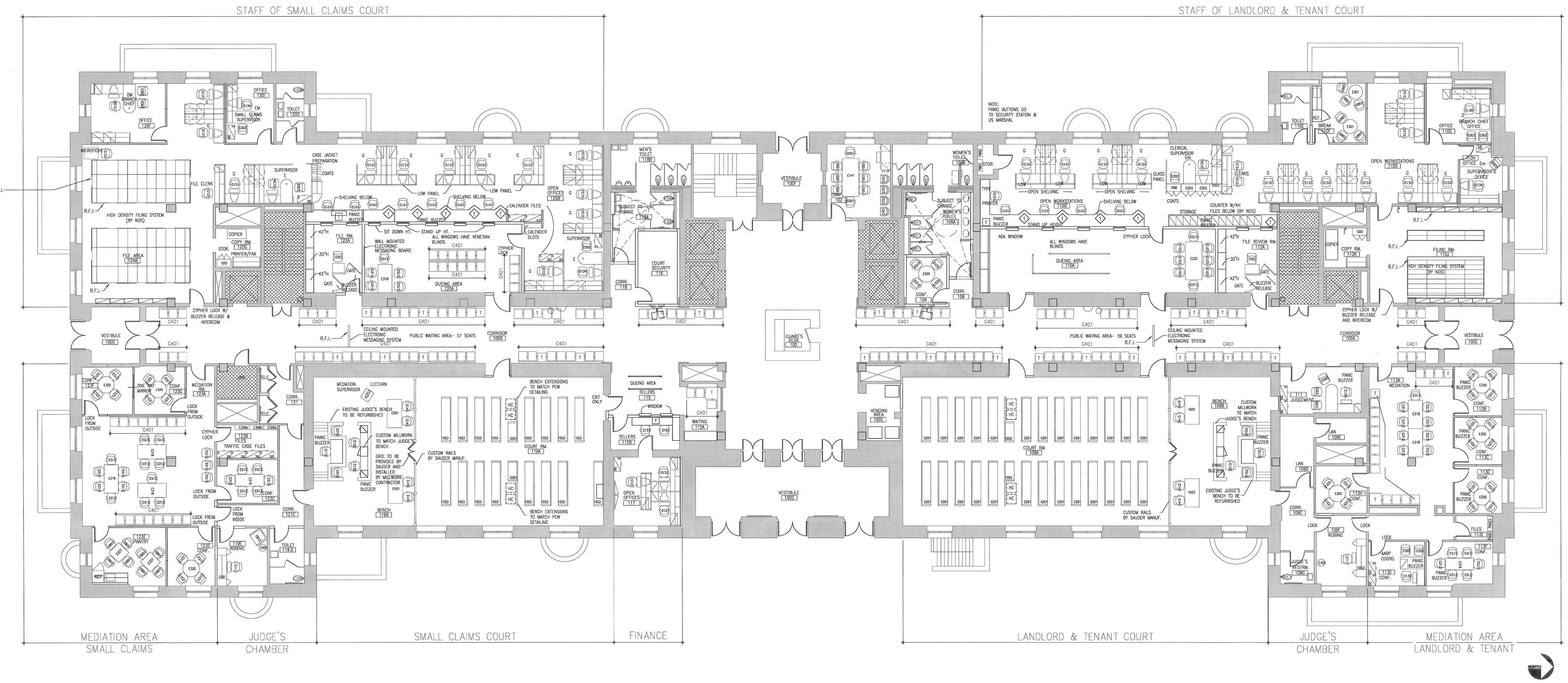

NOTES:
1. FURNITURE IS NOT IN CONTRACT.
2. THIS DRAWING IS INCLUDED FOR REFERENCE ONLY.
3. LEO A DALY ASSUMES NO RESPONSIBILITY FOR THE ACCURACY AND COMPLETENESS OF THIS DRAWING.

1 / A1.21 FIRST FLOOR FURNITURE PLAN
SCALE: 1/8" = 1'-0"

Interior Improvements to DC Superior Courts Building 'B'

409 E Street, NW
Washington, DC 20001

U.S. General Services Administration
301 7th Street, SW, Room 2021
Washington, DC 20407

LEO A DALY
1201 Connecticut Ave, NW
Washington DC 20036 USA
Tel 202-861-4600 Fax 202-872-8530

Dalco
10005 Old Columbia Road Suite L261
Columbia, MD 21046
Tel: 410-290-8827
Fax: 410-290-8812

Contractor
Address

KEY PLAN

ISSUES / REVISIONS

NO.	DESCRIPTION	DATE

FILE LOG

ACTIVITY	REFERENCE	BY
Manager		
Design		
Draw		
Draw		
Draw		
Check		

REGISTRATION

JOB No 52010300

CONSTRUCTION PACKAGE

ISSUED FOR CONSTRUCTION (FINAL) APRIL 8, 2003

FIRST FLOOR FURNITURE PLAN

A1.21

© Leo A Daly Company 2003

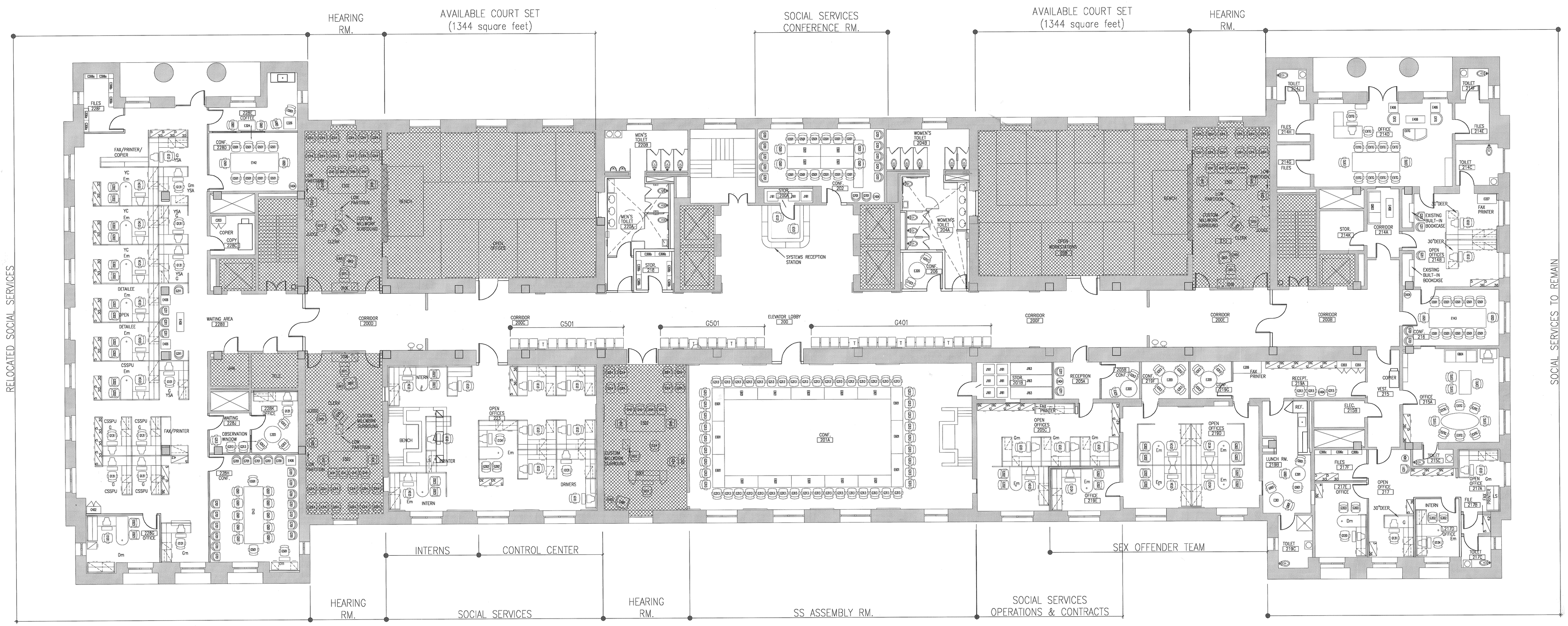

NOTES:
1. FURNITURE IS NOT IN CONTRACT.
2. THIS DRAWING IS INCLUDED FOR REFERENCE ONLY.
3. LEO A DALY ASSUMES NO RESPONSIBILITY FOR THE ACCURACY AND COMPLETENESS OF THIS DRAWING.

1 / A1.22 SECOND FLOOR FURNITURE PLAN
SCALE: 1/8" = 1'-0"

Interior Improvements to DC Superior Courts Building 'B'

409 E Street, NW
Washington, DC 20001

U.S. General Services Administration
301 7th Street, SW, Room 2021
Washington, DC 20407

LEO A DALY
PLANNING ARCHITECTURE ENGINEERING INTERIORS
EST. 1915
1201 Connecticut Ave, NW
Washington DC 20036 USA
Tel 202-861-4600 Fax 202-872-8530

Dalco
10005 Old Columbia Road Suite L261
Columbia, MD 21046
Tel: 410-290-8827
Fax: 410-290-8812

Contractor
Address

KEY PLAN

ISSUES / REVISIONS

NO.	DESCRIPTION	DATE

FILE LOG

ACTIVITY	REFERENCE	BY
Manager		
Design		
Draw		
Draw		
Draw		
Check		

REGISTRATION

JOB No 52010300

CONSTRUCTION PACKAGE

ISSUED FOR CONSTRUCTION (FINAL) APRIL 8, 2003

SECOND FLOOR FURNITURE PLAN

A1.22

© Leo A Daly Company 2003

NOTES:
1. FURNITURE IS NOT IN CONTRACT.
2. THIS DRAWING IS INCLUDED FOR REFERENCE ONLY.
3. LEO A DALY ASSUMES NO RESPONSIBILITY FOR THE ACCURACY AND COMPLETENESS OF THIS DRAWING.

1 / A1.23 THIRD FLOOR FURNITURE PLAN
SCALE: 1/8" = 1'-0"

Interior Improvements to
DC Superior Courts
Building 'B'

409 E Street, NW
Washington, DC 20001

U.S. General Services Administration
301 7th Street, SW, Room 2021
Washington, DC 20407

LEO A DALY
1201 Connecticut Ave, NW
Washington DC 20036 USA
Tel 202-861-4600 Fax 202-872-8530

Dalco
10005 Old Columbia Road Suite L261
Columbia, MD 21046
Tel: 410-290-8827
Fax: 410-290-8812

Contractor
Address

KEY PLAN

ISSUES / REVISIONS

NO.	DESCRIPTION	DATE

FILE LOG

ACTIVITY	REFERENCE	BY
Manager		
Design		
Draw		
Draw		
Draw		
Check		

REGISTRATION

JOB No 52010300

CONSTRUCTION PACKAGE

ISSUED FOR CONSTRUCTION
(FINAL) APRIL 8, 2003

THIRD FLOOR FURNITURE PLAN

A1.23

© Leo A Daly Company 2003

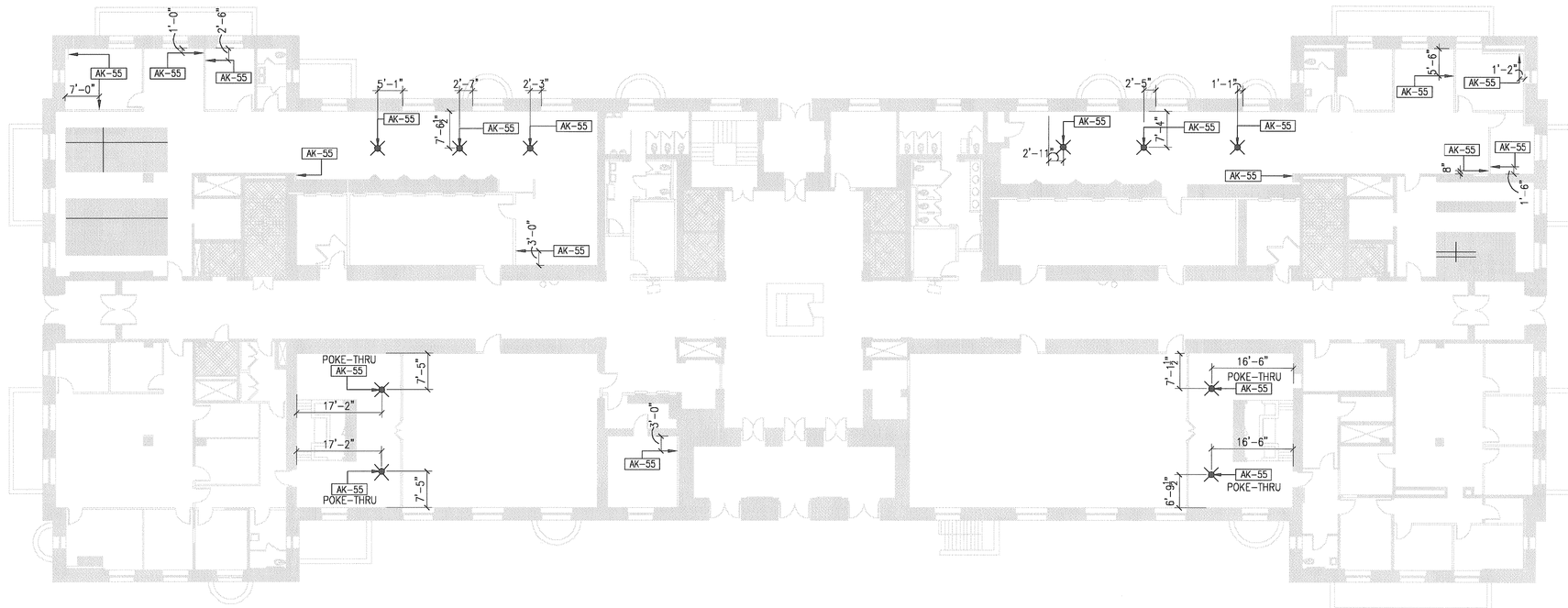

1 A1.31 FIRST FLOOR POWER/DATA PLAN
SCALE: 1/16" = 1'-0"

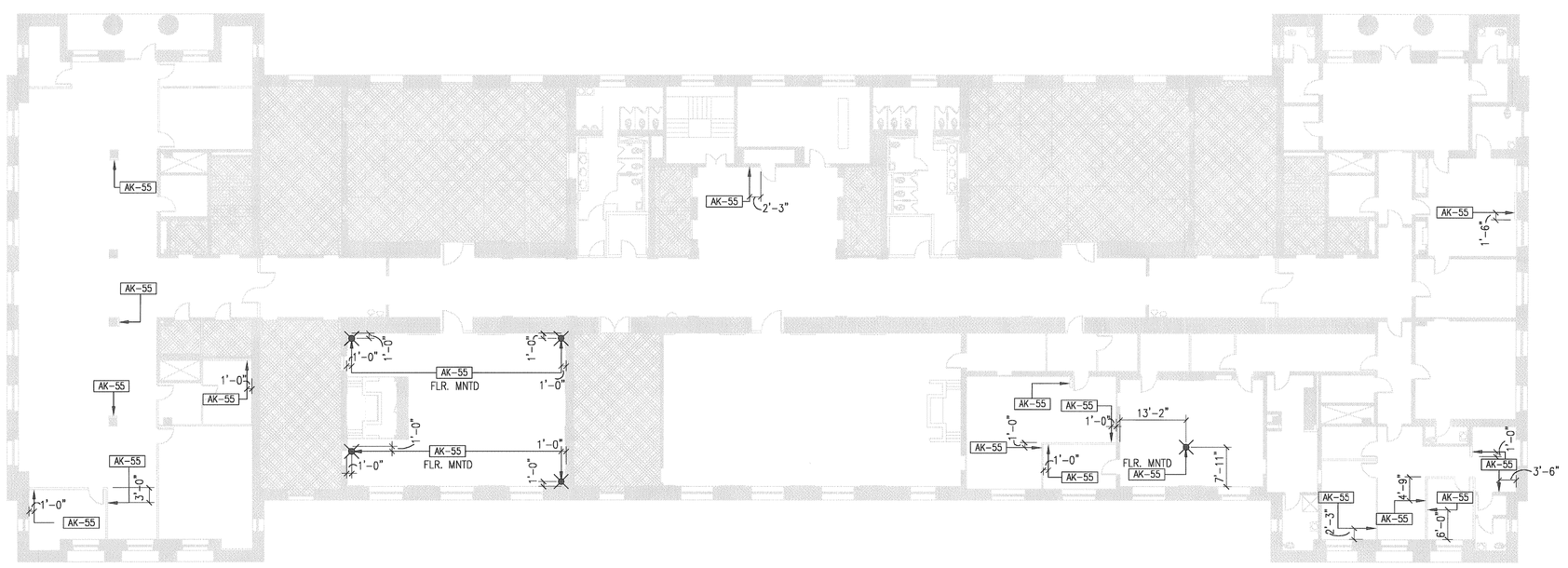

2 A1.31 SECOND FLOOR POWER/DATA PLAN
SCALE: 1/16" = 1'-0"

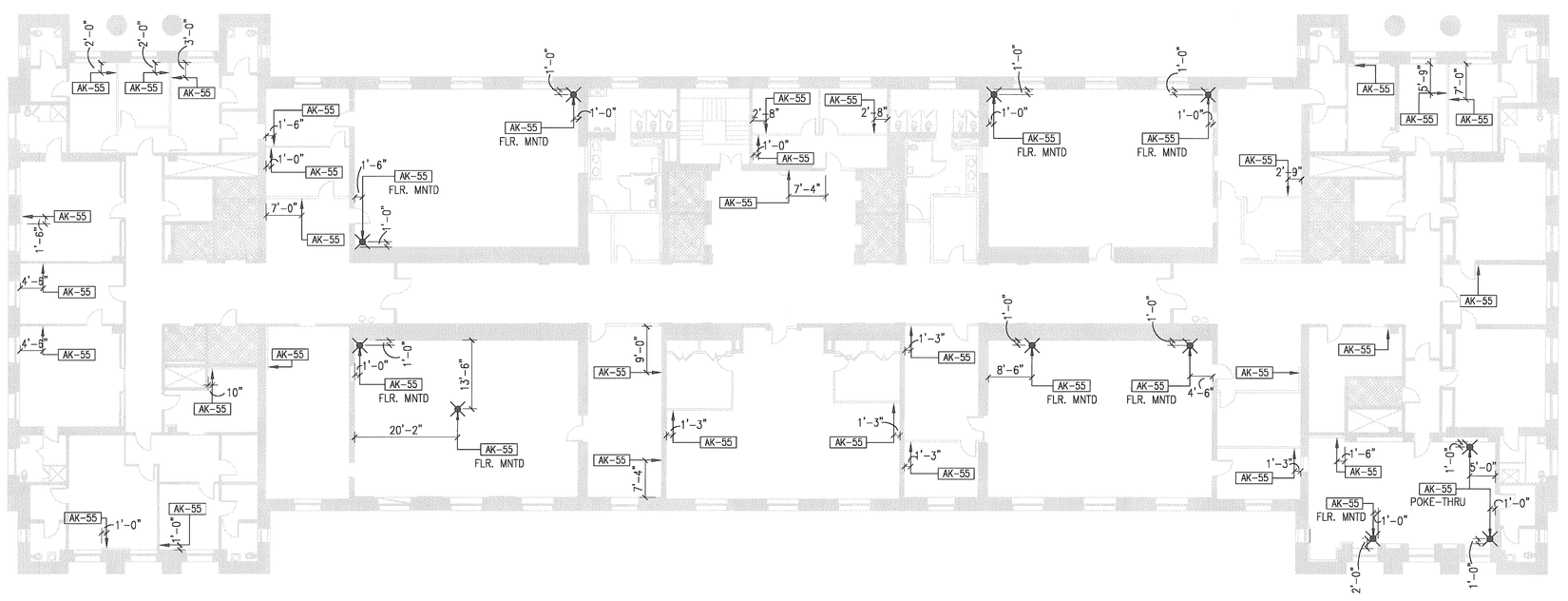

3 A1.31 THIRD FLOOR POWER/DATA PLAN
SCALE: 1/16" = 1'-0"

NOTES:

1. THESE PLANS ARE SUPPLEMENTAL TO ELECTRICAL PLANS & ARE INTENDED TO SHOW LOCATIONS FOR POWER DATA BOXES & POKE-THRUS. AT FLOOR SLABS.

2. NOTIFY ARCHITECT OF ANY DISCREPENCIES WITH ELECTRICAL DWGS. BEFORE PROCEEDING.

LEGEND & SYMBOL

– INDICATES POKE-THRU (CORE DRILL) AT FLOOR SLAB; FIRE STOP AT PENETRATION TO MAINTAIN 2-HR SEPERATION AT SLAB

AK-55

– SEE ELECTRICAL PLANS FOR POWER/DATA INFORMATION

Interior Improvements to DC Superior Courts Building 'B'

409 E Street, NW
Washington, DC 20001

U.S. General Services Administration
301 7th Street, SW, Room 2021
Washington, DC 20407

LEO A DALY
PLANNING ARCHITECTURE ENGINEERING INTERIORS
EST. 1915
1201 Connecticut Ave, NW
Washington DC 20036 USA
Tel 202-861-4600 Fax 202-872-8530

Dalco
10005 Old Columbia Road Suite L261
Columbia, MD 21046
Tel: 410-290-8827
Fac: 410-290-8812

Contractor
Address

KEY PLAN

ISSUES / REVISIONS

NO.	DESCRIPTION	DATE

FILE LOG

ACTIVITY	REFERENCE	RV
Manager		
Design		
Draw		
Draw		
Draw		
Check		

REGISTRATION

JOB No 52010300

CONSTRUCTION PACKAGE

ISSUED FOR CONSTRUCTION (FINAL) APRIL 8, 2003

1ST, 2ND & 3RD FLOOR POWER/DATA LOCATION PLANS

A1.31

© Leo A Daly Company 2003

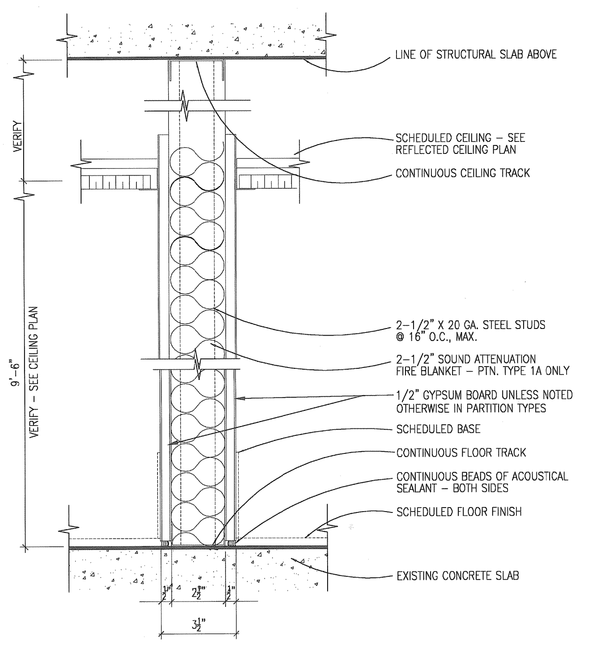

1	PARTITION TYPE 1 – TYPICAL CEILING HIGH PARTITION SCALE: 3" = 1'-0"
1A	PARTITION TYPE 1A – TYPICAL CEILING HIGH PARTITION WITH SOUND ATTENUATION SCALE: 3" = 1'-0"
1B	PARTITION TYPE 1B – SAME AS TYPE 1A BUT WITH 5/8" GYP. BD. SCALE: 3" = 1'-0"

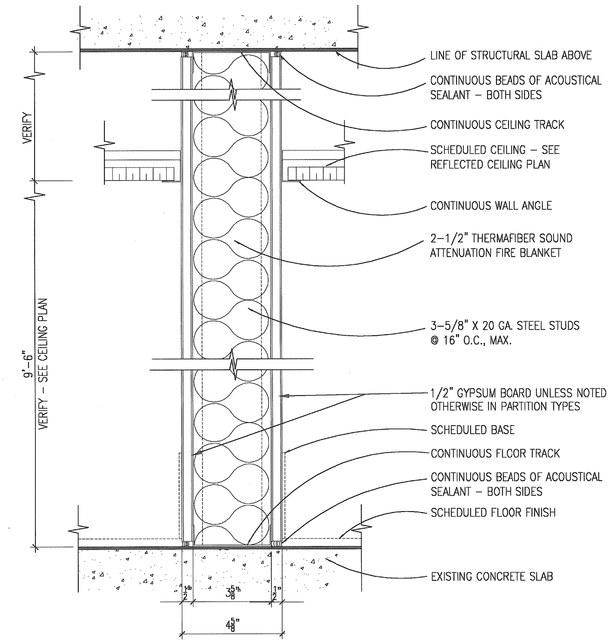

2	PARTITION TYPE2 – TYPICAL SLAB HIGH PARTITION WITH SOUND ATTENUATION SCALE: 3" = 1'-0"
2A	PARTITION TYPE 2A – SAME AS TYPE 2 BUT WITH 6" STEEL STUDS SCALE: 3" = 1'-0"
2B	PARTITION TYPE 2A – SAME AS TYPE 2 BUT WITH 5/8" GYP. BD. – STC 49 SCALE: 3" = 1'-0"

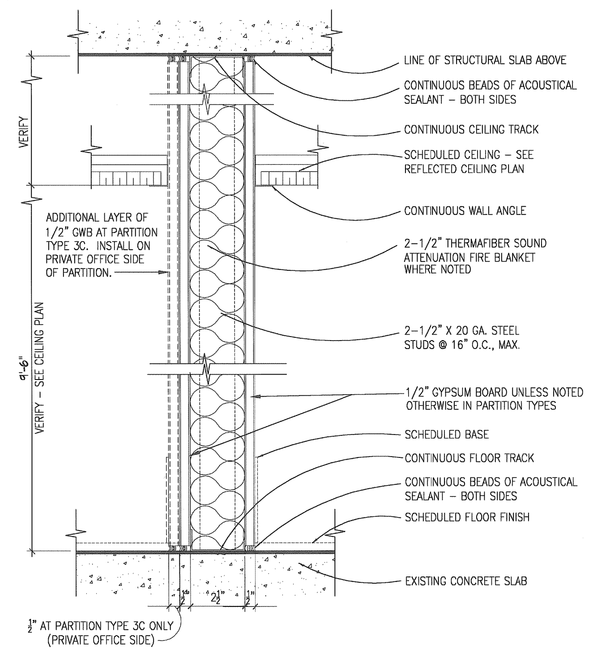

3	PARTITION TYPE 3 – TYPICAL SLAB TO SLAB PARTITION SCALE: 3" = 1'-0"
3A	PARTITION TYPE 3A – TYPICAL SLAB TO SLAB PARTITION WITH SOUND ATTENUATION SCALE: 3" = 1'-0"
3B	PARTITION TYPE 3B – SAME AS 3A BUT WITH 5/8" GYP. BD. – STC 47 SCALE: 3" = 1'-0"
3C	PARTITION TYPE 3C – SAME AS 3A BUT WITH ONE ADDITIONAL LAYER OF 1/2" GYP. BD. – STC 50 SCALE: 3" = 1'-0"

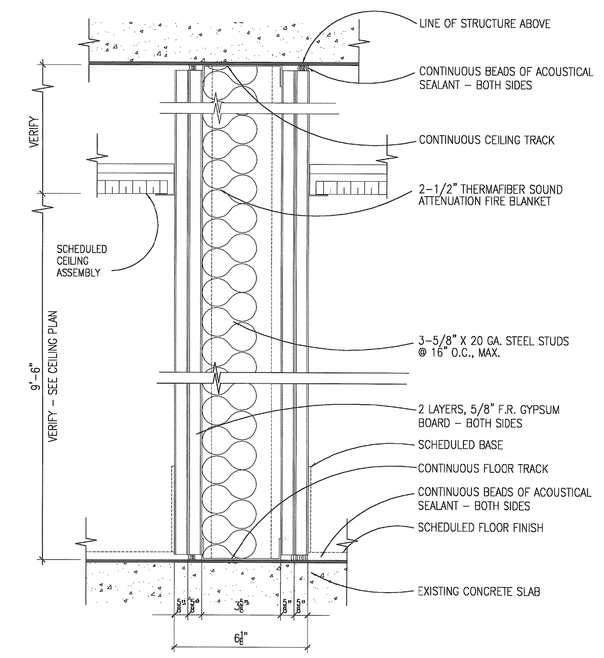

4	PARTITION TYPE4 – SLAB HIGH PARTITION WITH SOUND ATTENUATION – STC 56 SCALE: 3" = 1'-0"

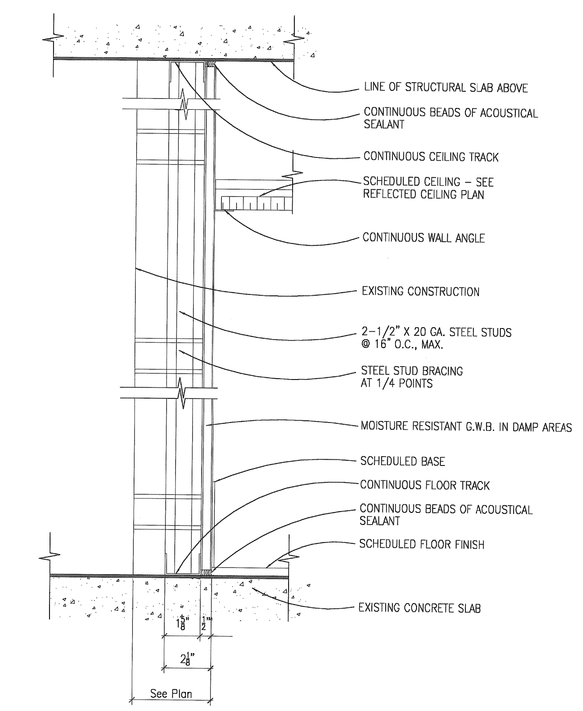

5	PARTITION TYPE 5 – FURRED PARTITION SCALE: 3" = 1'-0"

PARTITION NOTES

1. REFER TO ARCHITECTURAL PLAN FOR THE LOCATION OF PARTITION TYPES INDICATED.

2. EXCEPT AS OTHERWISE NOTED, GYPSUM BOARD UTILIZED IN WET AREAS SHALL BE MOISTURED RESISTANT TYPE.

3. PROVIDE ACOUSTICAL SEALANT AROUND ALL WALL PENETRATIONS, SUCH AS ELECTRICAL BOXES, ETC., WITH SOUND ATTENUATION TO PREVENT NOISE TRANSFER.

4. ALL CHASE WALLS SHALL BE CROSS–BRACED TO ADJACENT WALL AND SHALL UTILIZE A MINIMUM OF 1–1/2" OF SOUND ATTENUATION BLANKETS.

5. REINFORCE AND BRACE WALLS AS REQUIRED TO SUPPORT THE INSTALLATION OF WALL MOUNTED TOILET AND KITCHEN EQUIPMENT, CABINETRY, AND SHELVING WHETHER SPECIFICALLY INDICATED BY THE DRAWINGS OR NOT.

6. REFER TO SPECIFICATIONS FOR THE GAUGE OF ANY COLD ROLLED STEEL FRAMING MEMBER OR ACCESSORY NOT SPECIFICALLY NOTED HEREIN.

7. CONFIRM THE GAUGES REQUIRED FOR COLD ROLLED STEEL FRAMING MEMBERS IN RELATION TO THEIR APPLICATION AND/OR FUNCTION AND INCREASE THE GAUGES INDICATED BY THE PARTITION TYPES IF REQUIRED. THE CONTRACTOR SHALL NOT DECREASE THE GAUGES OF MEMBERS WITHOUT THE PRIOR WRITTEN CONSENT OF THE ARCHITECT AND THE OWNER.

8. ALL FIRE RATED PARTITIONS SHALL FIT TIGHT AGAINST OVERHEAD STRUCTURE & SHALL BE SEALED W/ CONT. BEAD OF SMOKE SEAL ON BOTH SIDES.

9. PROVIDE NONCOMBUSTIBLE FIRE STOPPING MATERIAL AND SEAL AROUND PENETRATIONS IN FLOORS AND PARTITIONS IN ORDER TO PROVIDE REQUIRED FIRE SEPARATION BARRIER.

10. ALL VERTICAL PIPES AND DUSTS IN SPACES SHALL BE FURRED AND FINISHED IN THE SAME MATERIAL AS THE ADJACENT WALL OR COLUMN WHETHER INDICATED OR NOT ON THE ARCHITECTURAL DRAWINGS.

11. REFER TO THE SPECIFICATIONS FOR INSULATION CRITERIA & REQUIREMENTS.

12. STAGGER ALL BACK TO BACK WALL BOXES @ MIN. OF 12" O.C. & PACK WITH SOUND BATTS PRIOR TO INSULATION OF WALL BOX.

13. A. SOUND ATTENUATION – PROVIDE CLASS OF MINERAL FIBER SOUND ATTENUATION BLANKET COMPLYING WITH ASTM C665, SIZE TO FIT STUD WIDTH. CONSTRUCT PARTITIONS INDICATED TO BE SOUND ATTENUATING IN ACCORDANCE WITH ASTM E90 TO PROVIDE THE MINIMUM STC RATING INDICATED: CLOSED OFFICES: STC 40; CONFERENCE ROOMS STC 45; CORRIDOR PARTITIONS STC 40; CLOSED OFFICES OF (150 SF) OR GREATER STC 50; AND TOILET ROOMS STC 40.

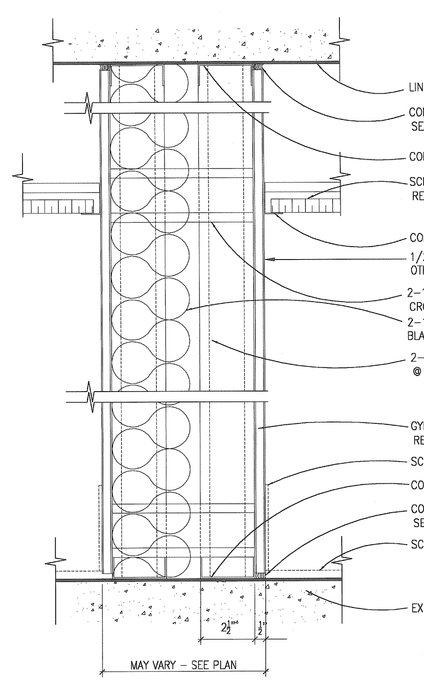

6	PARTITION TYPE6 – TYPICAL SLAB HIGH CHASE WALL SCALE: 3" = 1'-0"
6A	SAME AS TYPE 6 BUT WITH SOUND ATTENUATION – STC 52 BASED ON SIMILAR ASSEMBLY SCALE: 3" = 1'-0"

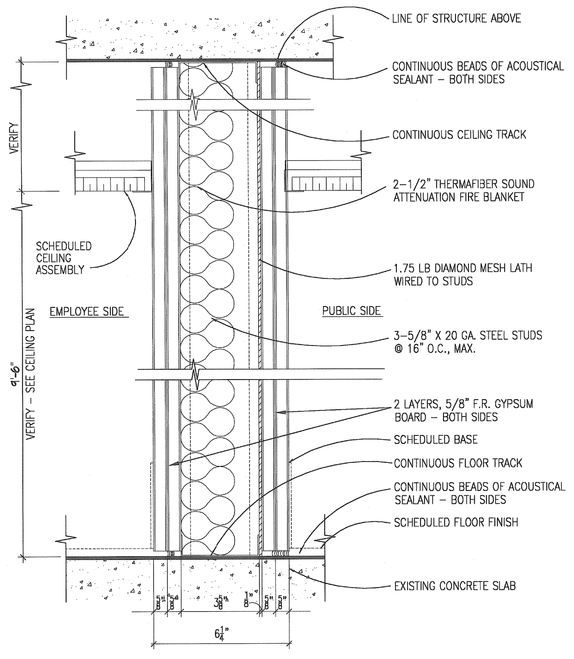

7	PARTITION TYPE 7 – SECURITY PARTITION WITH SOUND ATTENUATION – STC 56 SCALE: 3" = 1'-0"

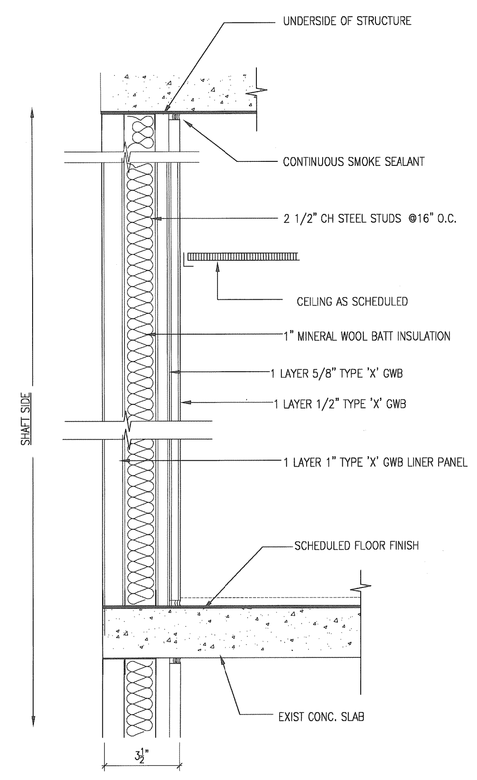

8	PARTITION TYPE 8 – FIRE RATED SHAFT WALL WITH SOUND ATTENUATION – 2 HOUR UL DESIGN # U459 SCALE: 3" = 1'-0"

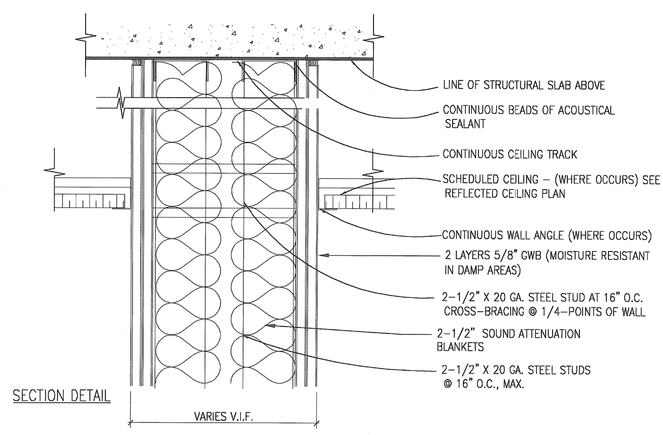

SECTION DETAIL

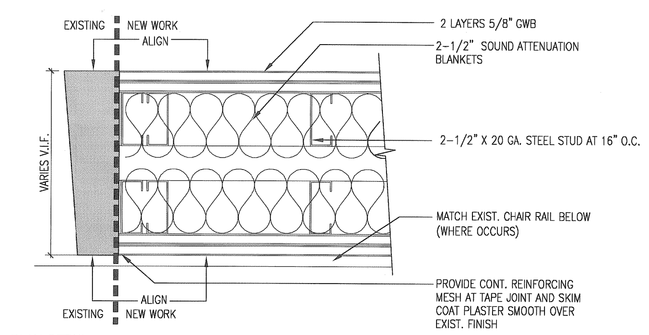

PLAN DETAIL

9	PARTITION TYPE 7 – INFILL PARTITION AT EXISTING WALL – STC 56 BASED ON SIMILAR ASSEMBLY SCALE: 3" = 1'-0"

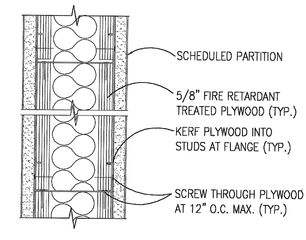

NOTES:

1. DETAIL INDICATES BLOCKING ON BOTH SIDES OF THE PARTITION. REFER TO THE ARCHITECTURAL PLAN FOR INDICATION OF WHICH SIDE OF PARTITION ON WHICH BLOCKING IS TO BE INSTALLED.

2. WHERE INDICATED BY THE ARCHITECTURAL FLOOR PLAN, BLOCKING SHALL EXTEND FROM FLOOR TO CEILING.

BLOCKING DETAIL

Interior Improvements to
DC Superior Courts
Building 'B'

409 E Street, NW
Washington, DC 20001

U.S. General Services Administration
301 7th Street, SW, Room 202
Washington, DC 20407

LEO A DALY
PLANNING ARCHITECTURE INTERIORS
EST. 1915
1201 Connecticut Ave, NW
Washington DC 20036 USA
Tel 202-861-4600 Fax 202-872-8530

Dalco
10005 Old Columbia Road Suite L261
Columbia, MD 21046
Tel: 410-290-8827
Fax: 410-290-8812

Contractor
Address

KEY PLAN

ISSUES / REVISIONS

NO.	DESCRIPTION	DATE

FILE LOG

ACTIVITY	REFERENCE	BY
Manager		
Design		
Draw		
Draw		
Draw		
Check		

REGISTRATION

JOB No 52010300

CONSTRUCTION PACKAGE

ISSUED FOR CONSTRUCTION
(FINAL) APRIL 8, 2003

PARTITION TYPES

A2.11

© Leo A Daly Company 2003

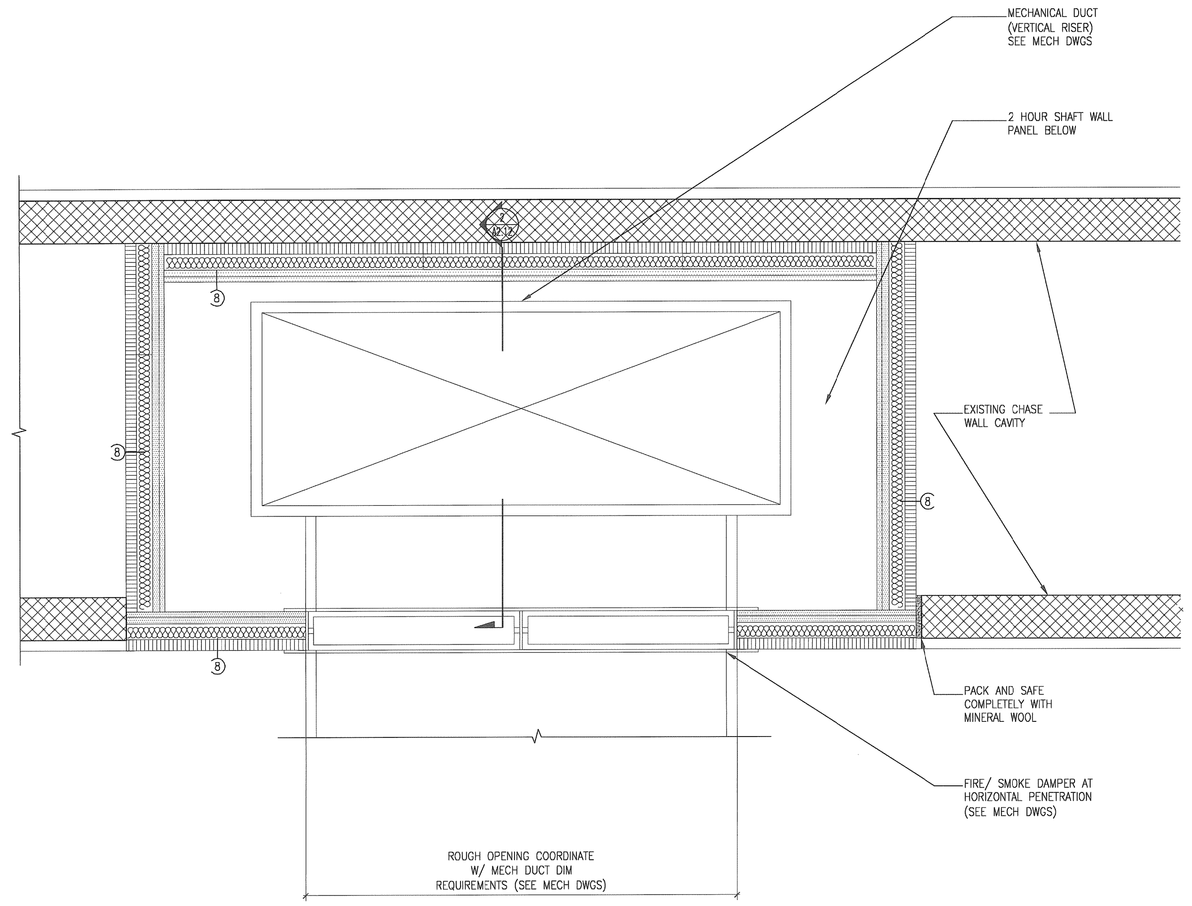

1 A2.12 PLAN DTL. AT FIRE RATED DUCT PENETRATION ENCLOSURE
SCALE: 3/4" = 1'-0"

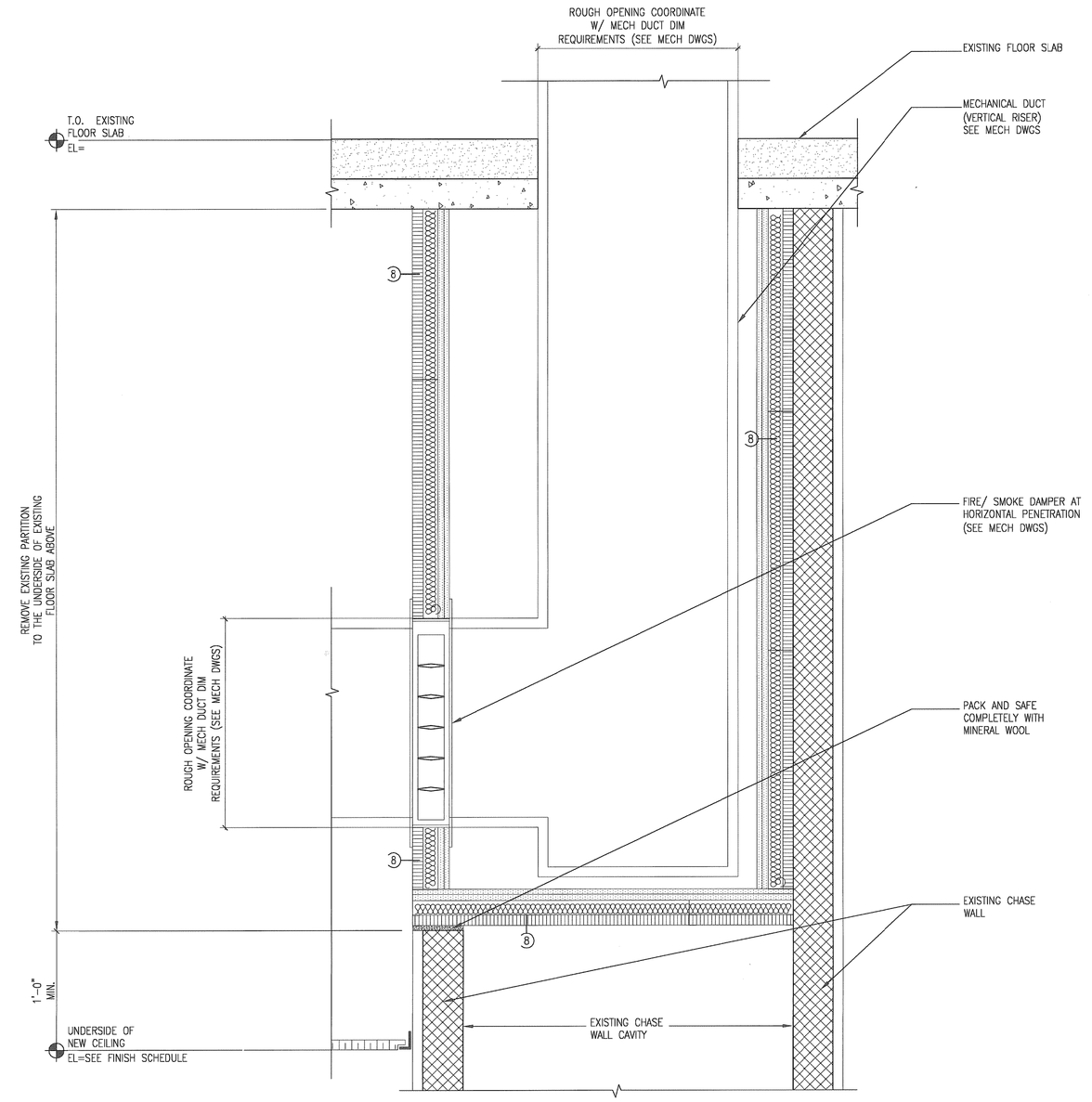

2 A2.12 SECTION AT FIRE RATED DUCT PENETRATION ENCLOSURE
SCALE: 3/4" = 1'-0"

GENERAL FIRESTOPPING NOTES:

1. ALL ASSEMBLIES SHALL BE U.L. APPROVED TO MAINTAIN 2 HOUR FIRE RATING AND SEPARATION BETWEEN FLOORS
2. CONSTRUCTION ASSEMBLIES THAT ABUTT EXISTING FLOOR SLAB/ STRUCTURE ABOVE SHALL BE SEALED WITH CONTINUOUS BEADS OF SMOKE SEAL

Interior Improvements to
DC Superior Courts
Building 'B'

409 E Street, NW
Washington, DC 20001

U.S. General Services Administration
301 7th Street, SW, Room 2021
Washington, DC 20407

LEO A DALY
PLANNING
ARCHITECTURE
ENGINEERING
INTERIORS
EST. 1915

1201 Connecticut Ave, NW
Washington DC 20036 USA
Tel 202-861-4600 Fax 202-872-8530

Dalco INCORPORATED
10005 Old Columbia Road Suite L261
Columbia, MD 21046
Tel: 410-290-8827
Fax: 410-290-8812

Contractor
Address

KEY PLAN

ISSUES / REVISIONS

NO.	DESCRIPTION	DATE

FILE LOG

ACTIVITY	REFERENCE	BY
Manager		
Design		
Draw		
Draw		
Draw		
Check		

REGISTRATION

JOB No 52010300

CONSTRUCTION PACKAGE

ISSUED FOR CONSTRUCTION
(FINAL) APRIL 8, 2003

RATED ENCLOSURE DETAILS

A2.12

© Leo A Daly Company 2003

DOOR SCHEDULE

DOOR NUMBER	DOOR SIZE W	DOOR SIZE H	DOOR SIZE THK.	MATR'L	FINISH	DOOR TYPE	FRAME TYPE	HARDWARE SET	REMARKS	HEAD DETAIL	JAMB DETAIL	THRESHOLD DETAIL
FIRST FLOOR												
100C	–	–	–	–	–	–	3	–	–	6	12	–
102	3'-0"	VFY	1-3/4"	WD/MTL	STAIN	1	1A	5	7	2A	8A	13
104	3'-0"	7'-0"	1-3/4"	WD/MTL	STAIN	1	1	5	7	1	7	13
106	3'-0"	7'-0"	1-3/4"	WD/MTL	STAIN	3	1	8	7	1	7	15
106B	–	–	–	–	–	–	1	–	–	5	11	–
107	3'-6"	VFY	1-3/4"	WD/MTL	STAIN	1	1A	5	7	2	8	13
108	3'-6"	VFY	1-3/4"	WD/MTL	STAIN	1	1A	5	7	2	8	13
109	3'-6"	VFY	1-3/4"	WD/MTL	STAIN	1	1A	5	7	2	8	13
109C	EX	EX	EX	EX	EX	EX	EX	12B	1, 2, 8, 11, 12	EX	EX	–
109D	EX	EX	EX	EX	PAINT	EX	EX	3A	1, 2, 8, 11, 12	EX	EX	13
109E	EX	EX	EX	EX	PAINT	EX	EX	3A	1, 2, 8, 11, 12	EX	EX	13
109F	EX	EX	EX	EX	STAIN	EX	EX	12	1, 2, 8, 10, 12	EX	EX	–
109G	EX	EX	EX	EX	STAIN	EX	EX	7A	1, 2, 8, 12	EX	EX	13
109H	EX	EX	EX	EX	STAIN	EX	EX	12B	1, 2, 8, 10, 12	EX	EX	–
110	3'-6"	VFY	1-3/4"	WD/MTL	STAIN	1	1A	5	7	2	8	13
110B	3'-0"	7'-0"	1-3/4"	SCWD	PAINT	1	1A	12	10.	1	7	–
110C	–	–	–	–	–	–	–	–	N.I.C.	–	–	14
110E	3'-0"	7'-0"	1-3/4"	SCWD	PAINT	3	1A	7	–	1	7	13
110F	3'-0"	7'-0"	1-3/4"	SCWD	PAINT	1	1A	1	–	1	7	14
110G	3'-0"	7'-0"	1-3/4"	SCWD	PAINT	1	1A	2	–	1	7	–
110H	3'-0"	7'-0"	1-3/4"	SCWD	PAINT	1	1A	2	–	1	7	–
110J	EX	EX	EX	EX	PAINT	EX	EX	1C	1, 2, 8, 12	EX	EX	14
111	VFY	VFY	1-3/4"	WD/MTL	STAIN	1	EX	5A	7, 12,13	EX	EX	13
112	VFY	VFY	1-3/4"	WD/MTL	STAIN	1	EX	5	7, 12	EX	EX	13
112A	3'-0"	7'-0"	1-3/4"	SCWD	PAINT	1	1A	5	–	1	7	–
112B	3'-0"	7'-0"	1-3/4"	SCWD	PAINT	1	1A	5	–	1	7	–
113	VFY	VFY	1-3/4"	WD/MTL	STAIN	1	EX	5A	7, 12,13	EX	EX	13
113B	3'-0"	7'-0"	1-3/4"	SCWD	PAINT	1	1A	1	–	1	7	–
113C	3'-0"	7'-0"	1-3/4"	SCWD	PAINT	1	1A	1	–	1	7	–
113D	3'-0"	7'-0"	1-3/4"	SCWD	PAINT	1	1A	1	–	1	7	–
113E	EX	EX	EX	EX	PAINT	EX	EX	3A	1, 2, 8, 11, 12	EX	EX	14
113F	3'-0"	7'-0"	1-3/4"	SCWD	PAINT	1	1A	1	–	1	7	–
113G	3'-0"	7'-0"	1-3/4"	SCWD	PAINT	1	1A	1	–	1	7	–
113H	VFY	VFY	1-3/4"	SCWD	PAINT	1	EX	1	12	EX	EX	–
114	VFY	VFY	1-3/4"	WD/MTL	STAIN	1	EX	5E	7, 12	EX	EX	14A
115	3'-0"	7'-0"	1-3/4"	WD/MTL	STAIN	1	1A	12	7, 10.	1	7	13
116	3'-0"	7'-0"	1-3/4"	WD/MTL	STAIN	1	1A	12	7, 10.	1	7	13
117	EX	EX	EX	EX	STAIN	EX	EX	2C	1, 2, 8, 12	EX	EX	–
118	3'-0"	7'-0"	1-3/4"	WD/MTL	STAIN	3	1A	8	7	1	7	15
118B	–	–	–	–	–	–	3	–	–	5	11	–
119	3'-6"	VFY	1-3/4"	WD/MTL	STAIN	1	1A	5	7	2	8	13
119C	EX	EX	EX	EX	STAIN	1	EX	12B	1, 2, 8, 10, 12	EX	EX	–
119D	3'-0"	7'-0"	1-3/4"	SCWD	STAIN	3	1A	7A	1, 2, 8	1	7	13
119E	3'-0"	7'-0"	1-3/4"	SCWD	PAINT	1	1A	12	10.	1	7	–
119F	3'-0"	7'-0"	1-3/4"	SCWD	PAINT	1	1A	12	10.	1	7	–
119G	3'-0"	VFY	1-3/4"	WD/MTL	STAIN	1	1A	5	7	2	8	13
120	3'-6"	VFY	1-3/4"	WD/MTL	STAIN	1	1A	5	7	2	8	13
120B	3'-0"	7'-0"	1-3/4"	SCWD	PAINT	1	1A	12A	10.	1	7	–
120D	EX	EX	EX	EX	PAINT	EX	EX	7A	1, 2, 8, 12	EX	EX	13
120E	3'-0"	7'-0"	1-3/4"	SCWD	PAINT	1	1A	2	–	1	7	–
120F	3'-0"	7'-0"	1-3/4"	SCWD	PAINT	1	1A	2	–	1	7	–
121	VFY	VFY	1-3/4"	WD/MTL	STAIN	1	EX	5	7, 12, 13	EX	EX	14A
121A	4'-6"	7'-0"	1-3/4"	SCWD	PAINT	2	2A	10	–	1	7	–
121B	6'-0"	7'-0"	1-3/4"	SCWD	PAINT	2	2A	10	11.	1	7	–
121C	3'-0"	7'-0"	1-3/4"	SCWD	PAINT	1	1A	12	10.	1	7	14
122	3'-0"	7'-0"	1-3/4"	WD/MTL	STAIN	1	1A	5	7	2	8	13
122A	3'-0"	7'-0"	1-3/4"	SCWD	PAINT	1	1A	5	–	1	7	–
122B	3'-0"	7'-0"	1-3/4"	SCWD	PAINT	1	1A	5	–	1	7	–
123	VFY	VFY	1-3/4"	WD/MTL	STAIN	1	EX	5E	7, 12	EX	EX	13
123B	VFY	VFY	1-3/4"	SCWD	PAINT	1	EX	1	12	EX	EX	–
123C	3'-0"	7'-0"	1-3/4"	SCWD	PAINT	1	1A	1	–	1	7	–
123D	3'-0"	7'-0"	1-3/4"	SCWD	PAINT	1	1A	1	–	1	7	–
123E	3'-0"	7'-0"	1-3/4"	SCWD	PAINT	1	1A	1	–	1	7	14A
123F	3'-0"	7'-0"	1-3/4"	SCWD	PAINT	1	1A	1	–	1	7	–
123G	3'-0"	7'-0"	1-3/4"	SCWD	PAINT	1	1A	1	–	1	7	–
124	VFY	VFY	1-3/4"	WD/MTL	STAIN	1	EX	5E	7, 12	EX	EX	13
125	VFY	VFY	1-3/4"	WD/MTL	STAIN	1	EX	3	7, 12, 13	EX	EX	–

SECOND FLOOR

DOOR NUMBER	DOOR SIZE W	DOOR SIZE H	DOOR SIZE THK.	MATR'L	FINISH	DOOR TYPE	FRAME TYPE	HARDWARE SET	REMARKS	JAMB DETAIL	HEAD DETAIL	THRESHOLD DETAIL
200A	3'-0"	7'-0"	1-3/4"	WD/MTL	STAIN	1	1A	3	7	2A	8A	–
200C	6'-0"	7'-0"	1-3/4"	WD/MTL	STAIN	2	2A	11	–	1	7	–
201	3'-6"	VFY	1-3/4"	WD/MTL	STAIN	1	1A	5B	7	2	8	13
201B	EX	EX	EX	EX	STAIN	EX	EX	3A	1, 2 , 8, 12	EX	EX	14
201C	–	–	–	–	–	–	–	–	NIC	–	–	–
201D	EX	EX	EX	EX	STAIN	EX	EX	EX	1, 2, 8, 9, 12	EX	EX	–
202	3'-0"	7'-0"	1-3/4"	WD/MTL	STAIN	1	1A	5	7	2A	8A	–
204	3'-0"	7'-0"	1-3/4"	WD/MTL	STAIN	3	1A	8	7	1	7	15
204B	–	–	–	–	–	–	3	–	–	5	11	–
205	VFY	VFY	1-3/4"	WD/MTL	STAIN	1	EX	5G	7, 12	EX	EX	13
205B	3'-0"	7'-0"	1-3/4"	SCWD	PAINT	1	1A	1C	–	1	7	–
205C	3'-0"	7'-0"	1-3/4"	SCWD	PAINT	1	EX	1A	1, 2 , 8, 12	EX	EX	–
206	3'-0"	7'-0"	1-3/4"	WD/MTL	STAIN	1	1A	5	7	1	7	–
208	3'-6"	7'-0"	1-3/4"	WD/MTL	STAIN	1	1A	5B	7	3	9	–
210	–	–	–	–	–	–	–	–	NIC	–	–	–
212	–	–	–	–	–	–	–	–	NIC	–	–	–
214	VFY	VFY	1-3/4"	WD/MTL	STAIN	1	EX	5E	7, 12	EX	EX	13
214A	EX	EX	EX	EX	STAIN	EX	EX	EX	1, 2, 8, 9	EX	EX	–
214B	EX	EX	EX	EX	STAIN	EX	EX	5D	1, 2, 8, 12	EX	EX	–
214C	EX	EX	EX	EX	STAIN	EX	EX	7A	1, 2, 8, 12	EX	EX	13
214D	EX	EX	EX	EX	STAIN	EX	EX	2C	1, 2, 8, 12	EX	EX	–
214E	EX	EX	EX	EX	STAIN	EX	EX	1C	1, 2, 8, 12	EX	EX	14
214F	EX	EX	EX	EX	STAIN	EX	EX	7A	1, 2, 8, 12	EX	EX	14B
214G	EX	EX	EX	EX	STAIN	EX	EX	1C	1, 2, 8, 12	EX	EX	13
214H	EX	EX	EX	EX	STAIN	EX	EX	1C	1, 2, 8, 12	EX	EX	14
214J	EX	EX	EX	EX	STAIN	EX	EX	7A	1, 2, 8, 12	EX	EX	14B
214K	EX	EX	EX	EX	STAIN	EX	EX	3A	1, 2, 8, 12	EX	EX	13
215	VFY	VFY	1-3/4"	WD/MTL	STAIN	1	EX	5E	7, 12	EX	EX	13
215A	EX	EX	EX	EX	STAIN	EX	EX	2C	1, 2, 8, 12	EX	EX	–
215B	EX	EX	EX	EX	STAIN	EX	EX	3A	1, 2, 8, 12	EX	EX	–
215C	EX	EX	EX	EX	STAIN	EX	EX	7A	1, 2, 8, 12	EX	EX	–
216	VFY	VFY	1-3/4"	WD/MTL	STAIN	1	EX	5D	7	EX	EX	–
216A	EX	EX	EX	EX	STAIN	EX	EX	2C	1, 2, 8, 12	EX	EX	–
216B	EX	EX	EX	EX	STAIN				1, 2, 8, 9, 12			–
217	EX	EX	EX	EX	STAIN	EX	EX	5E	1, 2, 8, 12	EX	EX	–
217B	3'-0"	7'-0"	1-3/4"	SCWD	PAINT	1	EX	1	12	EX	EX	14
217C	EX	EX	EX	EX	PAINT	3	EX	7A	1, 2, 8	EX	EX	14B
217D	3'-0"	7'-0"	1-3/4"	SCWD	PAINT	1	1A	2	–	1	7	–
217E	3'-0"	7'-0"	1-3/4"	SCWD	PAINT	1	1A	2	–	1	7	–
217F	3'-0"	7'-0"	1-3/4"	SCWD	PAINT	1	1A	1	–	1	7	–
218	3'-0"	7'-0"	1-3/4"	WD/MTL	STAIN	1	1A	3	–	1	7	–
219	EX	EX	EX	EX	PAINT	1	EX	5D	1, 2, 8	EX	EX	–
219B	EX	EX	EX	EX	PAINT	1	EX	1C	1, 2, 8	EX	EX	14
219C	EX	EX	EX	EX	PAINT	3	EX	7A	1, 2, 8	EX	EX	14B
219D	EX	EX	EX	EX	PAINT	1	EX	1C	1, 2, 8	EX	EX	–
219E	EX	EX	EX	EX	PAINT	1	EX	2C	1, 2, 8	EX	EX	–
219F	EX	EX	EX	EX	PAINT	1	EX	1C	1, 2, 8	EX	EX	–
219G	3'-0"	7'-0"	1-3/4"	SCWD	PAINT	1	1A	1	–	1	7	–
220	3'-0"	7'-0"	1-3/4"	WD/MTL	STAIN	1	1A	8	–	1	7	15
220A	3'-0"	7'-0"	1-3/4"	WD/MTL	STAIN	3	1A	8	–	1	7	–
220B	–	–	–	–	–	–	3	–	–	5	11	–
221	–	–	–	–	–	–	–	–	NIC	–	–	–
222	3'-6"	7'-0"	1-3/4"	WD/MTL	STAIN	1	1	5B	7, 12	EX	EX	–
223	3'-6"	7'-0"	1-3/4"	WD/MTL	STAIN	1	1A	5B	7	2	8	–
223A	–	–	–	–	–	–	–	–	NIC	–	–	–
223B	–	–	–	–	–	–	–	–	NIC	–	–	–
224	–	–	–	–	–	–	–	–	NIC	–	–	–

DOOR NUMBER	DOOR SIZE W	DOOR SIZE H	DOOR SIZE THK.	MATR'L	FINISH	DOOR TYPE	FRAME TYPE	HARDWARE SET	REMARKS	HEAD DETAIL	JAMB DETAIL	THRESHOLD DETAIL
SECOND FLOOR CONTINUED												
224	–	–	–	–	–	–	–	–	NIC	–	–	–
225	–	–	–	–	–	–	–	–	NIC	–	–	–
226	–	–	–	–	–	–	–	–	NIC	–	–	–
227	–	–	–	–	–	–	–	–	NIC	–	–	–
228	6'-0"	7'-0"	1-3/4"	WD/MTL	STAIN	2	2A	11	–	1	7	–
228C	VFY	VFY	1-3/4"	SCWD	PAINT	1	EX	1	12	EX	EX	–
228D	3'-0"	7'-0"	1-3/4"	SCWD	PAINT	1	1A	2	–	1	7	–
228E	3'-0"	7'-0"	1-3/4"	SCWD	PAINT	1	1A	1	–	1	7	14
228F	3'-0"	7'-0"	1-3/4"	SCWD	PAINT	1	1A	1	–	1	7	14
228G	3'-0"	7'-0"	1-3/4"	SCWD	PAINT	1	1A	2	–	1	7	–
228H	3'-0"	7'-0"	1-3/4"	SCWD	PAINT	1	1A	2	–	1	7	–
228J	3'-0"	7'-0"	1-3/4"	SCWD	PAINT	1	1A	1	–	1	7	–
228K	3'-0"	7'-0"	1-3/4"	SCWD	PAINT	1	1A	2	–	1	7	–
228L	VFY	VFY	1-3/4"	WD/MTL	STAIN	1	EX	3.	7, 12, 13	EX	EX	–
228M	VFY	VFY	1-3/4"	WD/MTL	STAIN	1	EX	3.	7, 12, 13	EX	EX	–

THIRD FLOOR

DOOR NUMBER	DOOR SIZE W	DOOR SIZE H	DOOR SIZE THK.	MATR'L	FINISH	DOOR TYPE	FRAME TYPE	HARDWARE SET	REMARKS	JAMB DETAIL	HEAD DETAIL	THRESHOLD DETAIL
300B	EX.	EX.	EX.	EX.	PAINT	EX.	EX.	EX.	1, 2, 8, 12	EX	EX	–
300D	EX.	EX.	EX.	EX.	PAINT	EX.	EX.	EX.	1, 2, 8, 12	EX	EX	–
301	3'-0"	7'-0"	1-3/4"	WD/MTL	STAIN	1	1A	5A	7	2	8	13
301B	3'-0"	7'-0"	1-3/4"	SCWD	PAINT	1	1A	1	–	1	7	13
301C	4'-0"	7'-0"	1-3/4"	SCWD	PAINT	2	2A	10	–	1	7	–
301D	4'-0"	7'-0"	1-3/4"	SCWD	PAINT	2	2A	10	–	1	7	–
301E	3'-0"	7'-0"	1-3/4"	SCWD	PAINT	1	1A	1B	–	1	7	–
301F	4'-0"	7'-0"	1-3/4"	SCWD	PAINT	2	2A	10	–	1	7	–
301G	4'-0"	7'-0"	1-3/4"	SCWD	PAINT	2	2A	10	–	1	7	–
302	VFY	VFY	VFY	WD/MTL	STAIN	1	1A	5A	7	2A	8A	13
302B	3'-0"	7'-0"	1-3/4"	SCWD	PAINT	1	1A	2	–	1	7	–
302C	3'-0"	7'-0"	1-3/4"	SCWD	PAINT	1	1A	2	–	1	7	–
303	3'-0"	7'-0"	1-3/4"	WD/MTL	STAIN	1	1A	5A	7	1	7	13
303B	3'-0"	7'-0"	1-3/4"	SCWD	PAINT	1	1A	2	–	1	7	–
303D	3'-0"	7'-0"	1-3/4"	WD/MTL	STAIN	1	1A	5	7	2	8	–
304	3'-0"	7'-0"	1-3/4"	WD/MTL	STAIN	3	1A	8	7	1	7	15
304B	–	–	–	–	–	–	3	–	–	5	11	–
305	VFY	VFY	VFY	WD/MTL	STAIN	1	EX.	5F	7, 12	EX	EX	–
305A	3'-0"	7'-0"	1-3/4"	SCWD	PAINT	1	1A	1	–	1	7	–
305B	3'-0"	7'-0"	1-3/4"	SCWD	PAINT	1	EX	2A	7, 12	EX	EX	–
306	3'-0"	7'-0"	1-3/4"	WD/MTL	STAIN	1	1A	3	7	1	7	–
307	3'-0"	7'-0"	1-3/4"	WD/MTL	STAIN	1	1A	5	7	1	7	13
308	3'-0"	7'-0"	1-3/4"	WD/MTL	STAIN	1	1A	5A	7	2	8	13
309	VFY	VFY	VFY	WD/MTL	STAIN	1	EX.	5	7, 12, 13	EX	EX	–
310A	3'-0"	7'-0"	1-3/4"	WD/MTL	STAIN	1	1A	5	7	1	7	13
310B	EX.	EX.	EX.	EX.	PAINT	EX.	EX.	1C	1, 2, 8, 12	EX	EX	14
310C	3'-0"	7'-0"	1-3/4"	SCWD	PAINT	1	EX.	1	12	EX	EX	–
310D	EX.	EX.	EX.	EX.	PAINT	EX.	EX.	7A	1, 2, 8, 12	EX	EX	14B
311	VFY	VFY	VFY	WD/MTL	STAIN	1	EX.	5F	7, 12	EX	EX	13
311C	EX.	EX.	EX.	EX.	PAINT	EX.	EX.	2C	1, 2, 8, 12	EX	EX	–
311D	EX.	EX.	EX.	EX.	PAINT	EX.	EX.	7A	1, 2, 8, 12	EX	EX	13
311E	EX.	EX.	EX.	EX.	PAINT	EX.	EX.	3A	1, 2, 8, 12	EX	EX	–
312	3'-0"	7'-0"	1-3/4"	WD/MTL	STAIN	1	1A	5	7	1	7	14A
312A	3'-0"	7'-0"	1-3/4"	SCWD	PAINT	1	1A	1	–	1	7	14
314	VFY	VFY	VFY	WD/MTL	STAIN	1	EX.	5E	7, 12	EX	EX	–
314B	EX.	EX.	EX.	EX.	PAINT	EX.	EX.	2C	1, 2, 8, 12	EX	EX	13
314C	EX.	EX.	EX.	EX.	PAINT	EX.	EX.	7A	1, 2, 8, 12	EX	EX	13
314D	EX.	EX.	EX.	EX.	PAINT	EX.	EX.	5A	1, 2, 8	EX	EX	13
314E	3'-0"	7'-0"	1-3/4"	SCWD	PAINT	1	EX.	2A	12	EX	EX	–
314F	3'-0"	7'-0"	1-3/4"	SCWD	PAINT	1	1A	2	–	1	7	–
314G	EX.	EX.	EX.	EX.	PAINT	EX.	EX.	1C	1, 2, 8, 12	EX	EX	14
314H	EX.	EX.	EX.	EX.	PAINT	EX.	EX.	7A	1, 2, 8, 12	EX	EX	14B
314J	EX.	EX.	EX.	EX.	PAINT	EX.	EX.	5	1, 2, 8, 12	EX	EX	13
315	VFY	VFY	VFY	SCWD	PAINT	1	EX.	5	12	EX	EX	–
315B	EX.	EX.	EX.	EX.	PAINT	EX.	EX.	1C	1, 2, 8, 12	EX	EX	14
315C	EX.	EX.	EX.	EX.	PAINT	EX.	EX.	7A	1, 2, 8, 12	EX	EX	14B
316	VFY	VFY	VFY	WD/MTL	STAIN	1	EX.	5D	7, 12	EX	EX	13
316A	EX.	EX.	EX.	EX.	PAINT	EX.	EX.	2C	1, 2, 8, 12	EX	EX	–
316B	EX.	EX.	EX.	EX.	PAINT	EX.	EX.	2C	1, 2, 8, 12	EX	EX	–
317	3'-0"	7'-0"	1-3/4"	WD/MTL	STAIN	1	1A	5	7	1	7	13
317B	3'-0"	7'-0"	1-3/4"	SCWD	PAINT	1	1A	1A	–	2	8	–
318	3'-0"	7'-0"	1-3/4"	WD/MTL	STAIN	1	1A	5	7	1	7	13
320	3'-0"	7'-0"	1-3/4"	WD/MTL	STAIN	3	1A	8	7	1	7	15
320B	–	–	–	–	–	–	3	–	–	5	11	–
321	VFY	VFY	VFY	WD/MTL	STAIN	1	EX.	3	7, 12, 13	EX	EX	–
322A	VFY	VFY	VFY	WD/MTL	STAIN	1	EX.	5E	7	EX	EX	13
322B	EX.	EX.	EX.	EX.	STAIN	1	EX.	2B	1, 2, 8, 12	EX	EX	–
322C	3'-0"	7'-0"	1-3/4"	WD/MTL	STAIN	1	1A	5A	7	1	7	13
322D	3'-0"	7'-0"	1-3/4"	SCWD	PAINT	1	1A	1	–	1	7	–
323	VFY	VFY	VFY	WD/MTL	STAIN	1	EX.	3	7, 12, 13	EX	EX	–
324	VFY	VFY	VFY	WD/MTL	STAIN	1	EX.	3C		EX	EX	–
325	VFY	VFY	VFY	WD/MTL	STAIN	1	EX.	6		EX	EX	13
326	VFY	VFY	VFY	WD/MTL	STAIN	1	EX.	5C		EX	EX	13
326B	3'-0"	7'-0"	1-3/4"	SCWD	PAINT	1	1A	2	–	1	7	–
326C	EX.	EX.	EX.	EX.	PAINT	1	EX.	1A	1, 2, 8, 12	1	7	13
326D	EX.	EX.	EX.	EX.	PAINT	EX.	EX.	1	1, 2, 8, 12	EX	EX	14A
326E	EX.	EX.	EX.	EX.	PAINT	EX.	EX.	7	1, 2, 8, 12	EX	EX	14B
326F	3'-0"	7'-0"	1-3/4"	SCWD	PAINT	1	1A	2	–	1	7	–
326G	3'-0"	7'-0"	1-3/4"	SCWD	PAINT	1	1A	2	–	1	7	–
326H	EX.	EX.	EX.	EX.	PAINT	EX.	EX.	1	1, 2, 8, 12	EX	EX	14
326J	EX.	EX.	EX.	EX.	PAINT	EX.	EX.	7	1, 2, 8, 12	EX	EX	14B
327	VFY	VFY	VFY	WD/MTL	STAIN	1	EX.	5D	7, 12	EX	EX	13
327B	EX.	EX.	EX.	EX.	PAINT	EX.	EX.	1	1, 2, 8, 12	EX	EX	14
327C	EX.	EX.	EX.	EX.	PAINT	EX.	EX.	2	1, 2, 8, 12	EX	EX	–
327D	EX.	EX.	EX.	EX.	PAINT	EX.	EX.	1	1, 2, 8, 12	EX	EX	14
327E	EX.	EX.	EX.	EX.	PAINT	EX.	EX.	7	1, 2, 8, 12	EX	EX	14B
327F	EX.	EX.	EX.	EX.	PAINT	EX.	EX.	2	1, 2, 8, 12	EX	EX	13
327G	EX.	EX.	EX.	EX.	PAINT	EX.	EX.	1	1, 2, 8, 12	EX	EX	14
327H	EX.	EX.	EX.	EX.	PAINT	EX.	EX.	7	1, 2, 8, 12	EX	EX	14B
328	VFY	VFY	VFY	WD/MTL	STAIN	1	EX.	5E	7, 12	EX	EX	13
328B	EX.	EX.	EX.	EX.	PAINT	EX.	EX.	2	1, 2, 8, 12	EX	EX	13
330	VFY	VFY	VFY	WD/MTL	STAIN	1	EX.	3C	7, 12	EX	EX	13
330B	EX.	EX.	EX.	EX.	PAINT	EX.	EX.	2	1, 2, 8, 12	EX	EX	–
330C	VFY	VFY	VFY	SCWD	PAINT	3	EX.	7	–	EX	EX	13
330D	VFY	VFY	VFY	WD/MTL	STAIN	1	EX.	3C	7, 12	EX	EX	–

DOOR SCHEDULE REMARKS AND NOTES

DOOR SCHEDULE REMARKS

1. EXISTING HARDWARE, DOOR AND FRAME ASSEMBLY TO REMAIN UNO.
2. VERIFY FUNCTION OF EXISTING LOCKSET. PROVIDE NEW LOCKSET AS INDICATED BY THE HARDWARE SET IF EXISTING DOES NOT MATCH PROPOSED.
3. NOT USED
4. NOT USED
5. NOT USED
6. NOT USED
7. MATCH STAIN FINISH OF EXISTING BASE BUILDING DOORS – VFY.
8. REFINISH EXISTING DOOR AND FRAME – SEE FINISH PLAN FOR TYPICAL FINISHES.
9. FIX EXISTING DOOR IN PLACE.
10. INDICATED DOOR TO RECEIVE SECURITY LOCKSET AND CORD READER – THESE DEVICES TO BE FURNISHED & INSTALLED UNDER SEPARATE CONTRACT BETWEEN DC COURTS & ADT – PROVIDE CONDUIT, PULL STRING AND RING TO ABOVE CEILING ON STRIKE SIDE.
11. NO CLOSER
12. PATCH DOOR AND FRAME AND REFINISH.
13. PATCH AND REINFORCE EXIST. H.M. FRAME. REPLACE HINGE, STRIKE AND CLOSER REINFORCING PLATES WITH NEW. PATCH ALL HOLES AND GRIND SMOOTH AND PRIME FOR PAINTING.

DOOR SCHEDULE GENERAL NOTES

1. SEE FINISH HARDWARE SPECIFICATION SECTION 08710 FOR HARDWARE SCHEDULE.
2. NOTIFY ARCHITECT WHERE CONDITIONS VARY FROM THOSE INDICATED ON PLANS, SCHEDULES AND SPECIFICATIONS.
3. WHERE NEW DOOR IN EXISTING WOOD FRAME IS HANDED THE SAME AS ORIGINAL DOOR, REPLACE STOP AT HEAD WITH NEW, RE-USE EXISTING MORTISE POCKET AT HEAD FOR NEW CONCEALED CLOSER AND PATCH HEAD WITH WOOD AND FINISH TO MATCH EXISTING. WHERE NEW DOOR IN ORIGINAL WOOD FRAME IS HANDED DIFFERENTLY THAN ORIGINAL DOOR, REPLACE STOP AT HEAD, PATCH MORTISED POCKET AT ORIGINAL CLOSER WITH WOOD SPLICE FINISHED TO MATCH EXISTING, AND MORTISE NEW CONCEALED CLOSER IN EXISTING WOOD HEAD.
4. UNLESS NOTED OTHERWISE ALL CLOSERS AT NEW DOORS IN EXISTING WOOD FRAMES SHALL BE CONCEALED AND MORTISED INTO EXISTING HEAD.
5. UNLESS NOTED OTHERWISE ALL CLOSERS AT NEW AND EXISTING DOORS WITH NEW OR EXISTING METAL FRAMES SHALL BE SURFACE MOUNTED ON THE ROOM SIDE.
12. PATCH AND REPLACE DAMAGED WOOD DOOR FRAME AND CASING COMPONENTS WITH NEW WOOD OR SALVAGED PIECES IN VERY GOOD CONDITION FROM ORIGINAL FRAMES/CASINGS TO BE REMOVED ON THE JOB.

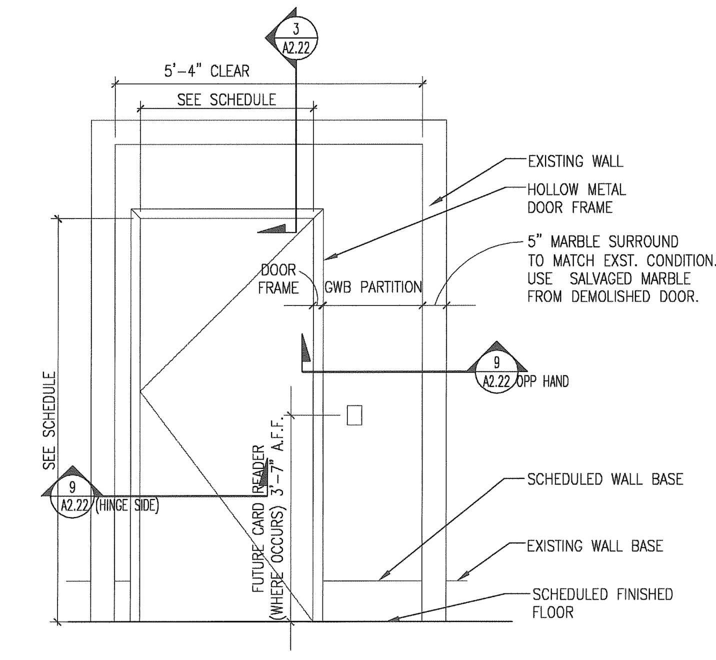

ELEVATION DETAIL AT NEW DOOR/ FRAME AND PARTION AT NEW OPENING IN CORRIDOR (CORRIDOR SIDE)
1 A2.21 SCALE: 1/2" = 1'-0"

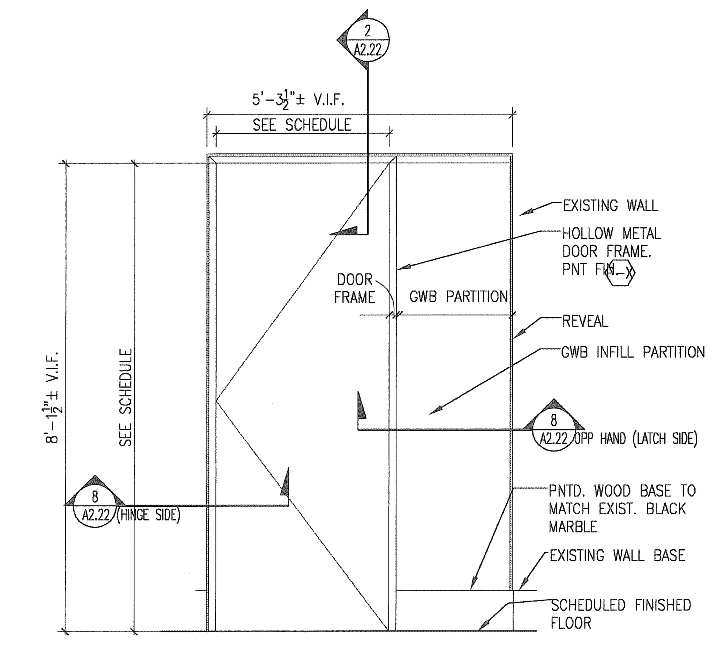

ELEVATION DETAIL AT NEW DOOR/ FRAME AND CORRIDOR INFILL PARTITION AT EXST OPENING IN CORRIDOR (CORRIDOR SIDE)
2 A2.21 SCALE: 1/2" = 1'-0"

Interior Improvements to DC Superior Courts Building 'B'
409 E Street, NW
Washington, DC 20001

GSA U.S. General Services Administration
301 7th Street, SW, Room 2021
Washington, DC 20407

LEO A DALY PLANNING ARCHITECTURE ENGINEERING INTERIORS EST. 1915
1201 Connecticut Ave, NW
Washington DC 20036 USA
Tel 202-861-4600 Fax 202-872-8530

Dalco INCORPORATED
10005 Old Columbia Road Suite L261
Columbia, MD 21046
Tel: 410-290-8827
Fax: 410-290-8812

Contractor
Address

KEY PLAN

ISSUES / REVISIONS

NO.	DESCRIPTION	DATE

FILE LOG

ACTIVITY	REFERENCE	BY
Manager		
Design		
Draw		
Draw		
Draw		
Check		

REGISTRATION

JOB No 52010300

CONSTRUCTION PACKAGE

ISSUED FOR CONSTRUCTION (FINAL) APRIL 8, 2003

DOOR SCHEDULE

A2.21

© Leo A Daly Company 2003

STANDARD DOOR TYPES

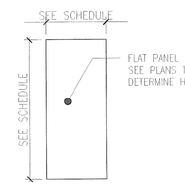

1 STANDARD SINGLE LEAF FLUSH DOOR

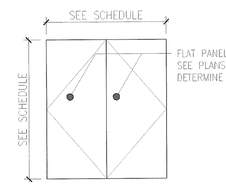

2 STANDARD DOUBLE LEAF FLUSH DOOR

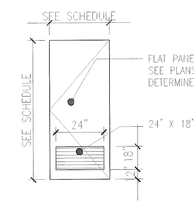

3 STANDARD SINGLE LEAF FLUSH DOOR W/ LOUVER

STANDARD FRAME TYPES

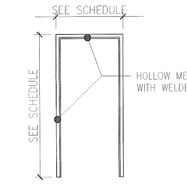

1 STANDARD HOLLOW METAL DOOR FRAME

1A SAME AS 1 BUT W/KNOCK-DOWN FRAME

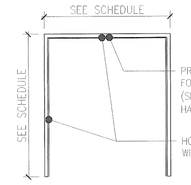

2 STANDARD DOUBLE LEAF HOLLOW METAL DOOR FRAME

2A SAME AS 2 BUT W/ KNOCK-DOWN FRAME

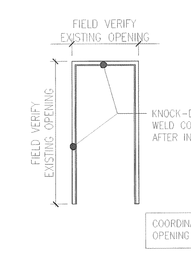

3 HOLLOW METAL ARCHWAY FRAME

LOUVER TYPES

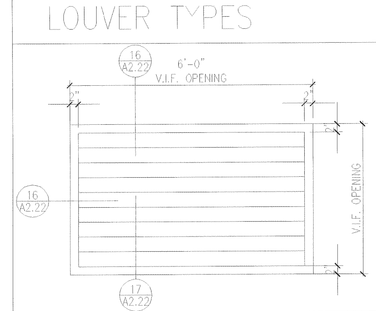

L1 SAME AS 1 BUT W/KNOCK-DOWN FRAME

STANDARD DOOR PLACEMENT

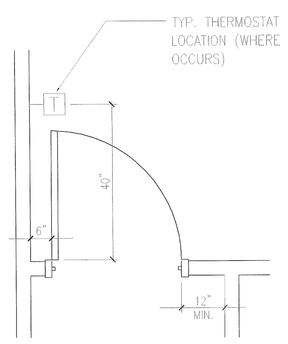

A TYPICAL DOOR PLACEMENT

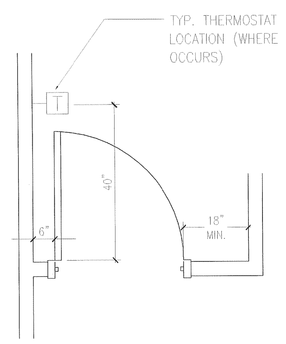

B TYPICAL DOOR PLACEMENT WITHIN ALCOVE

GENERAL DOOR & HARDWARE NOTES

1. SUPPLY ALL FRAMES, DOORS, & HARDWARE & INSTALL IN ACCORDANCE WITH MANUFACTURERS SPECIFICATIONS (SEE ALSO FINISH PLAN FOR FINISHES), & WITH THE AMERICANS WITH DISABILITIES ACCESSIBILITIES GUIDLINES (ADAAG). IN THE EVENT OF A CONFLICT, ADAAG SHALL GOVERN UNLESS OTHERWISE NOTED.
2. INSTALL ALL NEW HARDWARE IN EXISTING DOOR & NEW FRAMES IN ACCORDANCE WITH MANUFACTURERS SPECIFICATIONS, USING PROPER TEMPLATES & INSTRUCTIONS.
3. EXISTING CONDITION VARIES. ONLY EXISTING DOOR FRAMES SHALL BE ALTERED AS NOTED.
4. MAXIMUM UNDERCUT ON ALL DOORS SHALL BE 1/2" AFF UNLESS NOTED OTHERWISE.
5. ALL NEW WOOD DOORS SHALL BE SOLID CORE, PAINT GRADE FINISH, UNLESS NOTED OTHERWISE.
6. NOT USED.
7. PROVIDE & INSTALL COAT HOOKS ON OFFICE SIDE OF ALL OFFICE DOORS – FINISH TO MATCH DOOR HARDWARE.
8. SEE SPECIFICATIONS FOR HARDWARE SCHEDULE.

STANDARD HEAD DETAILS

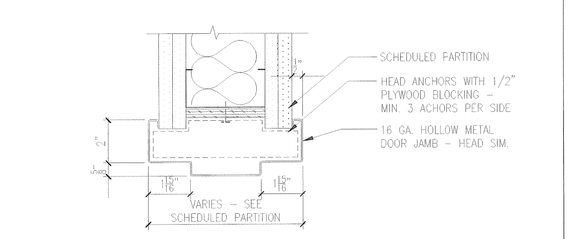

1 HEAD DETAIL
A2.22 SCALE: 3" = 1'-0"

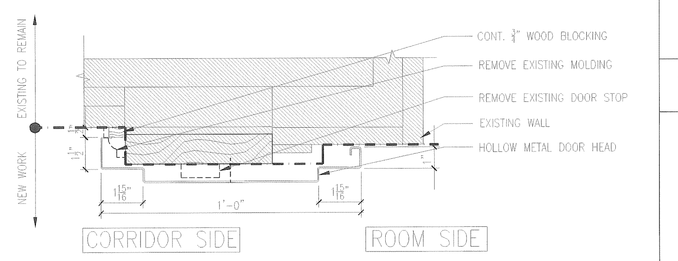

2 HEAD DETAIL
A2.22 SCALE: 3" = 1'-0"

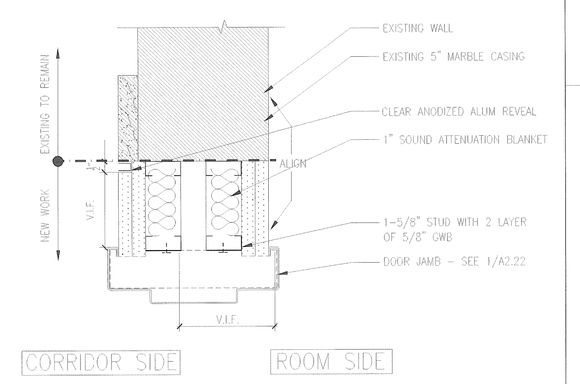

2A HEAD DETAIL
A2.22 SCALE: 3" = 1'-0"

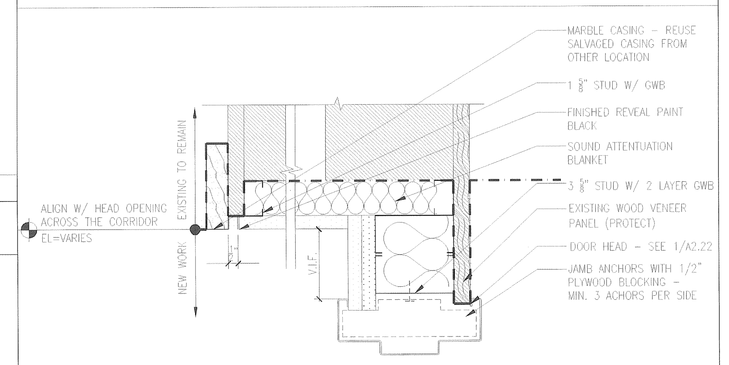

3 HEAD DETAIL
A2.22 SCALE: 3" = 1'-0"

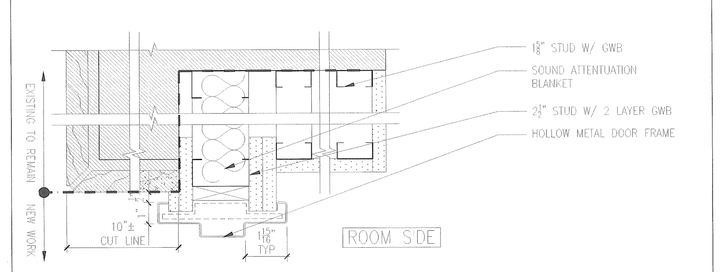

4 HEAD DETAIL
A2.22 SCALE: 3" = 1'-0"

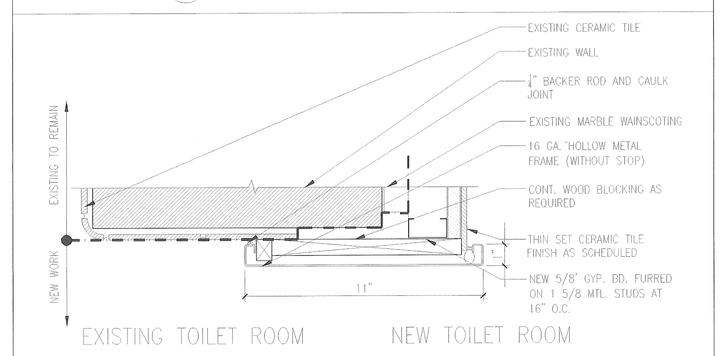

5 HEAD DETAIL
A2.22 SCALE: 3" = 1'-0"

STANDARD HEAD DETAILS

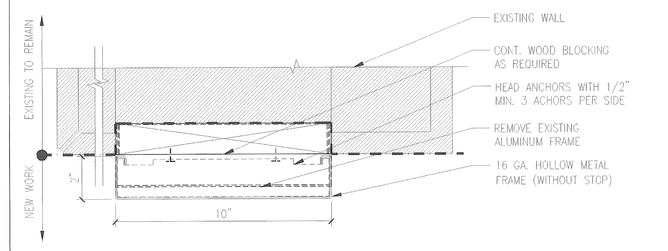

6 HEAD DETAIL
A2.22 SCALE: 3" = 1'-0"

STANDARD JAMB DETAILS

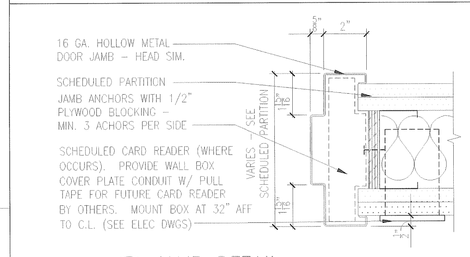

7 JAMB DETAIL
A2.22 SCALE: 3" = 1'-0"

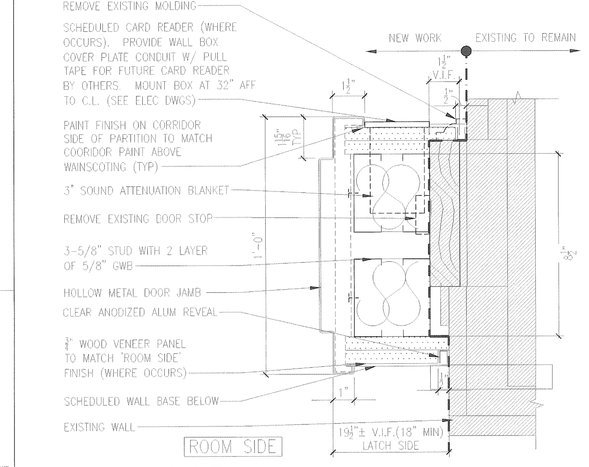

LATCH SIDE

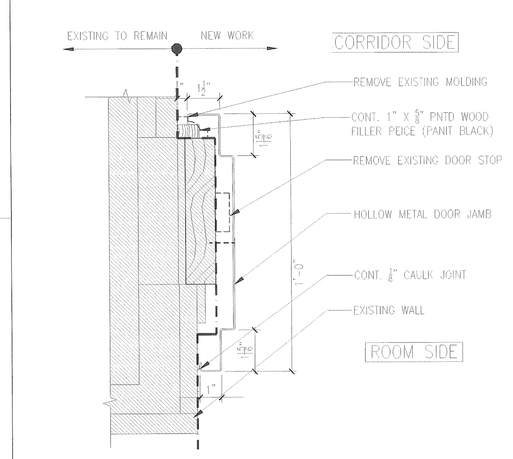

HINGE SIDE

8 JAMB DETAIL (LATCH AND HINGE SIDE)
A2.22 SCALE: 3" = 1'-0"

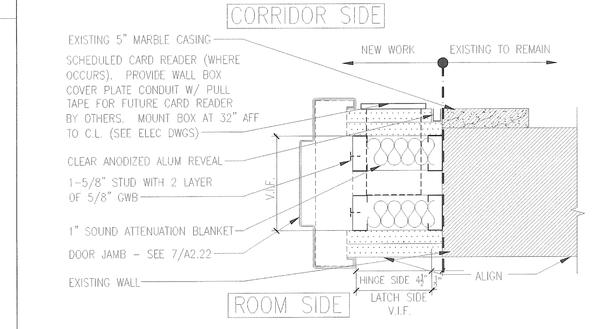

8A JAMB DETAIL
A2.22 SCALE: 3" = 1'-0"

STANDARD JAMB DETAILS

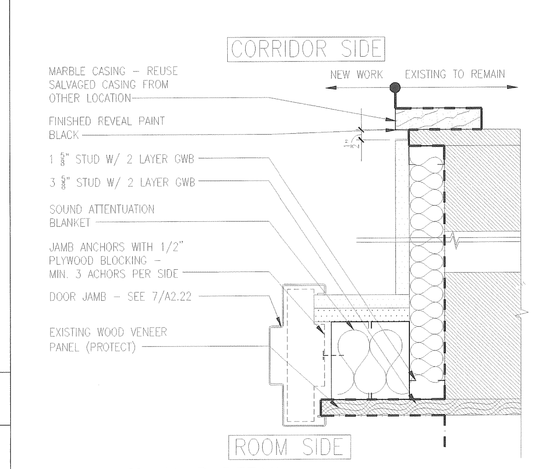

9 JAMB DETAIL
A2.22 SCALE: 3" = 1'-0"

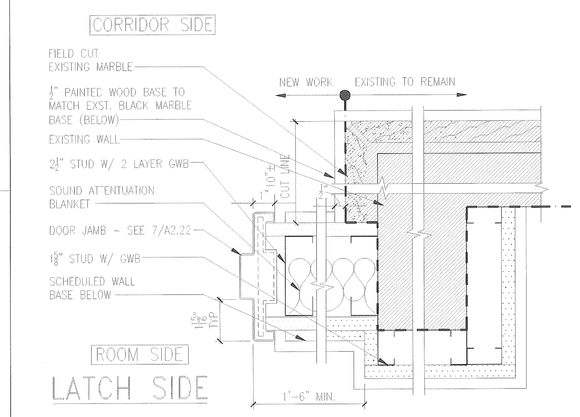

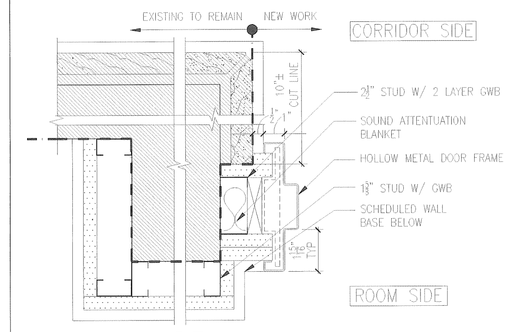

HINGE SIDE

10 JAMB DETAIL
A2.22 SCALE: 3" = 1'-0"

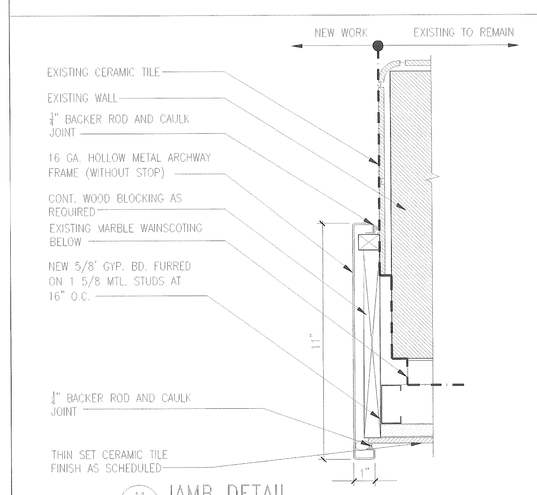

11 JAMB DETAIL
A2.22 SCALE: 3" = 1'-0"

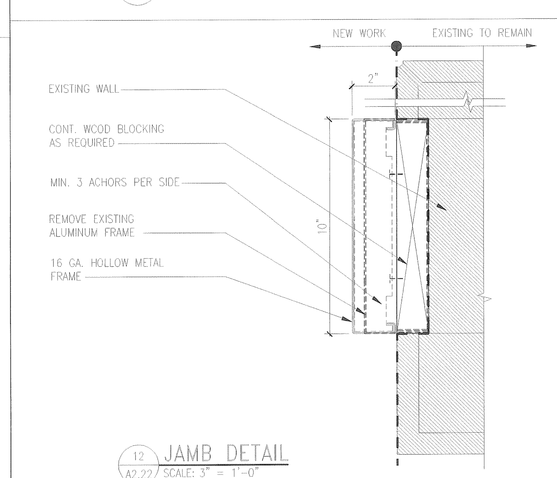

12 JAMB DETAIL
A2.22 SCALE: 3" = 1'-0"

STANDARD THRESHOLD DETAILS

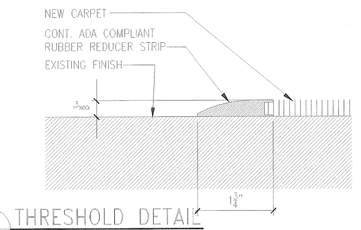

13 THRESHOLD DETAIL
A2.22 SCALE: 6" = 1'-0"

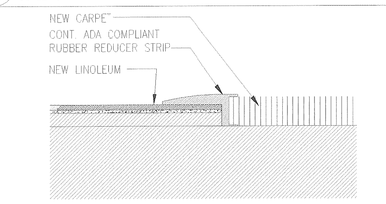

14 THRESHOLD DETAIL
A2.22 SCALE: 6" = 1'-0"

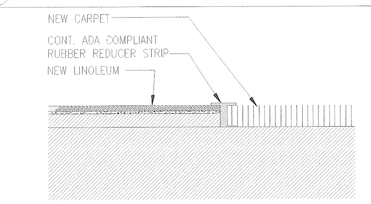

14A THRESHOLD DETAIL
A2.22 SCALE: 6" = 1'-0"

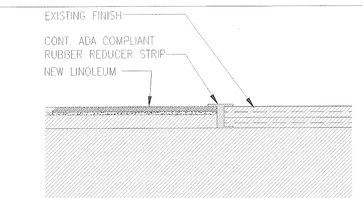

14B THRESHOLD DETAIL
A2.22 SCALE: 6" = 1'-0"

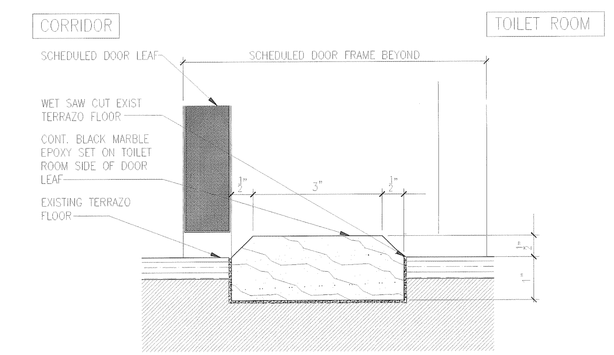

15 THRESHOLD DETAIL
A2.22 SCALE: 6" = 1'-0"

STANDARD LOUVER DETAILS

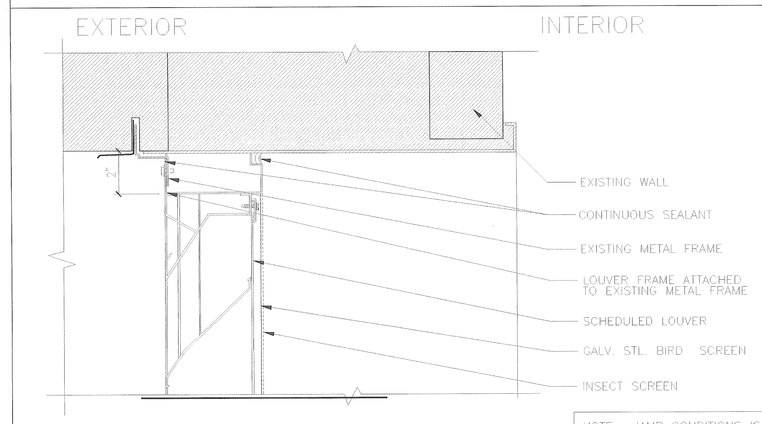

16 HEAD AND JAMB DETAIL
A2.22 SCALE: 3" = 1'-0"

NOTE: JAMB CONDITIONS IS SIMILAR SECTION DETAIL AT LOUVER HEAD

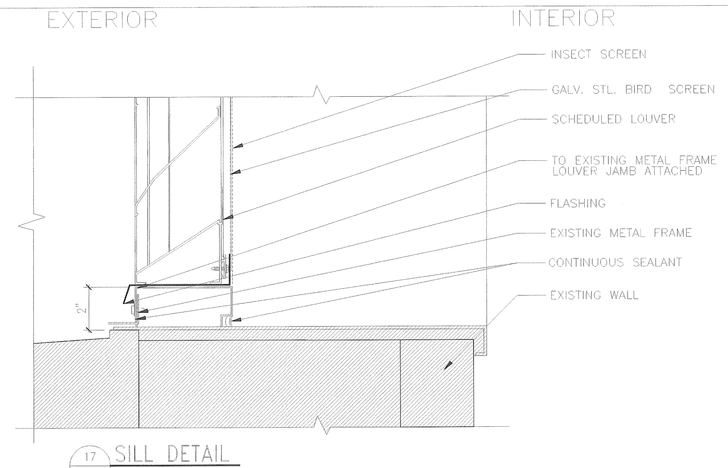

17 SILL DETAIL
A2.22 SCALE: 3" = 1'-0"

Interior Improvements to DC Superior Courts Building 'B'

409 E Street, NW
Washington, DC 20001

U.S. General Services Administration
301 7th Street, SW, Room 2021
Washington, DC 20407

LEO A DALY
PLANNING ARCHITECTURE ENGINEERING INTERIORS
EST. 1915

1201 Connecticut Ave, NW
Washington DC 20036 USA
Tel 202-861-4600 Fax 202-872-8530

Dalco
10005 Old Columbia Road Suite L261
Columbia, MD 21046
Tel: 410-290-8827
Fax: 410-290-8812

Contractor
Address

KEY PLAN

ISSUES / REVISIONS

NO.	DESCRIPTION	DATE

FILE LOG

ACTIVITY	REFERENCE	BY
Manager		
Design		
Draw		
Draw		
Draw		
Check		

REGISTRATION

JOB No 52010300

CONSTRUCTION PACKAGE

ISSUED FOR CONSTRUCTION (FINAL) APRIL 8, 2003

DOOR DETAILS

A2.22

© Leo A Daly Company 2003

FINISH SCHEDULE

	ROOM LOCATION		FLOOR		BASE				WALLS				CEILING	SOFFIT	REMARKS
	ROOM NO.	ROOM NAME	MATERIAL	FINISH	NORTH FINISH	SOUTH FINISH	EAST FINISH	WEST FINISH	NORTH FINISH	SOUTH FINISH	EAST FINISH	WEST FINISH	FINISH	FINISH	
	STAIR A	STAIR A	X-TERRAZZO	ETR	ETR	ETR	ETR	ETR	P-1	P-1	P-1	P-1	P-1	P-1	4
	STAIR B	STAIR B	X-TERRAZZO	ETR	ETR	ETR	ETR	ETR	P-1	P-1	P-1	P-1	P-1	P-1	4
	STAIR C	STAIR C	X-TERRAZZO	ETR	ETR	ETR	ETR	ETR	P-1	P-1	P-1	P-1	P-1	P-1	4
FIRST FLOOR	100	GUARD DESK	X-TERRAZZO	XFF	XBF	XBF	XBF	XBF	XWF	XWF	XWF	XWF	XCF	–	3
	100A	CORRIDOR	X-TERRAZZO	XFF	XBF	N/A	XBF	XBF	XWF	N/A	XWF	XWF	XCF	–	3
	100B	CORRIDOR	X-TERRAZZO	XFF	N/A	XBF	XBF/B5	XBF/B5	N/A	XWF/P8	XWF/P8	XWF/P8	XCF	–	3
	100C	VENDING AREA	X-TERRAZZO	XFF	XBF–B5	XBF	XBF	XBF	XWF/P8	XWF	XWF	XWF	ACT-1	–	7
	100D	VESTIBULE	–	–	–	–	–	–	–	–	–	–	–	–	7
	100E	VESTIBULE	–	–	–	–	–	–	–	–	–	–	XCF	–	7
	100F	VESTIBULE	–	–	–	–	–	–	–	–	–	–	XCF	–	7
	100G	VESTIBULE	–	–	–	–	–	–	–	–	–	–	–	–	
	102	CONFERENCE		C1	B1	B1	B1	B1	P10	P10	P10	P10	ACT-1	–	
	104	CONFERENCE	X-TERRAZZO	C2	B2	B2	B2	B2	P1	P1	P1	P1	ACT-1	–	
	106	CORRIDOR	X-TERRAZZO	XFF	XBF	B5	N/A	B5	XWF/P8	P8	N/A	P8	ACT-1	–	
	106A	WOMEN'S TOILET	X-TERRAZZO	XFF	B5	B5	B5	B-5	CT-1/P1	CT-1/P1	CT-1/P1	CT-1/P1	P1	–	
	106B	WOMEN'S TOILET	X-TERRAZZO	XFF	XBF	XBF	XBF	XBF	XWF/P1	XWF/P1	XWF/P1	XWF/P1	XCF/P1	–	
	109A	COURT RM.	X-CONC	C2	N/A	XBF/B5	XBF	XBF	N/A	XWF	XWF	XWF	ACT-2/ACT-3	P-1	5
	109B	BENCH AREA	X-CONC	C1	XBF/B5	N/A	XBF	XBF	XWF	N/A	XWF	XWF	ACT-2/ACT-3	P1	
	109C	CORRIDOR	X-CONC	C1	B1	B1	B1	B1	P1	P1	P1	P1	ACT-1	–	
	109D	L.A.N. RM.		XFF	XBF	XBF	XBF	XBF	XWF	XWF	XWF	XWF	ACT-1	–	7
	109E	L.A.N. CLOS.	X-CONC		–	–	–	–	–	–	–	–	–	–	7
	109F	ROBING		C1	B1	B1	B1	B1	P1	P1	P1	P1	ACT-1	P1	
	109G	JUDGE'S TOILET		XFF	XBF	XBF	XBF	XBF	XWF/P1	XWF/P1	XWF/P1	XWF/P1	P1	–	
	110A	QUEING AREA	X-CONC	C2/C3/C4	B3	B3	B3	B3	P10	P10	P10	P10/P9	ACT-1	–	
	110B	OPEN OFFICE	X-CONC	C2	N/A	B2	B2	B2	N/A	P1	P1	P3	ACT-1	P1	
	110C	STORAGE		L1	B4	B4	B4	B4	P1	P1	P1	P1	P1	–	
	110D	OPEN OFFICE	X-CONC	C2	B2	B2	B2	B2	P1	N/A	P1	P3	ACT-1	P1	
	110E	TOILET	–	XFF	XBF	XBF	XBF	XBF	XWF/P1	XWF/P1	XWF/P1	XWF/P1	P1	–	
	110F	BREAK		L1	B4	B4	B4	B4	P1	P1	P1	P1	ACT-1	P1	
	110G	OFFICE	X-CONC	C1	B1	B1	B1	B1	P1	P1	P1	P1	ACT-1	–	
	110H	OFFICE	X-CONC	C1	B1	B1	B1	B1	P1	P1	P1	P1	ACT-1	–	
	110K	COPY ROOM	X-CONC	L1	B4	B4	B4	B4	P1	P1	P1	P1	ACT-1	–	
	110J	FILING		L1	B4	B4	B4	B4	P1	P1	P1	P1	ACT-1	P1	
	111	JUDGEMENT		C1	B1	B1	B1	B1	P1	P1	P1	P1	ACT-1	–	
	112A	FILE REVIEW		C2	B2	B2	B2	B2	P-1	P-1	P-2	P-2	ACT-1	–	
	113A	MEDIATION	X-CONC	C2	B2	B2	B2	B2	P1	P9	P1	P1	ACT-1	–	
	113B	CONFERENCE	X-CONC	C2	B2	B2	B2	B2	P1	P1	P3	P1	ACT-1	P1	
	113C	CONFERENCE	X-CONC	C2	B2	B2	B2	B2	P1	P1	P1	P3	ACT-1	P1	
	113D	CONFERENCE	X-CONC	C2	B2	B2	B2	B2	P1	P1	P1	P3	ACT-1	P1	
	113E	FILES		L1	B4	B4	B4	B4	P1	P1	P1	P1	ACT-1	–	
	113F	CONFERENCE	X-CONC	C1	B1	B1	B1	B1	P1	P3	P1	P1	ACT-1	–	
	113G	CONFERENCE	X-CONC	C1	B1	B1	B1	B1	P1	P1	P1	P1	ACT-1	P1	
	113H	CONFERENCE	X-CONC	C2	B2	B2	B2	B2	P1	P1	P1	P3	ACT-1	–	
	115	TELLERS	X-TERRAZZO	XFF	XBF	XBF/B5	B5	N/A	XWF	XWF/P8	P8	N/A	ACT-1	–	
	115A	WAITING	X-TERRAZZO	XFF	XWF/B4	XBF	XBF	XBF	XWF/P8	XWF	XWF	XWF	ACT-1	–	
	115B	TELLERS	X-TERRAZZO	XFF	XBF	XBF/B5	XBF	B5	XWF	XWF/P8	XWF	P8	ACT-1	–	
	116	COURT SECURITY	X-TERRAZZO	C2	B2	B2	B2	B2	P1	P1	P1	P1	ACT-1	–	
	117	OPEN OFFICE		C2	B2	B2	B2	B2	P1	P1	P1	P1	ACT-1	P1	
	118	CORRIDOR	X-TERRAZZO	XFF	B5	XBF	N/A	B5	P8	XWF	N/A	P8	ACT-1	–	
	118A	MEN'S TOILET	X-TERRAZZO	XFF	B5	B5	B5	B5	CT-1/P1	CT-1/P1	CT-1/P1	CT-1/P1	P1	–	
	118B	MEN'S TOILET	X-TERRAZZO	XFF	XBF	XBF	XBF	XBF	XWF/P1	XWF/P1	XWF/P1	XWF/P1	XCF/P1	–	
	119A	COURT ROOM	X-CONC	C-2	XBF/B5	N/A	XBF	XBF	XWF/P1	N/A	XWF	XWF	ACT-2/ACT-3	P1	
	119B	BENCH AREA		C-1	N/A	XBF	XBF	XBF	N/A	XWF	XWF	XWF	ACT-2/ACT-3	P1	
	119D	TOILET		XFF	XBF	XBF	XBF	XBF	XWF/P1	XWF/P1	XWF/P1	XWF/P1	XCF/P1	–	
	119E	ROBING	X-CONC	C1	B1	B1	B1	B1	P1	P1	P1	P1	ACT-1	XCF/P1	
	120A	QUEING AREA	X-CONC	C2/C3/C4	B3	B3	B3	B3	P10	P10	P10	P9/P10	ACT-1	–	
	120B	OPEN OFFICE	X-CONC	C2	B2	B2	B2	B2	P1	P1	P1	P1/P3	ACT-1	P1	
	120D	TOILET	X-TERRAZZO	XFF	XBF	XBF	XBF	XBF	XWF/P1	XWF/P1	XWF/P1	XWF/P1	XCF/P1	–	
	120E	OFFICE	X-CONC	C1	B1	B1	B1	B1	P1	P1	P1	P1	ACT-1	P1	
	120F	OFFICE	X-CONC	C1	B1	B1	B1	B1	P1	P1	P1	P1	ACT-1	P1	
	120G	COPY ROOM	X-CONC	C2	B2	B2	B2	B2	P1	P1	P1	P1	ACT-1	–	
	121	CORRIDOR	X-CONC	L1	B4	B4	B4	B4	P1	P1	P1	P1	ACT-1	–	
	121A	TELEPHONE	X-CONC	XFF	B5	XBF	XBF	XBF	P1	P1	P1	P1	ACT-1	–	
	121B	ELECTRICAL	X-CONC	XFF	B5	XBF	B5	XBF	P1	P1	P1	P1	ACT-1	–	
	121C	CORRIDOR	X-CONC	C1	B1	B1	B1	B1	P1	P1	P1	P1	ACT-1	–	
	122A	FILE ROOM	X-CONC	C2	B2	B2	B2	B2	P1	P1	P2	P2	ACT-1	–	
	123A	MEDIATION	X-CONC	C2	B2	B2	B2	B2	P9	P1	P1	P1	ACT-1	XCF/P1	
	123B	FILES	X-CONC	C2	B2	B2	B2	B2	P1	P1	P1	P1	ACT-1	–	
	123C	CONFERENCE	X-CONC	C2	B2	B2	B2	B2	P1	P1	P3	P1	ACT-1	–	
	123D	CONFERENCE	X-CONC	C2	B2	B2	B2	B2	P3	P1	P1	P1	ACT-1	XCF/P1	
	123E	PANTRY	X-CONC	L1	B4	B4	B4	B4	P3	P1	P1	P1	ACT-1	XCF/P1	
	123F	CONFERENCE	X-CONC	C2	B2	B2	B2	B2	P1	P1	P3	P1	ACT-1	–	
	123G	CONFERENCE	X-CONC	C2	B2	B2	B2	B2	P1	P1	P3	P1	ACT-1	–	
	124A	FILE AREA	X-CONC	C2	B2	B2	B2	B2	P1	P1	P1	P1	ACT-1	P1	

	ROOM LOCATION		FLOOR		BASE				WALLS				CEILING	SOFFIT	REMARKS
	ROOM NO.	ROOM NAME	MATERIAL	FINISH	NORTH FINISH	SOUTH FINISH	EAST FINISH	WEST FINISH	NORTH FINISH	SOUTH FINISH	EAST FINISH	WEST FINISH	FINISH	FINISH	
SECOND FLOOR	200	ELEVATOR LOBBY	X-TERRAZZO	XFF	XBF	XBF	XBF/B5	XBF/B5	XWF/P8	XWF/P8	XWF/P8	XWF/P8	ACT-3	P1	
	200A	STORAGE		XFF	XBF	XBF	XBF	XBF	XWF	XWF	XWF	XWF	P1	–	
	200B	CORRIDOR	X-TERRAZZO	XFF	XBF	B5	XBF	XBF	P9	P9	P9	P9	ACT-3	P1	
	200C	CORRIDOR	X-TERRAZZO	XFF	N/A	XBF	XBF/B5	XBF/B5	N/A	XWF/P1	XWF/P1	XWF/P8/P1	ACT-3	P1	
	200D	CORRIDOR	X-TERRAZZO	XFF	XBF	B5	XBF	XBF	P9	P1	P9	P9	ACT-3	P1	
	200E	CORRIDOR	X-TERRAZZO	XFF	B5	XBF	XBF	XBF	P9	P9	P9	P9	ACT-3	P1	
	200F	CORRIDOR	X-TERRAZZO	XFF	XBF	N/A	XBF	XBF	XWF/P1	N/A	XWF/P1	XWF/P1/P8	ACT-3	P1	
	201A	CONFERENCE		C2	XBF/B2	B2	XBF	XBF/B2	XWF/P10	P10	XWF	XWF/P10	ACT-1	P1	
	202	CONFERENCE		C1	XBF	XBF	XBF	XBF	P10	P10	P10	P10	ACT-1	XCF/P1	
	204A	WOMEN'S TOILET	X-TERRAZZO	XFF	B5	B5	B5	B5	CT-1/P1	CT-1/P1	CT-1/P1	CT-1/P1	P1	–	
	204B	WOMEN'S TOILET	X-TERRAZZO	XFF	XBF	XBF	XBF	XBF	XWF/P1	XWF/P1	XWF/P1	XWF/P1	XCF/P1	–	
	205A	RECEPTION		C2	B2	B2	XBF	B2	P1	P1	P1	P1	ACT-1	–	
	205B	CONFERENCE		C2	B2	B2	B2	B2	P1	P1	P1	P1	ACT-1	–	
	205C	OPEN OFFICES		C2	XBF/B5	XBF/B5	XBF/B2	XBF/B5	P1	P1	P1	P1	ACT-1	XCF/P1	
	206	CONFERENCE	X-TERRAZZO	XFF	B5	B5	B5	B5	P1	P1	P1	P1	ACT-1	–	
	214A	WAITING AREA		C1	XBF	XBF	XBF	XBF	P1	P1	P1	P1	ACT-1	P1	
	214B	OPEN OFFICES		C1	XBF	XBF	XBF	XBF	XWF	XWF	XWF	XWF	ACT-1	XCF/P1	–
	214C	TOILET		XFF	XBF	XBF	XBF	XBF	XWF/P1	XWF/P1	XWF/P1	XWF/P1	XCF/P1	–	
	214D	OFFICE		C1	XBF	XBF	XBF	XBF	P1	P1	P1	P1	ACT-1	XCF/P1	
	214E	FILES		L1	XBF	XBF	XBF	XBF	P1	P1	P1	P1	ACT-1	–	
	214F	TOILET		XFF	XBF	XBF	XBF	XBF	XWF/P1	XWF/P1	XWF/P1	XWF/P1	XCF/P1	–	
	214G	FILES		XFF	XBF	XBF	XBF	XBF	XWF/P1	XWF/P1	XWF/P1	XWF/P1	ACT-1	–	
	214H	FILES		L1	XBF	XBF	XBF	XBF	P1	P1	P1	P1	ACT-1	–	
	214J	TOILET		XFF	XBF	XBF	XBF	XBF	XWF/P1	XWF/P1	XWF/P1	XWF/P1	XCF/P1	–	
	214K	STORAGE		XFF	XBF	XBF	XBF	XBF	P1	P1	P1	P1	ACT-1	–	
	215	VESTIBULE		C2	B2	B2	B2	B2	P1	P1	P1	P1	ACT-1	P1	
	215A	OFFICE		C1	XBF	XBF	XBF	XBF	P1	P1	P1	P1	ACT-1	XCF/P1	
	215B	ELECTRICAL	X-CONC	XFF	XBF	XBF	XBF	XBF	XWF	XWF	XWF	XWF	XCF	–	
	215C	TOILET		XFF	XBF	XBF	XBF	XBF	XWF/P1	XWF/P1	XWF/P1	XWF/P1	XCF/P1	–	

SEE SHEET A2.32 FOR CONTINUATION OF SCHEDULE
FOR SUPPLEMENTARY INFORMATION, SEE FINISH PLANS @ SHEET A1.11, A1.12 & A1.13
SEE SPECIFICATIONS, MILLWORK AND CASEWORK DETAILS FOR LAMINATE FINISHES.

FINISH KEY

SYMBOL	DESCRIPTION	MANUFACTURER	COLOR	REMARKS
XFF	VARIES * *	VARIES * *	VARIES * *	EXISTING FLOOR FINISH TO REMAIN
XBF	VARIES * *	VARIES * *	VARIES * *	EXISTING BASE FINISH TO REMAIN
XWF	VARIES * *	VARIES * *	VARIES * *	EXISTING WALL FINISH TO REMAIN: TOUCH UP PAINT AS REQUIRED
XCF	PAINT * *	VERIFY * *	COLOR NAME: MATCH EXISTING COLOR NO.: *	EXISTING CEILING FINISH TO REMAIN TOUCH UP PAINT AS REQUIRED
ACT-1	ACOUSTICAL CEILING TILE – (TYPICAL UNO)	ARMSTRONG *	STYLE: CORTEGA COLOR NAME: WHITE (WH) COLOR NO.: 739	24" x 24" x 3/4" SQUARE EDGED, FISSURED TILE, 15/16" EXPOSED TEE GRID – WHITE TYPICAL THROUGHOUT UNLESS NOTED OTHERWISE
ACT-2	ACOUSTICAL CEILING TILE – *	ARMSTRONG	STYLE: CIRRUS PROFILES COLOR NAME: WHITE (WH) COLOR NO.: 561	24" x 24" x 3/4" BEADED TEGULAR, 9/16" SUPRAFINE EXPOSED TEE GRID – WHITE BORDER TILE – FIRST FLOOR COURTROOMS
ACT-3	ACOUSTICAL CEILING TILE – *	ARMSTRONG	STYLE: CIRRUS PROFILES COLOR NAME: WHITE (WH) COLOR NO.: 562	24" x 24" x 3/4" BEADED SCORED TEGULAR, 9/16" SUPRAFINE EXPOSED TEE GRID – WHITE FILED TILE – FIRST FLOOR COURTROOMS
C-1	CARPET (TYPICAL UNO) *	LEES BROADLOOM CUT PILE	STYLE: ENDORSEMENT COLOR NAME: #502 – ORCHID COLOR NO.: LH-595	PROJECT STANDARD: CLIENT FURNISHED/GC INSTALLED INSTALL OVER TREADMORE #2580 CARPET PAD *
C-2	CARPET * *	LEES BROADLOOM LOOP PILE	STYLE: PEBBLEWEAVE II COLOR NAME: #106 – CANDLE LIGHT COLOR NO.: DF-506	INSTALL OVER TREADMORE #2580 CARPET PAD *
C-3	CARPET * *	LEES BROADLOOM CUT PILE	STYLE: TRANSITION COLOR NAME: #828– OBSIDIAN COLOR NO.: LH – 585	INSTALL OVER TREADMORE #2580 CARPET PAD *
C-4	CARPET * *	LEES BROADLOOM CUT PILE	STYLE: TRANSITION COLOR NAME: #334– FIREWOOD COLOR NO.: LH – 585	INSTALL OVER TREADMORE #2580 CARPET PAD *
VCT-1	VINYL COMP. TILE (TYPICAL UNO)	ARMSTRONG *	COLOR NAME: IMPERIAL TEXTURE COLOR NO.: 51927 FIELD GRAY STANDARD EXCELON *	1/8" x 12" x 12" – INSTALL GRAIN IN ONE DIRECTION – DO NOT CHECKERBOARD – *
B-1	CARPET BASE (TYPICAL AT CARPET FLOORING UNO)	LEES *	STYLE: ENDORSEMENT COLOR NAME: – COLOR NO.: LH-595	PROJECT STANDARD: CLIENT FURNISHED/ GC INSTALLED – BROADLOOM CUT PILE 4" H. / BOUND EDGE / SURFACE APPLIED
B-2	CARPET BASE *	LEES BROADLOOM LOOP PILE	STYLE: PEBBLEWEAVE II COLOR NAME: #106 – CANDLE LIGHT STYLE NO.: DF-506	4" H. / BOUND EDGE / SURFACE APPLIED *
B-3	CARPET *	LEES BROADLOOM CUT PILE	STYLE: TRANSITION COLOR NAME: #828– OBSIDIAN STYLE NO.: LH – 585	4" H. / BOUND EDGE / SURFACE APPLIED *
B-4	VINYL BASE (TYPICAL AT VCT FLOORING UNO)	AZROCK *	COLOR NAME: N/A COLOR NO.: CB-66	PROJECT STANDARD: STRAIGHT BASE @ CARPET; COVE BASE @ HARD SURFACES TYPICAL UNO
B-5	BASE TO MATCH ADJACENT EXISTING BASE	* *	COLOR NAME: COLOR NO.:	* *
B-6	FINISHED WOOD BASE PAINTED BLACK	BENJAMIN MOORE *	COLOR NAME: SATIN IMPERVO ENAMEL COLOR NO.: C235 BLACK *	MATCH EXIST. BLACK MARBLE BASE *
P-1	PAINT (TYPICAL UNO) *	DURON * *	COLOR NAME: SOLO WHITE COLOR NO.: #CW051W *	PROJECT STANDARD COLOR, UNO – ULTRA DELUX INTERIOR ACRYLIC LATEX LOW SHEEN ENAMEL ON GYP. BD. ALKYD LOW SHEEN ENAMEL ON WOODS & METALS
P-2	PAINT * *	BENJAMIN MOORE *	COLOR NAME: ROCKPORT GREY COLOR NO.: HC-105	ACCENT COLOR, INTERIOR DOORS & FRAMES AS NOTED INTERIOR ACRYLIC LATEX LOW SHEEN ENAMEL ON GYP. BD. ALKYD LOW SHEEN ENAMEL ON WOODS & METALS
P-3	PAINT * *	DURON * *	COLOR NAME: OLD BLUE SEA COLOR NO.: #B564M	ACCENT COLOR ULTRA DELUX INTERIOR ACRYLIC LATEX LOW SHEEN ENAMEL TYPICAL UNO
P-5	PAINT * *	DURON * *	COLOR NAME: WINTER SEA COLOR NO.: 8565D *	STAIRWELL RAILING, STRINGER & RISER LOW SHEEN ENAMEL SATIN GLASS FINISH
P-8	PAINT * *	DURON * *	COLOR NAME: TOUCHSTONE COLOR NO.: 8762W	CORRIDOR DOORS & FRAMES AS NOTED ALKYD LOW SHEEN LATEX ENAMEL ALKYD LOW SHEEN ENAMEL ON WOODS & METALS
P-9	PAINT ARCHITECTURAL COATING	POLOMYX * *	COLOR NAME: #PL-00761B COLOR NO.: *	* * *
P-10	PAINT ARCHITECTURAL COATING	CRAFTON * *	COLOR NAME: #94-31 COLOR NO.: * *	* * *
CS	CONCRETE SEALER	GENERIC * *	COLOR NAME: * COLOR NO.: * *	* * *
L-1	LINOLEUM * *	ARMSTRONG DLW *	COLOR NAME: SPRUCE GREEN COLOR NO.: 19530 *	* *
PL-1	PLASTIC LAMINATE	WILSON ART * *	COLOR NAME: FAIENCE COLOR NO.: 4617-60 *	SEE DATA SHEET FIRE RATED CLASS 1 *
CT-1	CERAMIC TILE	AMERICAN OCEAN	COLOR NAME: * COLOR NO.: *	4 1/4" X 4 1/4" TILE W/ ALL REQUIRED ACCESSORY TILES

GENERAL FINISH NOTES

THE FOLLOWING GENERAL NOTES APPLY TO THE FINISH PLANS:

1. THESE DRAWINGS SHOULD NOT BE SCALED AND ANY CRITICAL DIMENSIONS SHOULD BE FIELD VERIFIED. DRAWING DIMENSIONS GOVERN.

2. VERIFY ALL DIMENSIONS AND EXISTING CONDITIONS AT THE JOBSITE AND ADVISE THE ARCHITECT & GSA OF ANY DISCREPANCIES, ADDITIONS, DELETIONS AND/OR ALTERATIONS IN ANY OR ALL CONDITIONS BEFORE PROCEEDING WITH ANY PHASE OF THE WORK.

3. ALL FINISHES SHALL BE APPLIED IN CONFORMANCE WITH THE MANUFACTURER'S RECOMMENDATIONS AND INSTRUCTIONS. A COPY OF THE RECOMMENDATIONS AND INSTRUCTIONS SHALL BE SUBMITTED TO THE ARCHITECT & GSA PRIOR TO THE INSTALLATION OF MATERIALS.

4. REMOVE PEELING PAINT FROM SURFACES TO RECEIVE NEW FINISHES AT LOCATIONS THROUGHOUT THE AREA OF THE WORK. CLEAN AFFECTED AREAS AND SURFACES AND PREPARE TO RECEIVE NEW FINISHES IN ACCORDANCE WITH THE RECOMMENDATIONS OF THE MANUFACTURER INDICATED BY THE FINISH PLAN.

5. REPAIR DAMAGED PLASTER TO RECEIVE NEW FINISHES WITH PATCHING COMPOUND. CLEAN AND FILL DAMAGED AREA TO LEVEL WITH ADJACENT SURFACES IN ORDER TO PROVIDE A SUITABLE SUBSTRATE FOR NEW FINISHES TO BE INSTALLED – SEE FINISH PLAN.

6. PAINT ALL SWITCH, OUTLET AND OTHER DEVICE PLATES WHICH OCCUR ON PAINTED SURFACES TO MATCH THE COLOR OF THE SURFACE ON WHICH THEY OCCUR. SUBMIT SAMPLES TO THE ARCHITECT, GSA AND TO THE OWNER PRIOR TO PAINTING.

7. ALL SWITCH, OUTLET AND OTHER DEVICE PLATES AND ACCESS PANELS WHICH OCCUR ON SURFACES DESIGNATED TO RECEIVE A FINISH OTHER THAN PAINT SHALL BE OF A TYPE TO RECEIVE WALLCOVERING AND SHALL BE LAMINATED WITH THE SPECIFIC WALLCOVERING OR FINISH.

8. UNLESS OTHERWISE NOTED, ALL PAINT, PAINTING AND PRIMING FOR WALLCOVERINGS AND WALLPAPER ARE TO BE FURNISHED AND INSTALLED BY THE CONTRACTOR. ALL SURFACES TO RECEIVE WALLCOVERING SHALL RECEIVE A MINIMUM OF ONE COAT OF PRIMER/SEALER APPROPRIATE TO SUBSTRATE AND FINISH WALLCOVERING.

9. ALUMINUM WALLCOVERING STOPS (CORNER BEAD) SHALL BE USED AT ALL OUTSIDE CORNERSWHERE A TRANSITION OR CHANGE OCCURS IN EITHER WALLCOVERING MATERIAL OR COLOR. WHERE WALLCOVERING MATERIAL OR COLOR DOES NOT CHANGE AT OUTSIDE CORNERS, WALLCOVERING SHALL WRAP CONTINUOUSLY AROUND CORNERS.

10. ALL CHANGES IN FLOOR MATERIAL AND COLORS SHALL OCCUR AT THE CENTERLINE OF THRESHOLDS OF DOORWAYS UNLESS NOTED OTHERWISE.

11. ALL UNFINISHED MATERIALS, GRILLES, REGISTERS, ETC., SHALL BE PAINTED TO MATCH ADJACENT WALLS. MATERIALS WITH A NATURAL FINISH, SUCH AS ANODIZED ALUMINUM, SHALL BE LEFT IN THEIR NATURAL FINISH UNLESS OTHERWISE NOTED BY THE DRAWINGS AND SPECIFICATIONS.

12. PATCH WOOD WALLS AT FORMER LOCATION OF JUDGE'S DESK & JURY BOX. FINISH SHALL BE WOOD PANEL(S) TO MATCH ADJACENT WOOD FINISH.

13. SEE REFLECTED CEILING PLANS AND FINISH SCHEDULE FOR CEILING FINISHES.

14. CLEAN EXISTING FINISHES TO REMAIN IN ACCORDANCE WITH THE MANUFACTURERS RECOMMENDATIONS IN ORDER TO RESTORE OR APPROXIMATE "LIKE NEW" CONDITIONS AS CLOSELY AS POSSIBLE.

15. APPLY ONE PRIMER COAT AND TWO FINISH COATS ON SURFACES TO BE PAINTED.

16. PREPARE FLOOR FOR INSTALLATION OF CARPET IN ACCORDANCE WITH THE CARPET MANUFACTURER'S SPECIFICATIONS AND RECOMMENDATIONS. REMOVE ALL FOREIGN MATTER, GREASE, WAX, PAINT, OIL, ADHESIVES, DIRT, ETC. CRACKS, HOLES AND DEPRESSIONS SHOULD BE FILLED WITH A GOOD GRADE OF FLASHING COMPOUND OR LATEX PATCH MATERIAL. ANY PROTRUDING OBJECTS SHOULD BE CUT OFF AND GROUND SMOOTH TO LEVEL WITH THE FLOOR SURFACE.

17. INSPECT FLOOR CONSTRUCTION AND SURFACES TO RECEIVE CARPET AND PROMPTLY NOTIFY THE ARCHITECT & GSA OF ANY AND ALL DEFECTS IN THE SUBSTRATE WHICH AFFECT THE WORK SO THAT THEY MAY BE CORRECTED BEFORE THE START OF THE WORK. PROCEEDING WITH THIS WORK SHALL BE DEEMED AS ACCEPTANCE BY THE CONTRACTOR OF THE PERTINENT FLOOR AREAS AND HE SHALL BE HELD RESPONSIBLE THEREAFTER FOR THE INSTALLATION OF THE WORK.

18. INSTALL FLOORING MATERIALS WITHIN THE ALLOWABLE TEMPERATURE RANGE AS STATED BY THE MANUFACTURER'S INSTALLATION INSTRUCTIONS. ALL FLOORING MATERIAL SHALL BE DELIVERED TO THE SITE IN TIME TO ACCLIMATE TO CONDITIONS PRIOR TO INSTALLATION AS REQUIRED. A COPY OF THE INSTALLATION INSTRUCTIONS SHALL BE SUBMITTED TO THE ARCHITECT, GSA AND THE OWNER.

19. CUT AND FIT CARPET NEATLY INTO BREAKS AND RECESSES AGAINST BASES, PERMANENT CABINETS AND EQUIPMENT AS REQUIRED.

20. EXISTING WOODWORK WITHIN FUTURE COURTROOMS AND HEARING ROOMS EXHIBIT DAMAGE FROM LACK OF MAINTENANCE AND PHYSICAL ABUSE. THIS WOODWORK INCLUDES, BUT IS NOT LIMITED TO, WALL PANELING, WAINSCOTING, BULKHEADS, BASE MOLDING, COVE MOLDING AND DECORATIVE FLUTED TRIM. WHERE THE PLANS INDICATE THE EXISTING WOODWORK TO REMAIN VISIBLE IN THE SPACE WHERE IT OCCURS, PERFORM THE FOLLOWING:

A. PERFORM ALL WORK IN ACCORDANCE WITH STANDARDS AS SET FORTH BY THE ARCHITECTURAL WOODWORK INSTITUTE (AWI) – ARCHITECTURAL WOODWORK QUALITY STANDARDS.

B. VERIFY THE EXISTING FINISH AND SPECIES OF WOOD PRIOR TO COMMENCEMENT OF THE WORK.

C. COMPLETELY STRIP AND CLEAN THE EXISTING FINISH FROM THE ABOVE–MENTIONED WOODWORK IN THE AREA OF THE WORK IN A MANNER AND WITH PRODUCTS APPROPRIATE TO THE SPECIES.

D. WHERE GOUGING FROM GRAFFITI OR SIMILAR SMALL GOUGES ARE EVIDENT, SAND OR FILL WITH A PASTE–TYPE WOOD FILLER TO MATCH ADJACENT WOOD. FILL SMALL HOLES, LESS THAN 1/2" IN SIZE, OPEN JOINTS, SPLITS AND DEEP SCRATCHES, GOUGES AND IRREGULARITIES WITH NON–SHRINKING WOOD PUTTY FILLER.

E. WHERE LARGE HOLES OCCUR IN THE EXISTING WOODWORK, NEATLY CUT THE HOLE(S) BACK TO THE MINIMUM EXTENT NECESSARY SO AS TOPROVIDE A CLEAN AND REGULARLY SHAPED APERTURE INTO WHICH TO APPLY A PRECISELY MATCHING SIZED PATCH OF THE SAME SPECIES OF WOOD AS THE SURROUNDING SURFACES. PROVIDE BACKING FOR THE PATCH SO THAT IT WILL REMAIN FLUSH WITH THE SURROUNDING SURFACES WITH NO LIPPAGE.

F. WHERE EXISTING PANELS ARE DEEMED TO BE DAMAGED BEYOND REPAIR, NOTIFY THE DESIGNER, GSA & THE OWNER OF THE CONDITION FOR THEIR REVIEW PRIOR TO COMMENCING THE WORK. WHERE AGREED UPON BY THE DESIGNER AND THE OWNER, CAREFULLY REMOVE DAMAGED PANELS AND REPLACE WITH NEW PANELS TO MATCH TOGETHER WITH FASTENERS TO MATCH THE ORIGINAL INSTALLATION.

G. REFINISH THE WOOD IN A MANNER MATCHING THE ORIGINAL INSTALLATION.

21. ALL EXTERIOR WINDOWS SHALL BE PROVIDED WITH WINDOW BLINDS AS FOLLOWS:

A. IN GENERAL OFFICE SPACE: "CACO" SIGNATURE SERIES 1" CATALINA 8 GUAGE MINI BLINDS; COLOR – 113 WHITE CAP

B. IN COURTROOMS, HEARING ROOMS, JUDGE'S ROBING AND ANTE–ROOMS: "CACO" SIGNATURE SERIES DELTA WOODS 2" HORIZONTAL BLINDS WITH FABRIC TAPES; COLOR – 3705 WALNUT; TAPE COLOR – CHOCOLATE

22. PATCH WOOD VENEER WALLS TO MATCH NEW STAIN FINISH AT INFILL PANELS AND SCARS WHERE DEMOLITON OF REMOVAL HAS OCCURED. THESE CONDITIONS INCLUDE AREAS WHERE JURY BOXES AND JUDGE'S DESKS HAVE BEEN REMOVED, OR AREAS WHERE DOOR OPENINGS ARE BEING INFILLED WITH NEW PARTITIONS. REPLACE BASE TO MATCH EXISTING ADJACENT OR SCHEDULED BASE AS INDICATED IN FINISH SCHEDULE.

FINISH SCHEDULE ABBREVIATIONS:

ETR – EXISTING FINISH TO REMAIN
STN – STONE
X – EXISTING

FINISH SCHEDULE REMARKS:

1. PATCH EXISTING STONE BASE AT INTERIOR PERIMETER WALLS
2. INSTALL NEW BASE AT EXTERIOR PERIMETER WALL.
3. PATCH STONE AND PLASTER TO MATCH EXIST.
4. REPAIR EXISTING DAMAGED PLASTER
5. SEE REFLECTED CEILING PLANS FOR FINISH LOCATIONS.
6. SEE FINISH PLANS FOR LOCATION OF FINISHES.
7. NO FINISH WORK IN THIS ROOM.
8. REMOVE EXISTING CERAMIC TILE FINISHES AND PREP WALLS AND FLOORS FOR SCHEDULED FINISHES.

Interior Improvements to DC Superior Courts Building 'B'
409 E Street, NW
Washington, DC 20001

GSA U.S. General Services Administration
301 7th Street, SW, Room 2021
Washington, DC 20407

LEO A DALY PLANNING ARCHITECTURE ENGINEERING INTERIORS EST. 1915
1201 Connecticut Ave, NW
Washington DC 20036 USA
Tel 202-861-4600 Fax 202-872-8530

Dalco INCORPORATED
10005 Old Columbia Road Suite L261
Columbia, MD 21046
Tel: 410-290-8827
Fax: 410-290-8812

Contractor
Address

KEY PLAN

ISSUES / REVISIONS

NO.	DESCRIPTION	DATE

FILE LOG

ACTIVITY	REFERENCE	BY
Manager		
Design		
Draw		
Draw		
Draw		
Check		

REGISTRATION

JOB No 52010300
CONSTRUCTION PACKAGE
ISSUED FOR CONSTRUCTION (FINAL) APRIL 8, 2003

FINISH SCHEDULE (1ST & 2ND FLR)
FINISH KEY & NOTES

A2.31

© Leo A Daly Company 2003

FINISH SCHEDULE

SECOND FLOOR CONTINUED

ROOM LOCATION		FLOOR		BASE				WALLS				CEILING	SOFFIT	REMARKS
ROOM NO.	ROOM NAME	MATERIAL	FINISH	NORTH FINISH	SOUTH FINISH	EAST FINISH	WEST FINISH	NORTH FINISH	SOUTH FINISH	EAST FINISH	WEST FINISH	FINISH	FINISH	
215B	ELECTRICAL	X-CONC	XFT	XBF	XBF	XBF	XBF	XWF	XWF	XWF	XWF	XCF	–	
215C	TOILET		XFT	XBF	XBF	XBF	XBF	XWF/P1	XWF/P1	XWF/P1	XWF/P1	XCF/P1	–	
216	CONFERENCE		C1	XBF	XBF	XBF	XBF	P1	P1	P1	P1	ACT-1	XCF/P1	
217	OPEN OFFICE		C2	XBF/B2	B2	XBF/B2	XBF	P1	P1	P1	P1	ACT-1	XCF/P1	
217A	OPEN OFFICE		C2	XBF	XBF/B2	XBF	XBF	P1	P1	P1	P1	ACT-1	–	
217B	FILE		L1	XBF	B4	XBF	XBF	P1	P1	P1	P1	P1	–	
217C	TOILET	X-TERRAZZO	XFT	XBF	XBF/B5	XBF	XBF	XWF/P1	XWF/P1	XWF/P1	XWF/P1	XCF/P1	–	
217D	OFFICE		C1	B1	B1	XBF	B1	P1	P1	P1	P1	ACT-1	XCF/P1	
217E	OFFICE		C1	B1	XBF	XBF	B1	P1	P1	P1	P1	ACT-1	XCF/P1	
217F	FILES		C1	B1	XBF	B1	XBF	P1	P1	P1	P1	ACT-1	–	
218	STORAGE	X-TERRAZZO	XFT	B5	B5	B5	B5	P1	P1	P1	P1	ACT-1	–	
219A	RECEPTION		C1	XBF	XBF	XBF	XBF	P1	P1	P1	P1	ACT-1	–	
219B	LUNCH ROOM		L1	B4	B4	B4	B4	P1	P1	P1	P1	ACT-1	–	8
219C	TOILET	X-CARPET	XFT	XBF	XBF	XBF	XBF	XWF/P1	XWF/P1	XWF/P1	XWF/P1	XCF/P1	–	
219D	OPEN OFFICE		C2	XBF	XBF/B5	XBF	XBF	XWF	XWF	XWF	XWF	ACT-1	P1	
219E	OPEN OFFICE		C1	XBF	B1	XBF	B1	P1	P1	P1	P1	ACT-1	–	
219F	CONFERENCE		C2	B2	XBF	XBF	XBF	P1	P1	P1	P1	ACT-1	–	
219G	CONFERENCE		C2	B2	B2	XBF	XBF	P1	P1	P1	P1	ACT-1	–	
220A	MEN'S TOILET	X-TERRAZZO	XFT	B5	B5	B5	B5	CT-1/P1	CT-1/P1	CT-1/P1	CT-1/P1	P1	–	
220B	MEN'S TOILET	X-TERRAZZO	XFT	XBF	XBF	XBF	XBF	XWF/P1	XWF/P1	XWF/P1	XWF/P1	XCF/P1	–	
223	OPEN OFFICES		C2	XBF	XBF/B2	XBF	XBF/B2	XWF	XWF/P10	XWF	XWF/P10	ACT-1	P1	
228A	OPEN OFFICE		C2	XBF/ B2	B2	XBF/B2	B2	P9	P1	P1	P1	ACT-1	XCF/P1	
228B	WAITING AREA		C2	B2	N/A	XBF	XBF	P1	N/A	P9	P9	ACT-1	–	
228C	COPY ROOM		C2	XBF	XBF	XBF	XBF	P1	P1	P1	P1	ACT-1	–	
228D	CONFERENCE		C2	B2	B2	B2	B2	P1	P1	P2	P1	ACT-1	–	
228E	COFFEE		L1	B4	B4	B4	B4	P1	P1	P1	P1	ACT-1	–	
228F	FILES		L1	B4	B4	B4	B4	P1	P1	P1	P1	ACT-1	–	
228G	OFFICE		C1	B1	B1	B1	B1	P1	P1	P1	P1	ACT-1	–	
228H	CONFERENCE		C1	B1	B1	B1	B1	P2	P1	P1	P1	ACT-1	P1	
228J	WAITING AREA		C2	B2	B2	B2	XBF	P1	P1	P1	P1	ACT-1	–	
228K	OFFICE		C2	XBF	XBF/B2	B2	XBF	P1	P1	P1	P1	ACT-1	–	

FINISH SCHEDULE

THIRD FLOOR

ROOM LOCATION		FLOOR		BASE				WALLS				CEILING	SOFFIT	REMARKS
ROOM NO.	ROOM NAME	MATERIAL	FINISH	NORTH FINISH	SOUTH FINISH	EAST FINISH	WEST FINISH	NORTH FINISH	SOUTH FINISH	EAST FINISH	WEST FINISH	FINISH	FINISH	
300	RECEPTION	X-TERRAZZO	XFT	XBF	XBF	XBF/B5	–	XWF/PB	XWF/PB	XWF/PB	XWF	XCF	–	
300A	CORRIDOR	X-TERRAZZO	XFT	XBF	N/A	XBF/B5	XBF/B5	PB	N/A	XWF/PB	XWF/PB	XCF	–	
300B	CORRIDOR	X-TERRAZZO	XFT	N/A	XBF	XBF/B5	XBF/B5	N/A	XWF/PB	XWFPB	XWF/PB	ACT-1	P1	
300C	CORRIDOR	X-TERRAZZO	XFT	N/A	XBF	XBF/B5	XBF/B5	N/A	XWF/PB	XWF/PB/P1	XWF/PB	XCF	–	
300D	WAITING AREA	X-TERRAZZO	XFT	XBF	N/A	XBF	XBF	XWF/PB	N/A	PB	PB	ACT-1	P1	
300E	CORRIDOR	X-TERRAZZO	XFT	XBF	XBF	XBF	XBF	PB	PB	PB	PB	ACT-1	P1	
301A	OPEN OFFICES	X-CONC	C2	XBF/B2	XBF/B2	XBF	XBF/B2	P1/P9	P1/P9	P1	P1/P9	ACT-1	P1	
301B	CONFERENCE	X-CONC	C2	XBF	B2	B2	B2	P1	P1	P1	P1	ACT-1	–	
301C	STORAGE	X-CONC	C2	B2	B2	B2	B2	P1	P1	P1	P1	ACT-1	–	
301D	STORAGE	X-CONC	C2	XBF	B2	B2	B2	P1	P1/P9	P1/P9	P1	ACT-1	–	
301E	CONFERENCE	X-CONC	C2	B2	XBF	B2	B2	P1	P1	P1	P1	ACT-1	–	
301F	STORAGE	X-CONC	C2	B2	B2	B2	B2	P1	P1	P1	P1	ACT-1	–	
301G	STORAGE	X-CONC	C2	B2	XBF	B2	B2	P1	P1	P1	P1	ACT-1	–	
302A	WAITING AREA	X-TERRAZZO	C2	XBF	XBF	XBF	B2	P1	P1	P1	P1	ACT-1	–	
302B	OFFICE	X-TERRAZZO	C2	B2	XBF	B2	XBF	P1	P1	P1	P1	ACT-1	–	
302C	OFFICE	X-TERRAZZO	C2	XBF	B2	B2	XBF	P1	P1	P1	P1	ACT-1	–	
303A	OPEN OFFICES	X-TERRAZZO	C2	XBF	XBF	B2	B2	XWF	XWF	P1	P1	ACT-1	–	
303B	OFFICE	X-TERRAZZO	C1	XBF	XBF	XBF	B1	XWF	XWF	XWF	P1	ACT-1	–	
304A	WOMENS TOILET	X-TERRAZZO	XFT	B5	B5	B5	B5	CT-1/P1	CT-1/P1	CT-1/P1	CT-1/P1	P1	–	
304B	WOMENS TOILET	X-TERRAZZO	XFT	XBF	XBF	XBF	XBF	XWF/P1	XWF/P1	XWF/P1	XWF/P1	XCF/P1	–	
305A	OPEN OFFICES	X-CONC	C2	XBF	XBF	XBF	XBF	XWF	XWF	XWF	XWF	ACT-1	P1	
305B	OFFICE	X-TERRAZZO	C1	XBF/B1	XBF	XBF	B1	XWF/P1	XWF	XWF	P1	ACT-1	–	
306	STORAGE	X-TERRAZZO	XWF	B4	B4	B4	B4	P1	P1	P1	P1	ACT-1	–	
307	CONFERENCE	X-TERRAZZO	C1	B1	B1	B1	B1	P1	P1	P1	P1	ACT-1	–	
307B	OPEN OFFICE	X-TERRAZZO	XFT	XBF	XBF	B5	B5	PB	PB	PB	PB	ACT-1	–	
308A	OPEN OFFICES	X-CONC	C2	XBF/B5	XBF/B5	XBF/B5	XBF	XWF/P1	XWF/P1	XWF/P1BD	XWF	ACT-1	P1	
309	SERVER		XFT	XBF	XBF	XBF	XBF	P1	P1	P1	P1	ACT-1	–	8
310A	OPEN OFFICES	X-TERRAZZO	C2	XBF	XBF/B5	B2	XBF	P1	P1	P1	P1	ACT-1	P1	
310B	FILE ROOM	X-CONC	L1	XBF	XBF	XBF	XBF	P1	P1	P1	P1	ACT-1	–	
310C	FILES	X-CONC	L1	XBF	XBF	XBF	XBF	P1	P1	P1	P1	ACT-1	–	
310D	TOILET	X-TERRAZZO	XFT	XBF	XBF	XBF	XBF	XWF/P1	XWF/P1	XWF/P1	XWF/P1	XCF/P1	–	
311A	VESTIBULE	X-TERRAZZO	XFT	XBF	XBF	XBF	XBF	PB	PB	PB	PB	ACT-1	P1	
311B	VESTIBULE	X-TERRAZZO	C2	XBF	XBF	XBF	XBF	P1	P1	P1	P1	ACT-1	P1	
311C	OFFICE	X-CONC	C1	XBF	XBF	XBF	XBF	XWF	XWF	XWF	XWF	ACT-1	P1	
311D	TOILET	X-TERRAZZO	XFT	XBF	XBF	XBF	XBF	XWF/P1	XWF/P1	XWF/P1	XWF/P1	XCF/P1	–	
312	PANTRY	X-TERRAZZO	L1	XBF	B4	B4	B4	P1	P1	P1	P1	ACT-1	–	
314A	VESTIBULE	X-TERRAZZO	XFT	XBF	XBF	XBF	XBF	P1	P1	P1	P1	ACT-1	P1	
314B	OFFICE	X-CONC	C1	XBF	XBF	XBF	XBF	XWF	XWF	XWF	XWF	ACT-1	P1	
314C	TOILET	X-TERRAZZO	XFT	XBF	XBF	XBF	XBF	XWF/P1	XWF/P1	XWF/P1	XWF/P1	XCF/P1	–	
314D	RECEPTION	X-CONC	C1	B1	XBF	XBF	XBF	P1	P1	P1	P1	ACT-1	P1	
314E	OFFICE		C1	XBF	XBF/B5	XBF	XBF	P1	P1	P1	P1	ACT-1	P1	
314F	OFFICE	X-CONC	C1	XBF/B1	B1	XBF	XBF	P1	P1	P1	P1	ACT-1	P1	
314G	FILES	X-CONC	L1	XBF	XBF	XBF	XBF	P1	P1	P1	P1	ACT-1	–	
314H	TOILET	X-TERRAZZO	XFT	XBF	XBF	XBF	XBF	XWF/P1	XWF/P1	XWF/P1	XWF/P1	XCF/P1	–	
314J	CONFERENCE		C2	B1	B1	B1	B1	P1	P1	P1	P1	ACT-1	–	
315A	CONFERENCE		C2	XBF	B2	XBF/B2	XBF/B2	XWF	P1	XWF/P1	XWF/P1	ACT-1	P1	
315B	FILES		L1	XBF	XBF	XBF	XBF	P1	P1	P1	P1	ACT-1	–	
315C	TOILET	X-TERRAZZO	XFT	XBF	XBF	XBF	XBF	XWF/P1	XWF/P1	XWF/P1	XWF/P1	XCF/P1	–	
316	OFFICE	X-CONC	C1	XBF	XBF	XBF	XBF	P1	P1	P1	P1	ACT-1	P1	
318A	CONFERENCE	X-TERRAZZO	C2	B2	B2	B2	B2	P1	P1	P1	P1	ACT-1	–	
317A	OPEN OFFICES	X-TERRAZZO	C2	B2	XBF	XBF	B2	P1	XWF	XWF	P1	ACT-1	P1	
317B	OPEN OFFICES	X-CONC	C2	B6	B6	B6	B6	XWF	XWF	XWF	XWF	ACT-1	P1	12
317C	OPEN OFFICES		C2	XBF/B2	XBF/B2	XBF	B2	P1	P1	P1	P1	ACT-1	P1	
320A	MEN'S TOILET	X-TERRAZZO	XFT	B5	B5	B5	B5	CT-1/P1	CT-1/P1	CT-1/P1	CT-1/P1	P1	–	
320B	MEN'S TOILET	X-TERRAZZO	XFT	XBF	XBF	XBF	XBF	XWF/P1	XWF/P1	XWF/P1	XWF/P1	XCF/P1	–	
322A	OPEN OFFICE	X-CONC	C2	B6	B6	B6	B6	XWF/P1	XWF	XWF	XWF	ACT-1	P1	12
322B	OPEN OFFICE	X-TERRAZZO	XFT	XBF	XBF	N/A	B5	PB	PB	N/A	PB	ACT-1	–	
322C	OFFICE	X-CONC	C1	XBF	XBF	B1	B1	P1	P1	P1	P1	ACT-1	–	
322D	OFFICE	X-CONC	C1	XBF	XBF/B5	B1	XBF	P1	P1	P1	P1	ACT-1	P1	
325	OFFICE	X-CONC	C1	B1	B1	B1	B1	P1	P1	P1	P1	ACT-1	–	
326A	VESTIBULE	X-CONC	C1	B1	B1	XBF	B1	P1	P1	P1	P1	ACT-1	–	
326B	OFFICE	X-CONC	C1	XBF/B5	B1	XBF	XBF	P1	P1	P1	P1	ACT-1	P1	
326C	FILES	X-CONC	XFF	XBF	XBF	XBF	XBF	XWF/P1	XWF/P1	XWF/P1	XWF/P1	ACT-1	–	
326D	FILES	X-CONC	L1	XBF	XBF	XBF	XBF	P1	P1	P1	P1	ACT-1	–	
326E	TOILET	X-TERRAZZO	XFT	XBF	XBF	XBF	XBF	XWF/P1	XWF/P1	XWF/P1	XWF/P1	XCF	–	
326F	OFFICE	X-CONC	C1	B1	B1	B1	XBF	P1	P1	P1	P1	ACT-1	P1	
326G	OFFICE	X-CONC	C1	B1	XBF	XBF	XBF	P1	P1	P1	P1	ACT-1	P1	
326H	FILES	X-CONC	L1	XBF	XBF	XBF	XBF	P1	P1	P1	P1	ACT-1	–	
326J	TOILET	X-TERRAZZO	XFF	XBF	XBF	XBF	XBF	XWF/P1	XWF/P1	XWF/P1	XWF/P1	XCF/P1	–	
327A	WAITING AREA	X-CONC	C1	XBF	B1	B1	XBF	P1	P1	P1	P1	ACT-1	–	
327B	FILES	X-CONC	L1	XBF	XBF	XBF	XBF	P1	P1	P1	P1	ACT-1	–	
327C	OFFICE	X-CONC	C1	XBF	B1	XBF	B1	P1	P1	P1	P1	ACT-1	P1	
327D	FILES	X-CONC	L1	XBF	XBF	XBF	XBF	P1	P1	P1	P1	ACT-1	–	
327E	TOILET	X-TERRAZZO	XFF	XBF	XBF	XBF	XBF	XWF/P1	XWF/P1	XWF/P1	XWF/P1	XCF/P1	–	
327F	OFFICE	X-CONC	C1	B1	XBF	XBF/B1	XBF/B1	P1	P1	P1	P1	ACT-1	P1	
327G	STORAGE	X-CONC	L1	XBF	XBF	XBF	XBF	P1	P1	P1	P1	ACT-1	–	
327H	TOILET	X-TERRAZZO	XFF	XBF	XBF	XBF	XBF	XWF/P1	XWF/P1	XWF/P1	XWF/P1	XCF/P1	–	
328	OFFICE	X-CONC	C1	B6	B6	B6	B6	XWF	XWF	XWF/P7	XWF	ACT-1	P1	
328B	TOILET	X-TERRAZZO	XFF	XBF	XBF	XBF	XBF	XWF/P1	XWF/P1	XWF/P1	XWF/P1	XCF/P1	–	
330A	OFFICE	X-CONC	C1	XBF	XBF	XBF	XBF/B5	P1	P1	P1	P1	ACT-1	P1	
330B	OFFICE	X-CONC	C1	B6	B6	B6	B6	XWF/P7	XWF	XWF	XWF	ACT-1	P1	
330C	TOILET	X-TERRAZZO	XFF	XBF	XBF	XBF	XBF	XWF/P1	XWF/P1	XWF/P1	XWF/P1	XCF/P1	–	

NOTE: SEE SHEET A2.31 FOR FINISH KEY.
FOR SUPPLEMENTARY INFORMATION, SEE FINISH PLANS @ SHEET A1.11, A1.12 & A1.13
SEE SPECIFICATIONS, AND MILLWORK AND CASEWORK DETAILS FOR LAMINATE FINISHES.

Interior Improvements to DC Superior Courts Building 'B'

409 E Street, NW
Washington, DC 20001

U.S. General Services Administration
301 7th Street, SW, Room 2021
Washington, DC 20407

LEO A DALY
PLANNING ARCHITECTURE ENGINEERING INTERIORS
EST. 1915

1201 Connecticut Ave, NW
Washington DC 20036 USA
Tel 202-861-4600 Fax 202-872-8530

Dalco Incorporated
10005 Old Columbia Road Suite L261
Columbia, MD 21046
Tel: 410-290-8827
Fax: 410-290-8812

Contractor
Address

KEY PLAN

ISSUES / REVISIONS

NO.	DESCRIPTION	DATE

FILE LOG

ACTIVITY	REFERENCE	BY
Manager		
Design		
Draw		
Draw		
Draw		
Check		

REGISTRATION

JOB No 52010300

CONSTRUCTION PACKAGE

ISSUED FOR CONSTRUCTION (FINAL) APRIL 8, 2003

FINISH SCHEDULE (2ND & 3RD FLRS)

A2.32

© Leo A Daly Company 2003

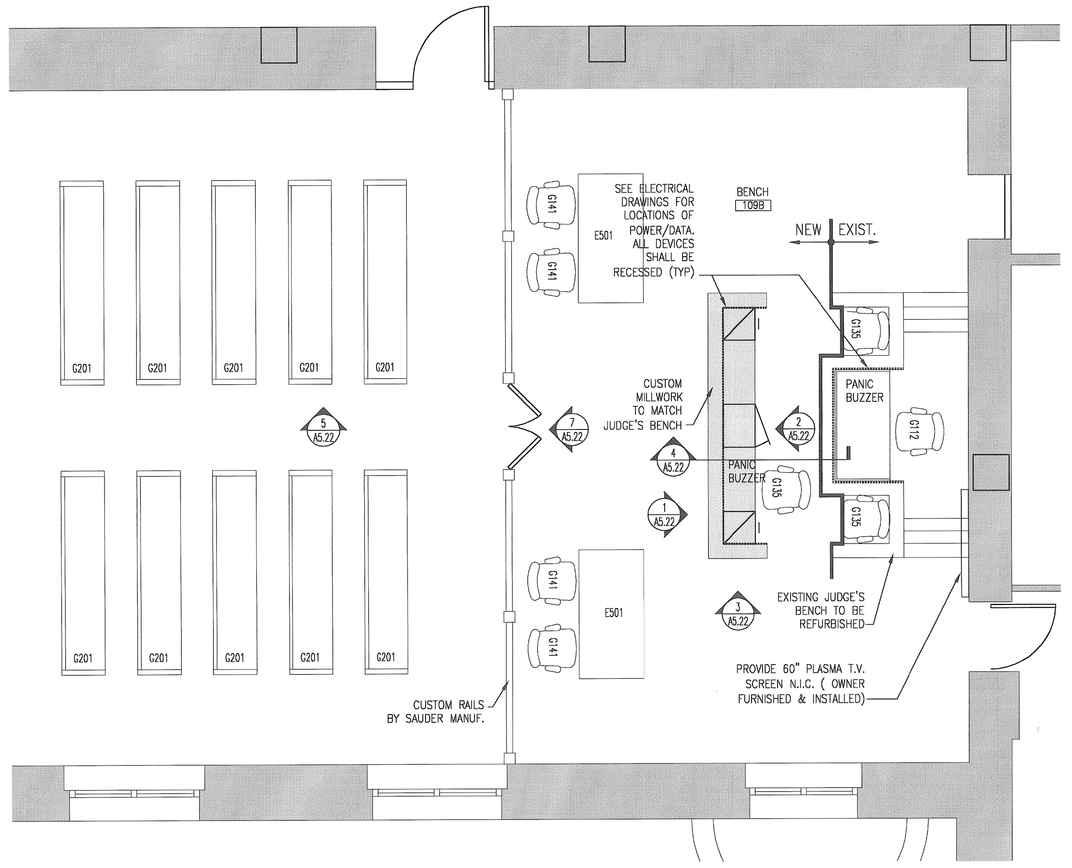

1 A5.01 ENLARGED COURTROOM FLOOR PLAN @ ROOM 109A & 109B
SCALE: 1/4" = 1'-0"

COORDINATE LOCATION OF POWER/DATA RECEPTACLES AT JUDGE'S DESK & CLERK'S DESK W/ ARCHITECT & OWNER (SEE ELEC. DWGS.)

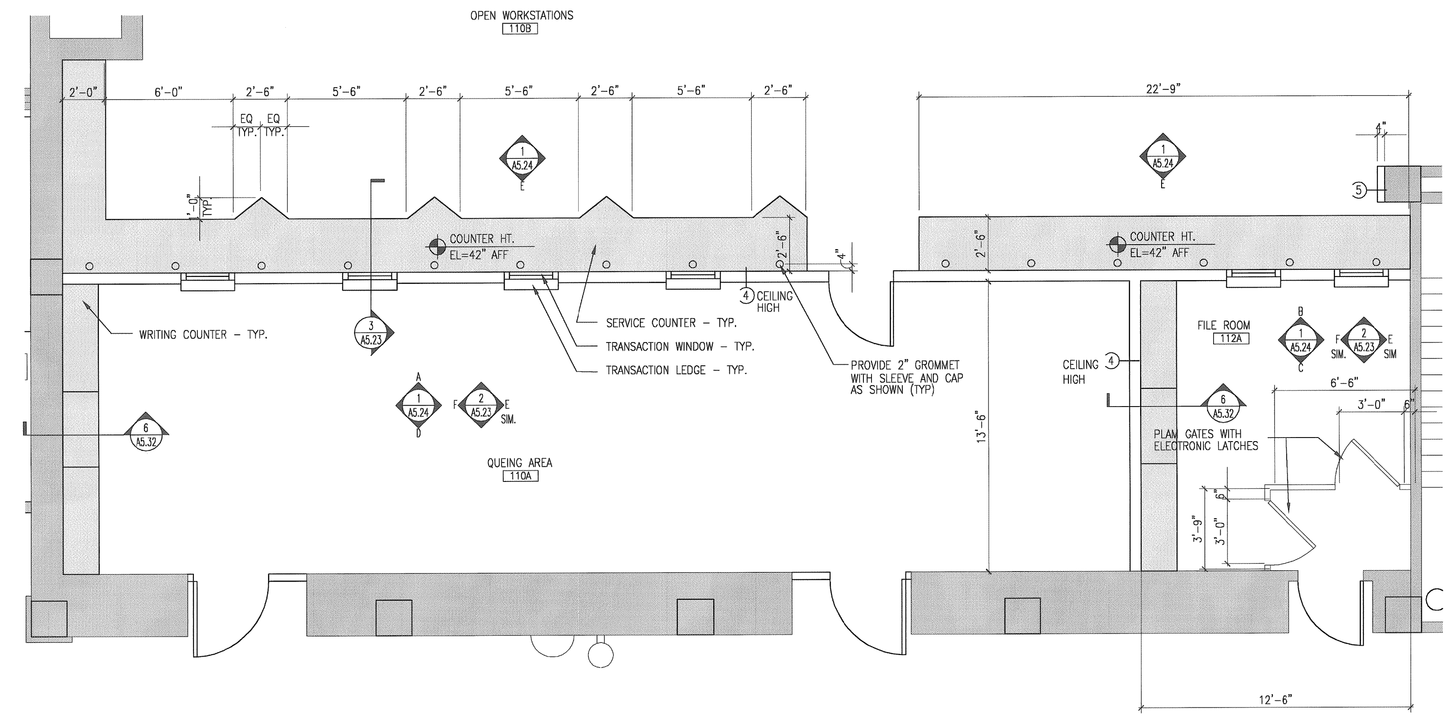

2 A5.01 ENLARGED FLOOR PLAN @ ROOM 110A, 110B & 112A
SCALE: 1/4" = 1'-0"

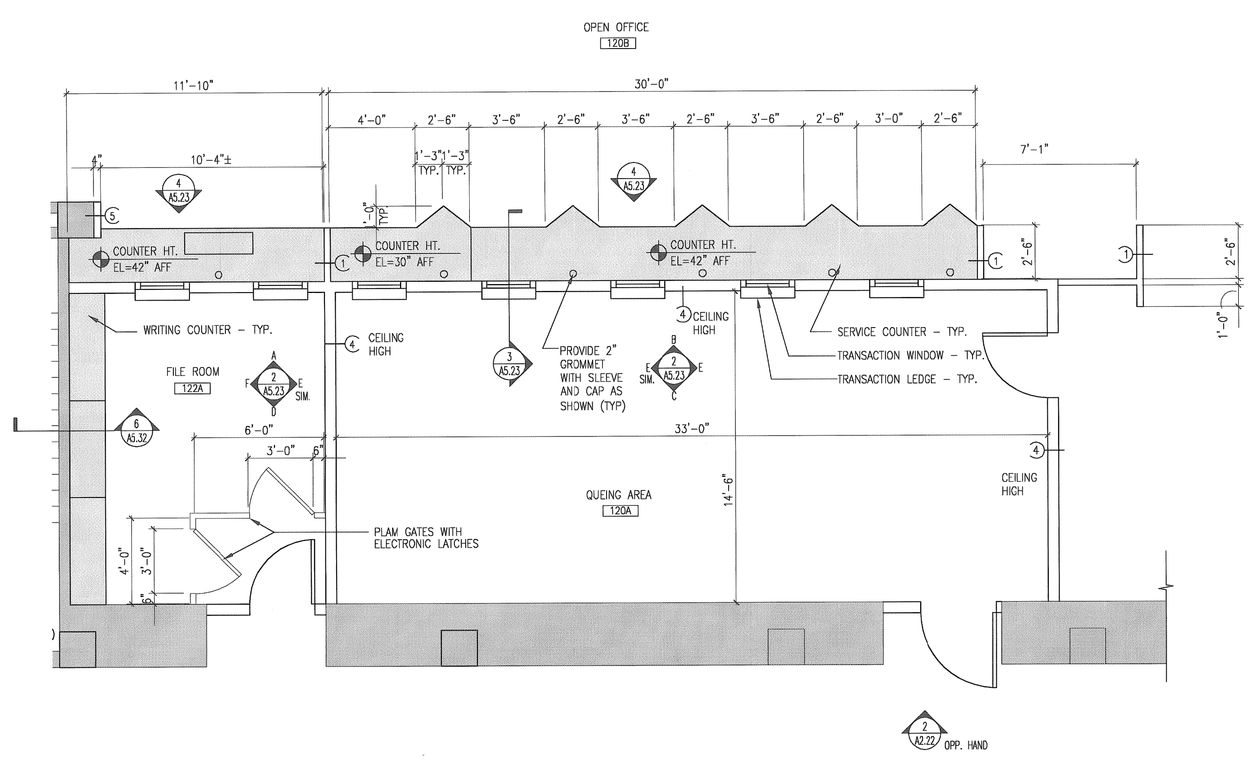

3 A5.01 ENLARGED FLOOR PLAN @ ROOM 120A, 120B & 122A
SCALE: 1/4" = 1'-0"

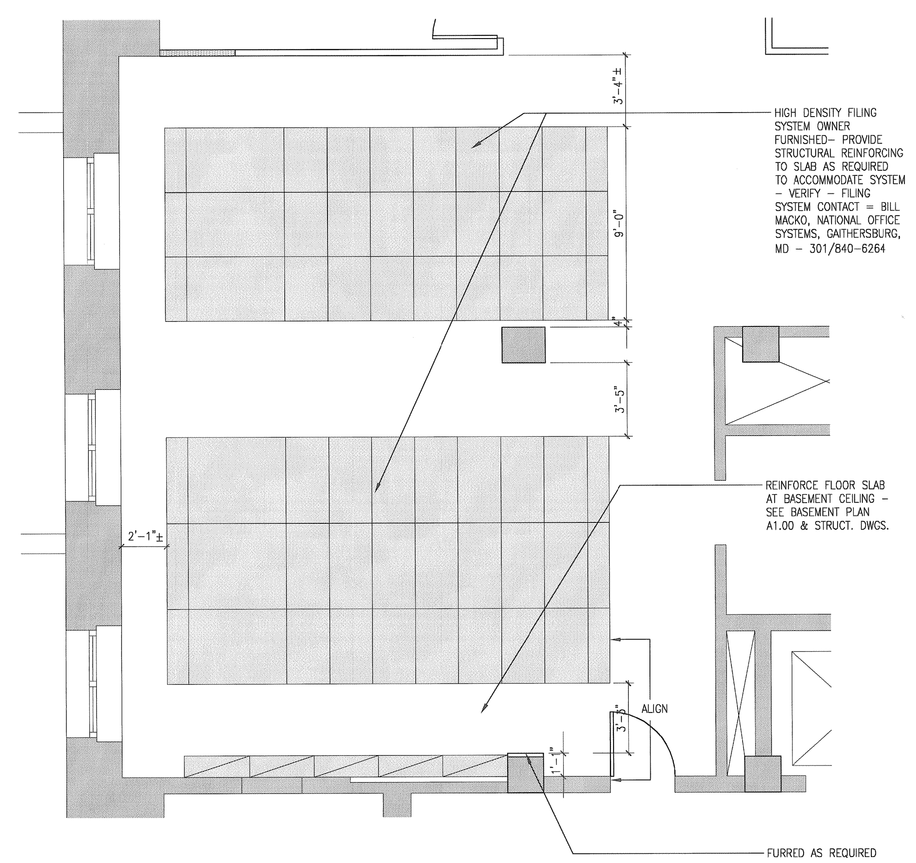

4 A5.01 ENLARGED FLOOR PLAN - FILE AREA @ ROOM 124A
SCALE: 1/4" = 1'-0"

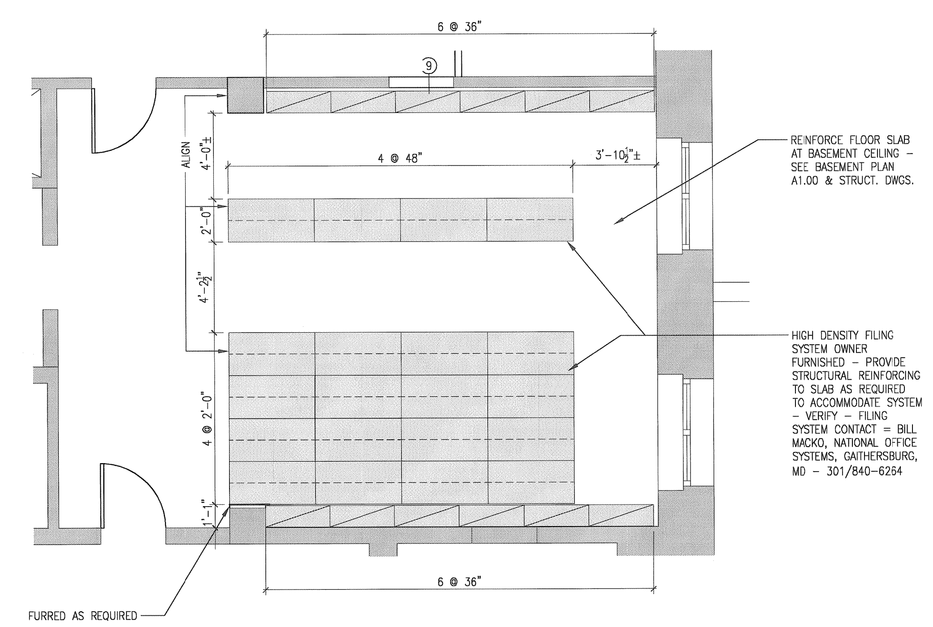

5 A5.01 ENLARGED FLOOR PLAN - FILE AREA @ ROOM 110J
SCALE: 1/4" = 1'-0"

Interior Improvements to DC Superior Courts Building 'B'

409 E Street, NW
Washington, DC 20001

U.S. General Services Administration
301 7th Street, SW, Room 2021
Washington, DC 20407

LEO A DALY
1201 Connecticut Ave, NW
Washington DC 20036 USA
Tel 202-861-4600 Fax 202-872-8530

Dalco
10005 Old Columbia Road Suite L261
Columbia, MD 21046
Tel: 410-290-8827
Fax: 410-290-8512

Contractor
Address

KEY PLAN

ISSUES / REVISIONS

NO.	DESCRIPTION	DATE

FILE LOG

ACTIVITY	REFERENCE	BY
Manager		
Design		
Draw		
Draw		
Draw		
Check		

REGISTRATION

JOB No 52010300

CONSTRUCTION PACKAGE

ISSUED FOR CONSTRUCTION (FINAL) APRIL 8, 2003

ENLARGED FLOOR PLANS

A5.01

© Leo A Daly Company 2003

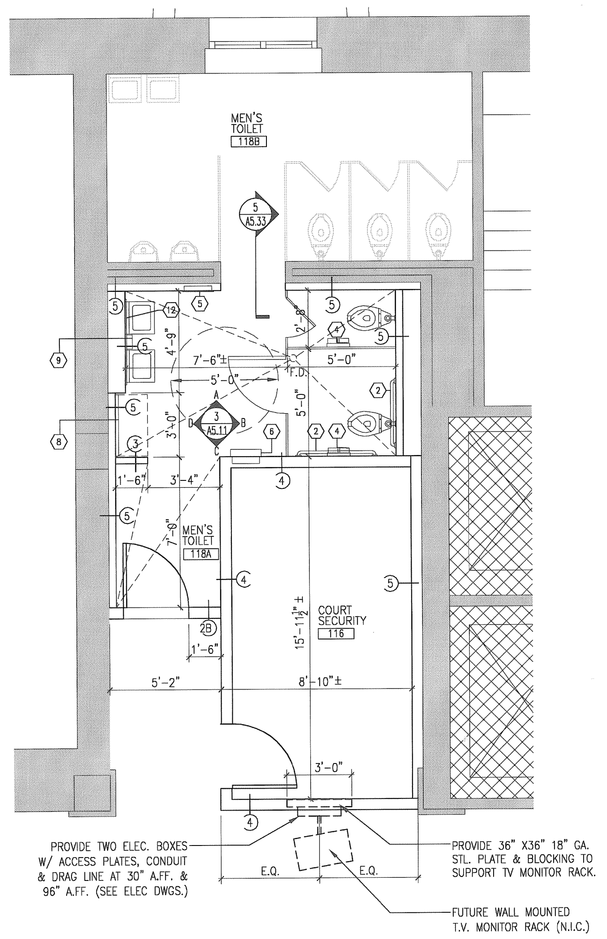

1 A5.02 ENLARGED MEN'S ROOM PLAN @ FIRST FLOOR
SCALE: 1/4" = 1'-0"

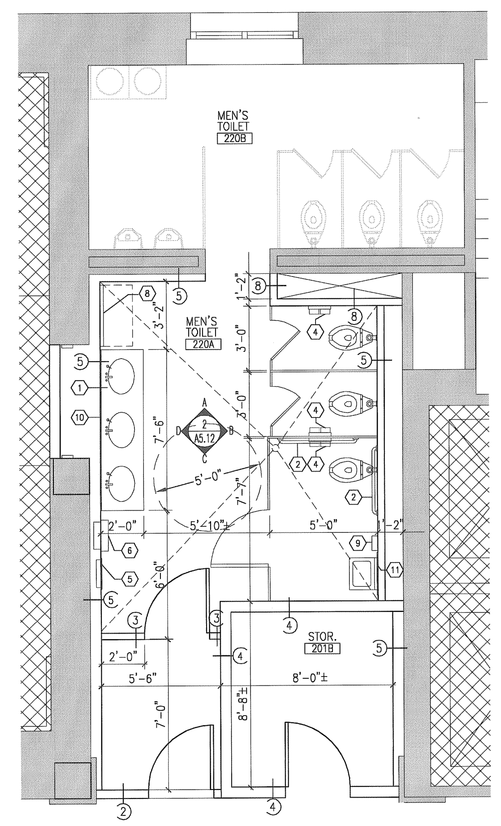

2 A5.02 ENLARGED MEN'S ROOM PLAN @ SECOND FLOOR
SCALE: 1/4" = 1'-0"

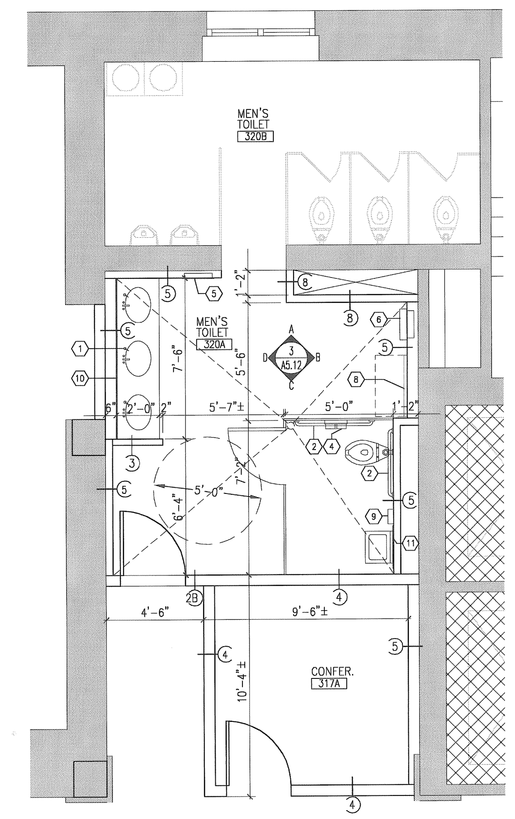

3 A5.02 ENLARGED MEN'S ROOM PLAN @ THIRD FLOOR
SCALE: 1/4" = 1'-0"

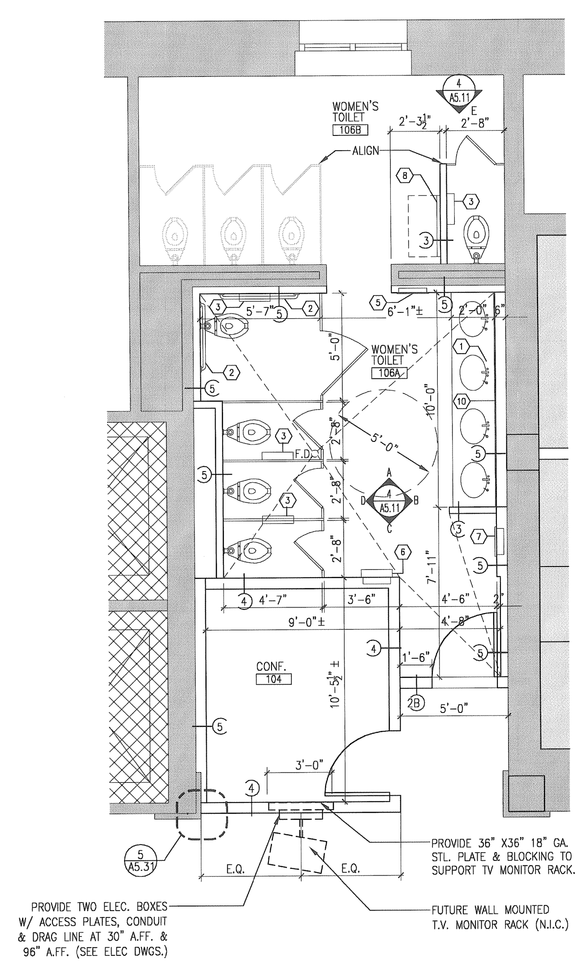

4 A5.02 ENLARGED WOMEN'S ROOM PLAN @ FIRST FLOOR
SCALE: 1/4" = 1'-0"

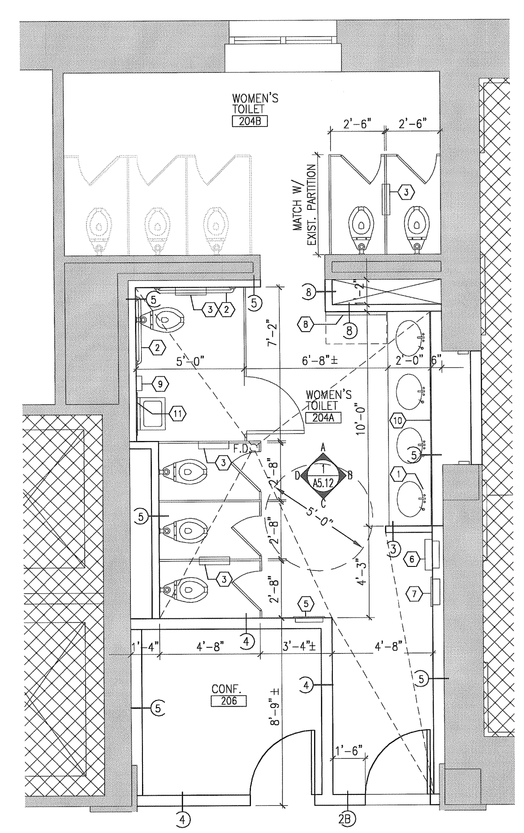

5 A5.02 ENLARGED WOMEN'S ROOM PLAN @ SECOND FLOOR
SCALE: 1/4" = 1'-0"

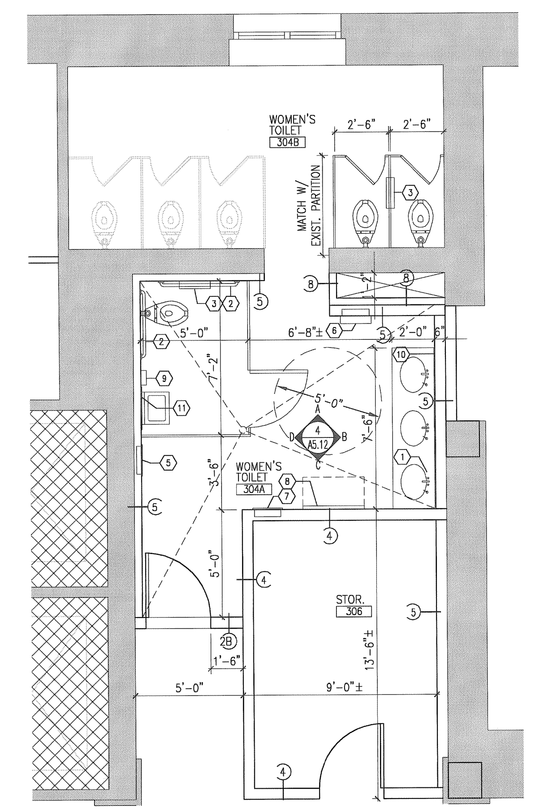

6 A5.02 ENLARGED WOMEN'S ROOM PLAN @ THIRD FLOOR
SCALE: 1/4" = 1'-0"

Interior Improvements to DC Superior Courts Building 'B'

409 E Street, NW
Washington, DC 20001

U.S. General Services Administration
301 7th Street, SW, Room 2021
Washington, DC 20407

LEO A DALY
PLANNING ARCHITECTURE ENGINEERING INTERIORS
EST. 1915

1201 Connecticut Ave, NW
Washington DC 20036 USA
Tel 202-861-4600 Fax 202-872-8530

Dalco Incorporated
10005 Old Columbia Road Suite L261
Columbia, MD 21046
Tel: 410-290-8827
Fax: 410-290-8812

Contractor
Address

KEY PLAN

ISSUES / REVISIONS

NO.	DESCRIPTION	DATE

FILE LOG

ACTIVITY	REFERENCE	BY
Manager		
Design		
Draw		
Draw		
Draw		
Check		

REGISTRATION

JOB No 52010300

CONSTRUCTION PACKAGE

ISSUED FOR CONSTRUCTION (FINAL) APRIL 8, 2003

ENLARGED TOILET PLANS

A5.02

© Leo A Daly Company 2003

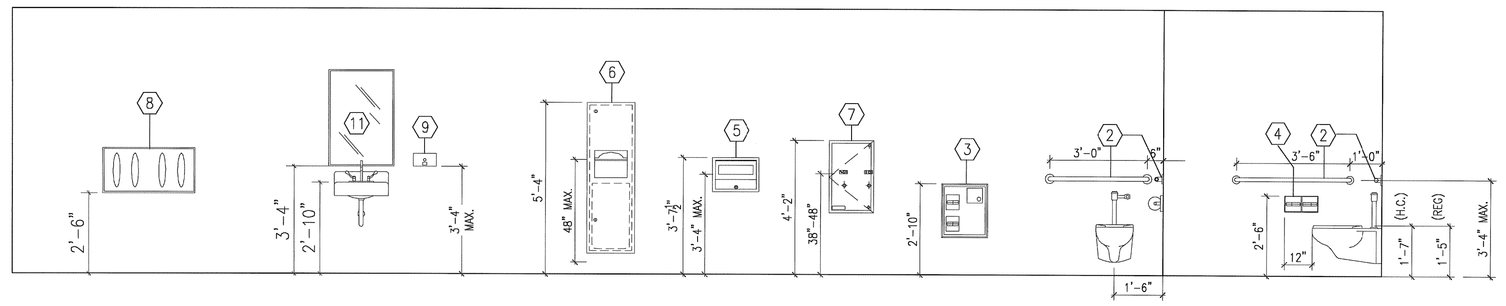

1 A5.11 TYPICAL TOILET FIXTURE MOUNTING HEIGHT
SCALE: 3/8" = 1'-0"

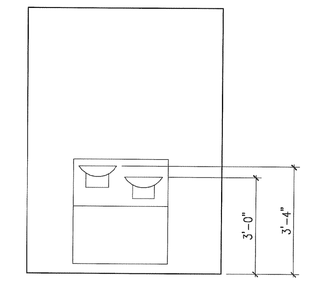

2 A5.11 TYPICAL DRINKING FOUNTAIN MOUNTING HEIGHT
SCALE: 3/8" = 1'-0"

NOTES

* MAXIMIZE MIRROR SIZE. TWO PIECES OF GLASS IN ONE-PIECE STAINLESS STL. FRAME MAY BE REQ.

** INSTALL ANCHOR PLATES

TOILET ROOM ACCESSORY SCHEDULE

NO.	DESCRIPTION	BOBRICK CATALOG NO.	MOUNTING HT.
1	SOAP DISPENSER	B-8221	
2	GRAB BARS - TOILET**	B-550 + 36"/42"	36" ℄
3	T.S., T.P., & SAN. NAP. DISP.	B-3570 B-35709	34" TOP
4	TOILET PAPER DISPENSER	B-6999	30" TOP
5	T.S.DISP.	B-3013	43 1/2" TOP
6	PAPER TOWER DISP./WASTE	B-3904	59 1/2" TOP
7	SANIT NAPKINS VENDOR	B-3500	50" TOP
8	DIAPER CHANGING STATION	B-2230	45" TOP
9	SOAP DISPENSER	B-2112	40" BOTTOM
10	MIRROR	FRAMELESS MIRROR	SEE DWG.
11	MIRROR	TOP&BOTTOM FRAME 24"X36"	40" BOTTOM
12	MIRROR	TOP&BOTTOM FRAME 48"X36"	40" BOTTOM
13	ROBE HOOK	B-2116	54" TOP

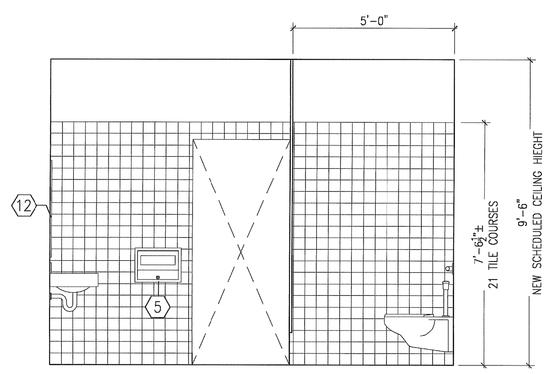

A

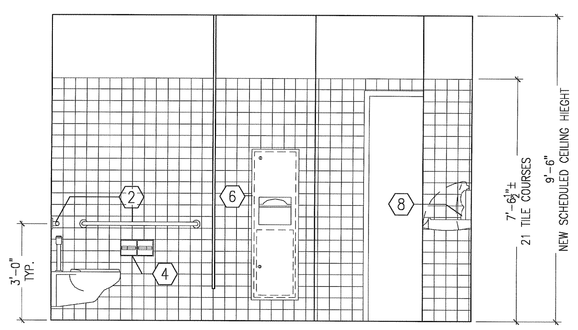

C

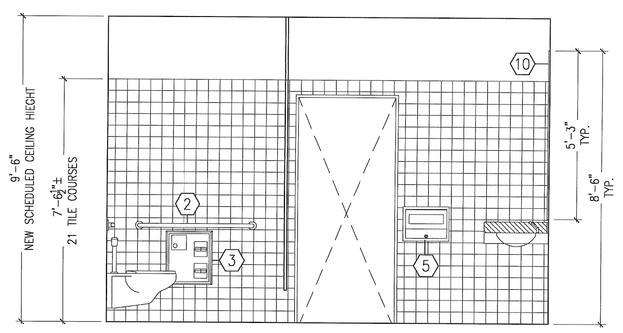

A

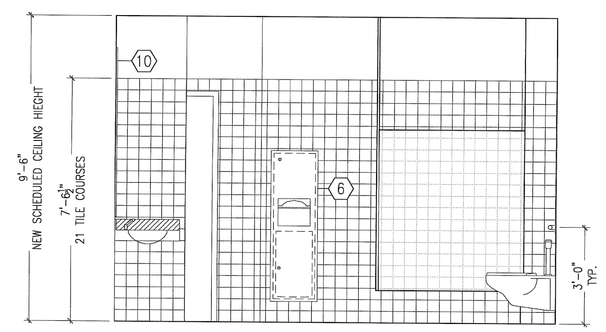

C

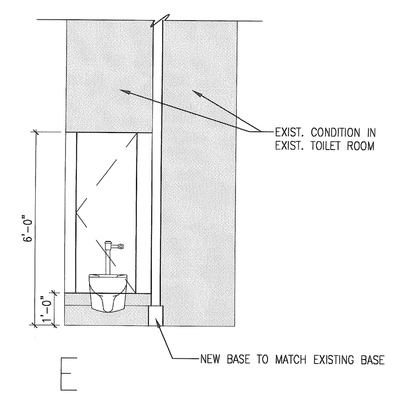

E

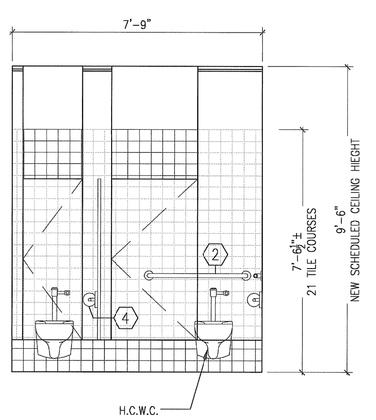

B

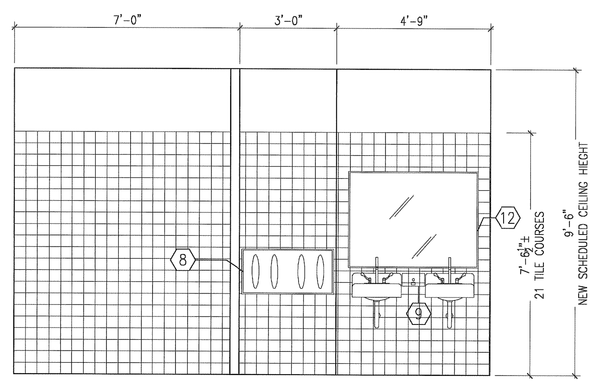

D

3 A5.11 RESTROOM ELEVATION - MEN'S ROOM @ FIRST ROOM
SCALE: 3/8" = 1'-0"

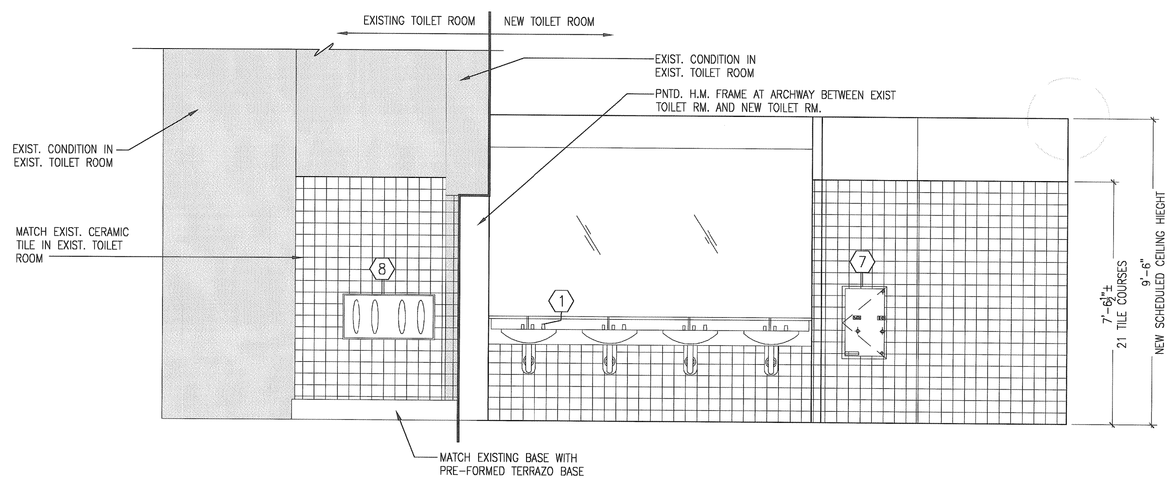

B

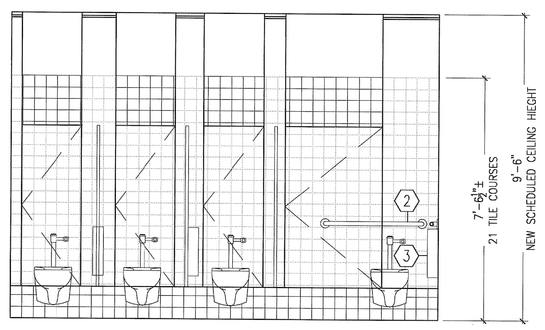

D

4 A5.11 RESTROOM ELEVATION - WOMEN'S ROOM @ FIRST ROOM
SCALE: 3/8" = 1'-0"

Interior Improvements to DC Superior Courts Building 'B'

409 E Street, NW
Washington, DC 20001

U.S. General Services Administration
301 7th Street, SW, Room 2021
Washington, DC 20407

LEO A DALY
PLANNING ARCHITECTURE ENGINEERING INTERIORS
EST. 1915
1201 Connecticut Ave, NW
Washington DC 20036 USA
Tel 202-861-4600 Fax 202-872-8530

Dalco
10005 Old Columbia Road Suite L261
Columbia, MD 21046
Tel: 410-290-8827
Fax: 410-290-8812

Contractor
Address

KEY PLAN

ISSUES / REVISIONS

NO.	DESCRIPTION	DATE

FILE LOG

ACTIVITY	REFERENCE	BY
Manager		
Design		
Draw		
Draw		
Draw		
Check		

REGISTRATION

JOB No 52010300

CONSTRUCTION PACKAGE

ISSUED FOR CONSTRUCTION (FINAL) APRIL 8, 2003

TOILET ELEVATIONS

A5.11

© Leo A Daly Company 2003

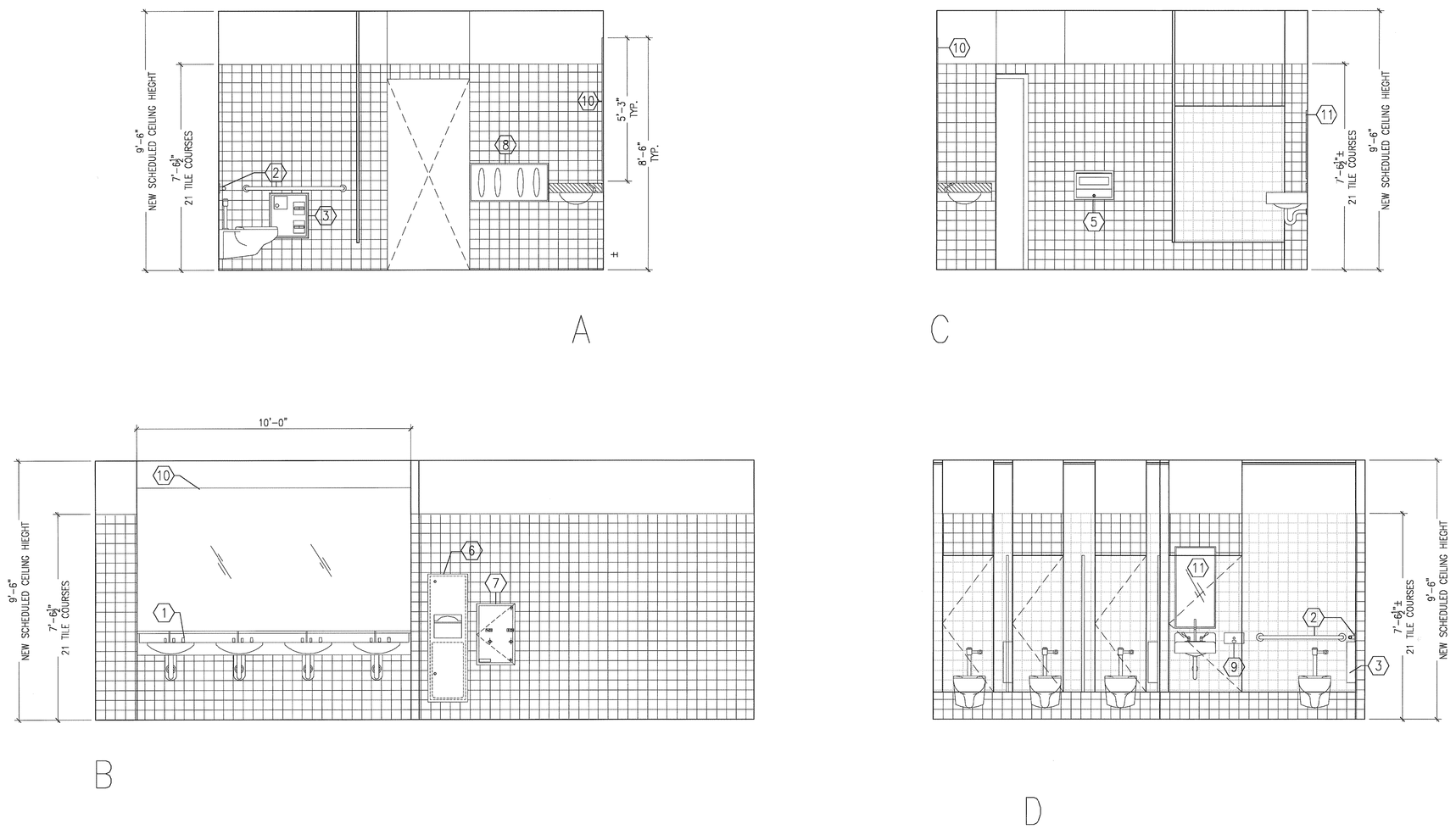

1 A5.12 RESTROOM ELEVATION – WOMEN'S ROOM @ SECOND FLOOR
SCALE: 3/8" = 1'-0"

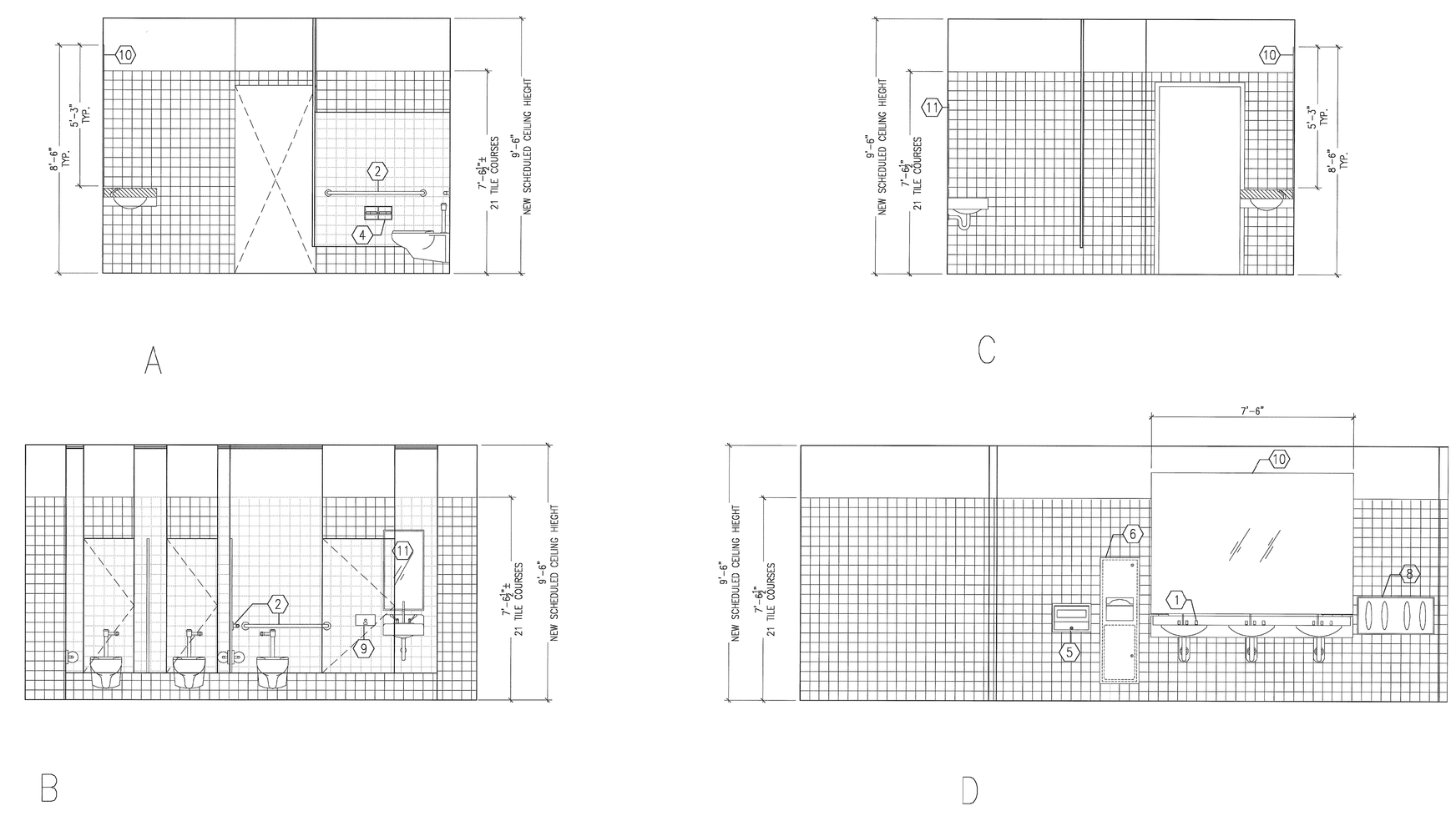

2 A5.12 RESTROOM ELEVATION – MEN'S ROOM @ SECOND FLOOR
SCALE: 3/8" = 1'-0"

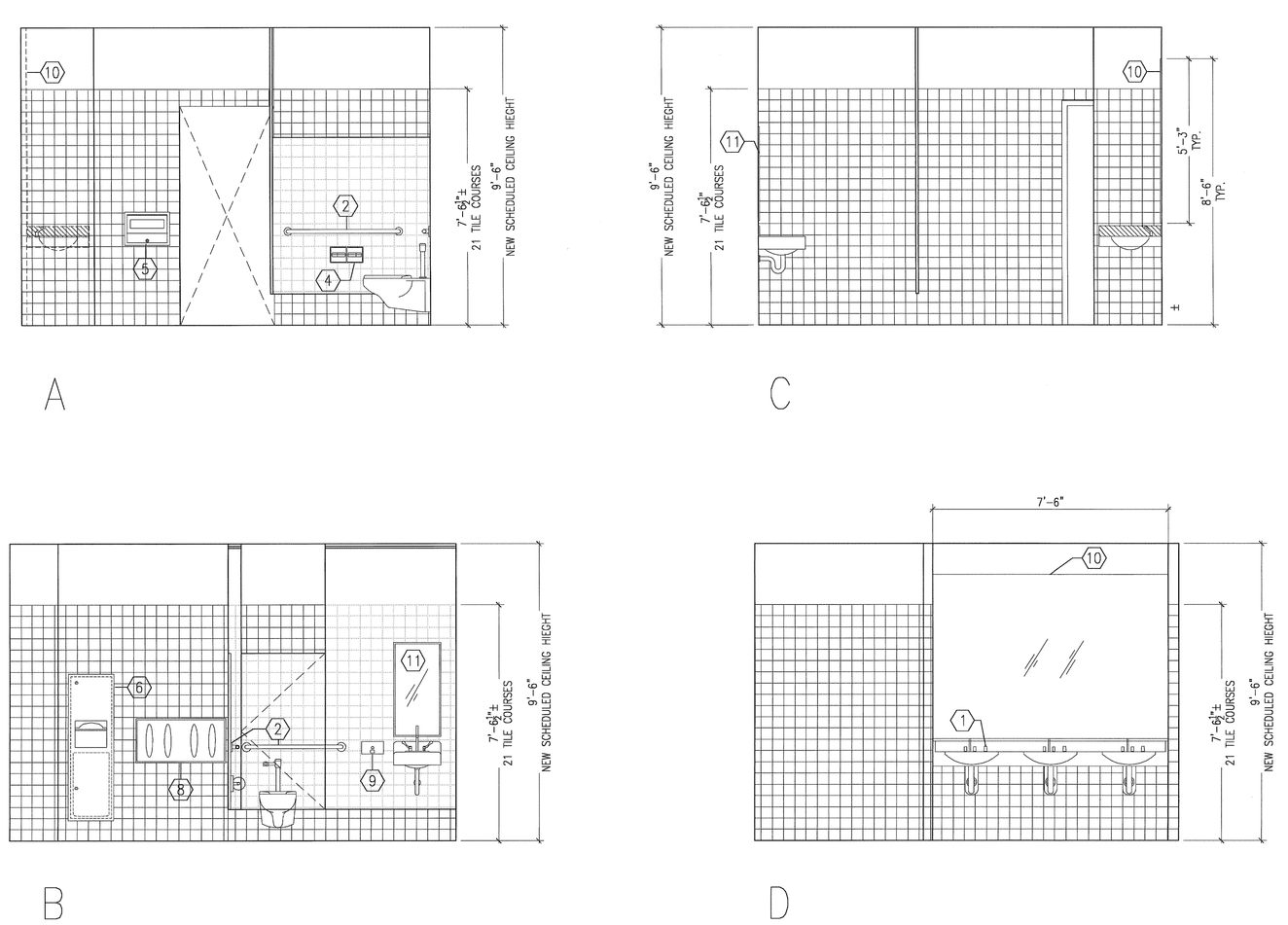

3 A5.12 RESTROOM ELEVATION – MEN'S ROOM @ THIRD FLOOR
SCALE: 3/8" = 1'-0"

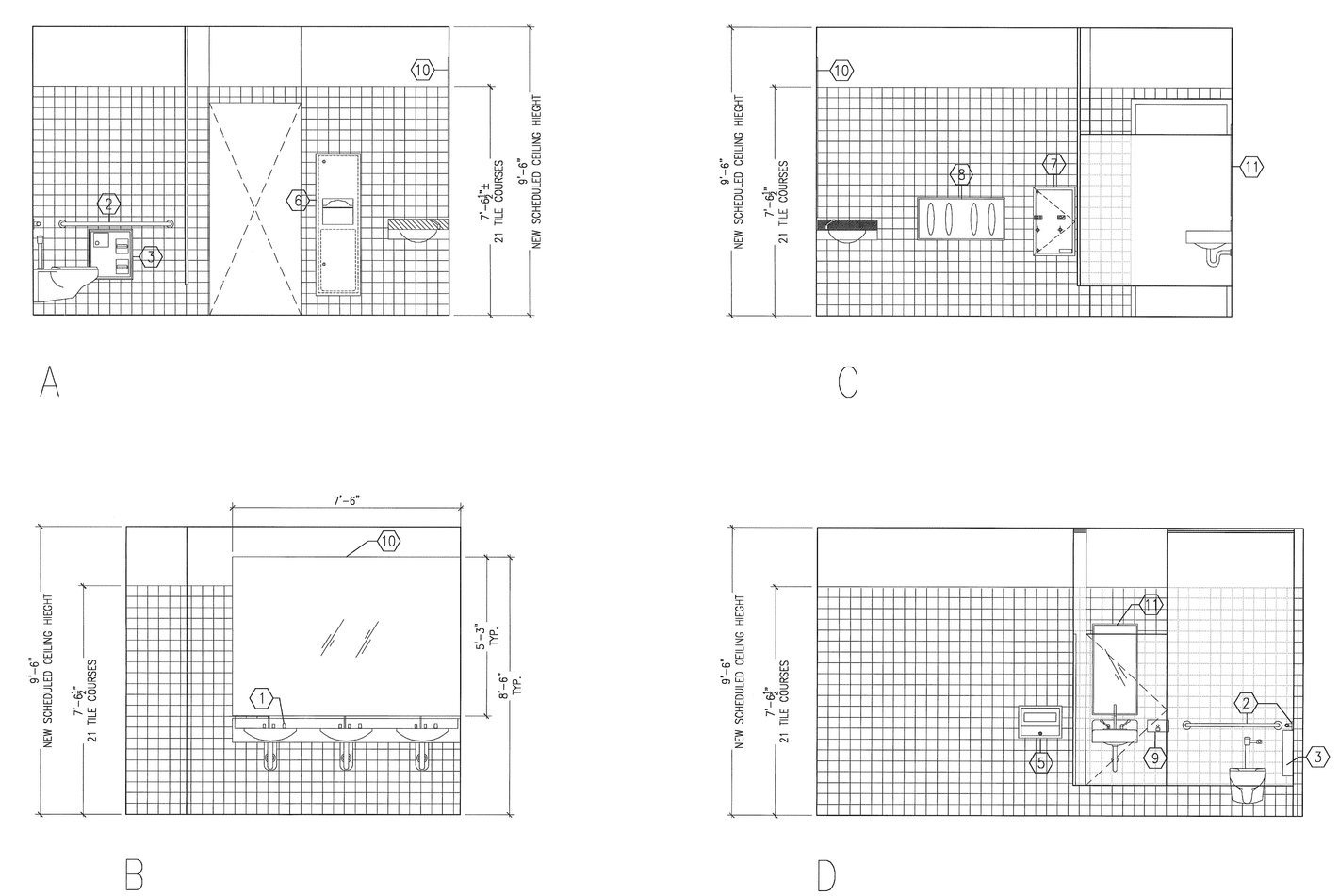

4 A5.12 RESTROOM ELEVATION – WOMEN'S ROOM @ THIRD FLOOR
SCALE: 3/8" = 1'-0"

Interior Improvements to
DC Superior Courts
Building 'B'

409 E Street, NW
Washington, DC 20001

U.S. General Services Administration
301 7th Street, SW, Room 2021
Washington, DC 20407

LEO A DALY
PLANNING ARCHITECTURE ENGINEERING INTERIORS
EST. 1915

1201 Connecticut Ave, NW
Washington DC 20036 USA
Tel 202-861-4600 Fax 202-872-8530

Dalco
10005 Old Columbia Road Suite L261
Columbia, MD 21046
Tel: 410-290-8827
Fax: 410-290-8812

Contractor
Address

KEY PLAN

ISSUES / REVISIONS

NO.	DESCRIPTION	DATE

FILE LOG

ACTIVITY	REFERENCE	BY
Manager		
Designer		
Drawer		
Drawer		
Drawer		
Checker		

REGISTRATION

JOB No 52010300

CONSTRUCTION PACKAGE

ISSUED FOR CONSTRUCTION (FINAL) APRIL 8, 2003

TOILET ELEVATIONS

A5.12

© Leo A Daly Company 2003

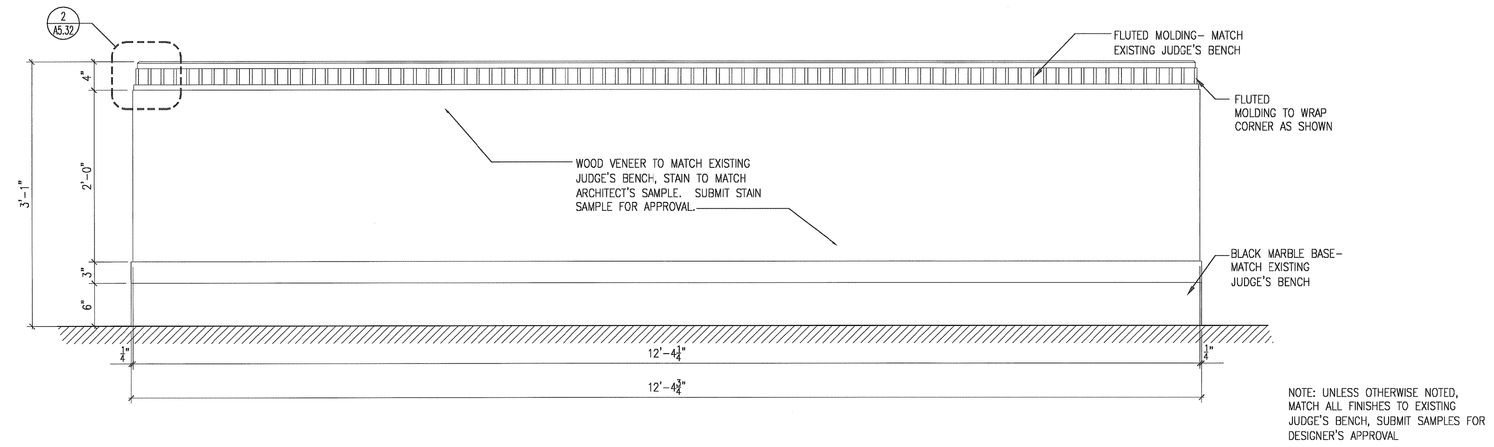

NOTE: UNLESS OTHERWISE NOTED, MATCH ALL FINISHES TO EXISTING JUDGE'S BENCH. SUBMIT SAMPLES FOR DESIGNER'S APPROVAL.

1 / A5.22 CLERK'S BENCH FRONT ELEVATION @ COURTROOMS – TYP.
SCALE: 1" = 1'–0"

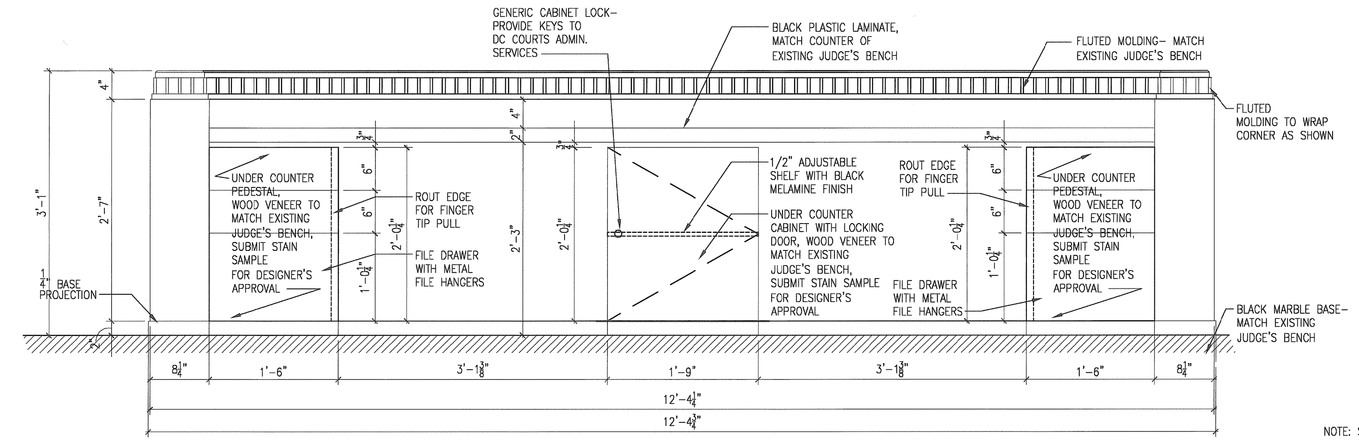

NOTE: SUBMIT SHOP DRAWINGS FOR DESIGNER'S REVIEW

2 / A5.22 CLERK'S BENCH ELEVATION @ COURTROOMS –TYP.
SCALE: 1" = 1'–0"

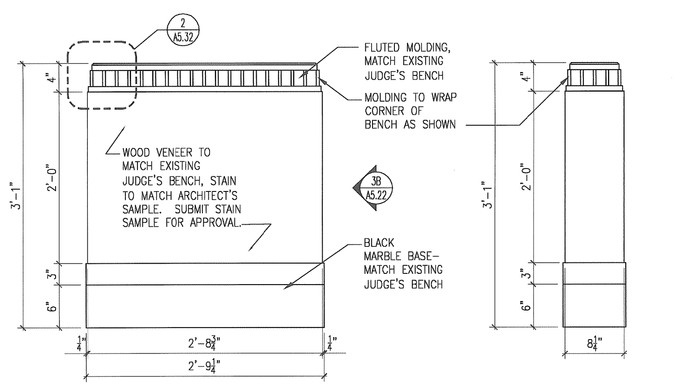

6A SIDE PANEL– SIDE VIEW

6B SIDE PANEL– END VIEW

3 / A5.22 CLERK'S BENCH SIDE ELEVATION @ COURTROOMS – TYP.
SCALE: 1" = 1'–0"

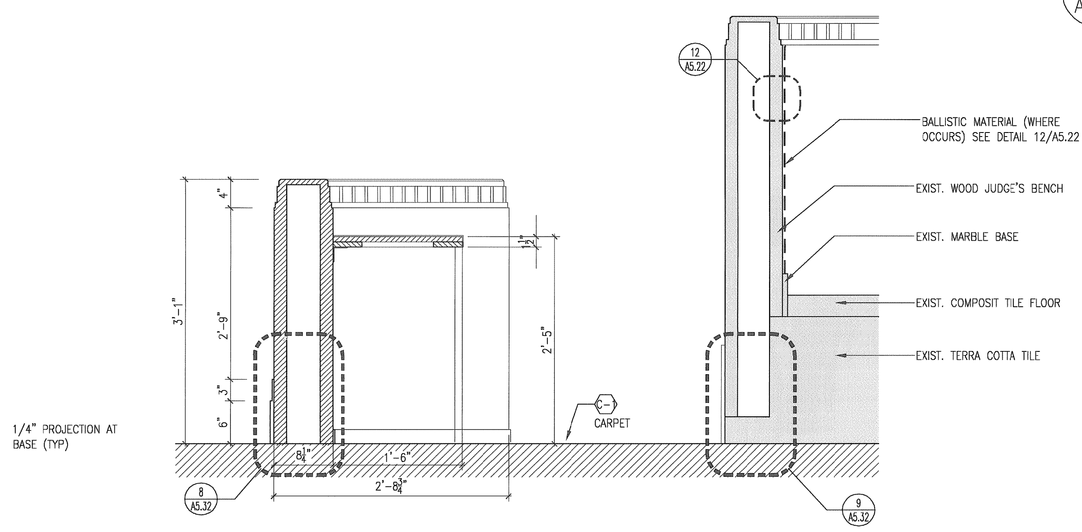

4 / A5.22 CLERK'S BENCH SECTION @ COURTROOMS – TYP.
SCALE: 1" = 1'–0"

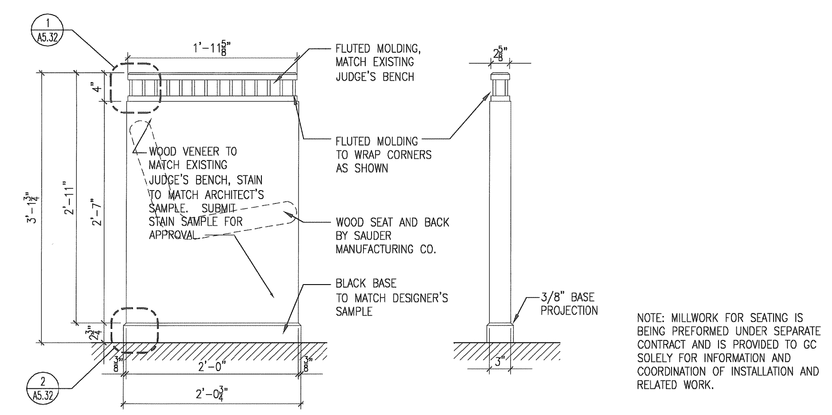

NOTE: MILLWORK FOR SEATING IS BEING PREFORMED UNDER SEPARATE CONTRACT AND IS PROVIDED TO GC SOLELY FOR INFORMATION AND COORDINATION OF INSTALLATION AND RELATED WORK.

5 / A5.22 BENCH FRONT & SIDE ELEVATIONS @ COURTROOMS –TYP.
SCALE: 1" = 1'–0"

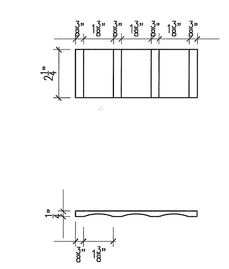

6 / A5.22 MOLDING SECTION & ELEVATION
SCALE: 3" = 1'–0"

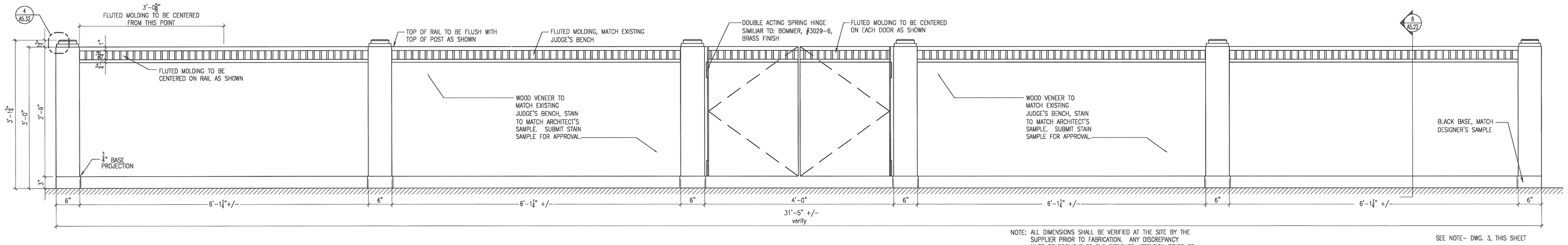

NOTE: ALL DIMENSIONS SHALL BE VERIFIED AT THE SITE BY THE SUPPLIER PRIOR TO FABRICATION. ANY DISCREPANCY MUST BE BROUGHT TO THE DESIGNER ATTENTION PRIOR TO PROCEEDING.

SEE NOTE– DWG. 3, THIS SHEET

7 / A5.22 FRONT RAIL ELEVATION @ COURTROOMS' BENCH AREA
SCALE: 1" = 1'–0"

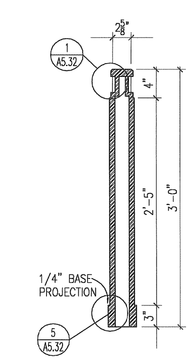

NOTE: MILLWORK FOR FRONT RAIL IS BEING PREFORMED UNDER SEPARATE CONTRACT AND IS PROVIDED TO GC SOLELY FOR INFORMATION AND COORDINATION OF INSTALLATION AND RELATED WORK. MANUFACTURER TO SUBMIT DETAIL TO DESIGNER FOR APPROVAL FOR SECURING FRONT RAIL TO THE SLAB.

8 / A5.22 FRONT RAIL SECTION
SCALE: 1" = 1'–0"

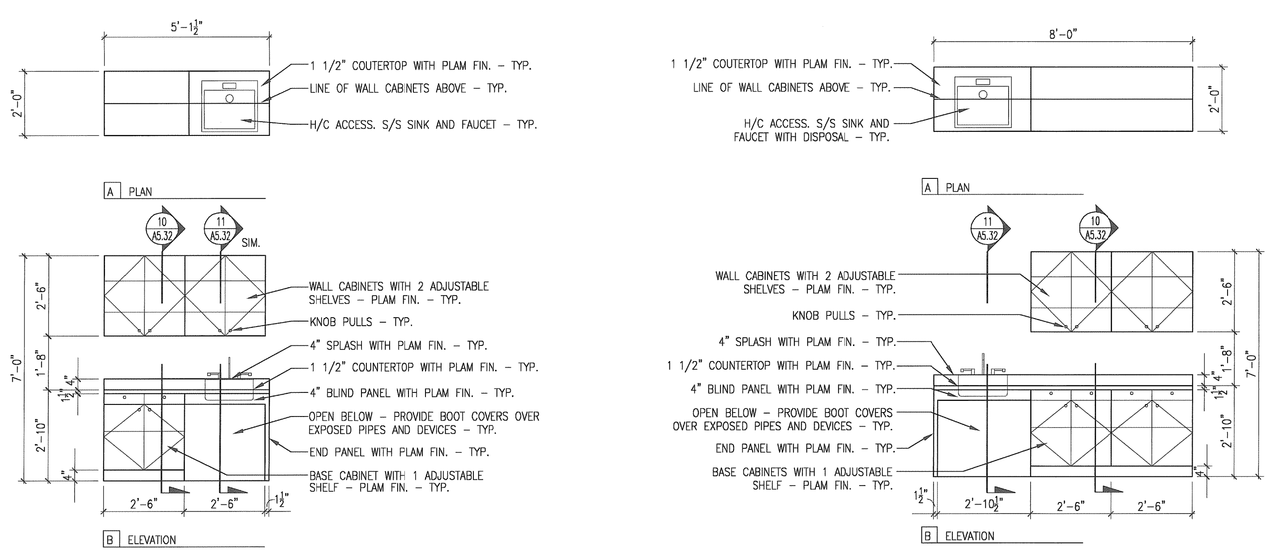

NOTE: 1. COUNTERTOP PLAM FINISH = WILSONART #4617–60, "FAIENCE"
2. BASE CABINET PLAM FINISH = WILSONART #09660, "SHADOW"
3. INTERIOR BASE CABINET FINISH = WHITE MELAMINE
4. PROVIDE SHOP DRAWINGS OF COUNTERS, CABINETS, WINDOW AND SIGNBOX ASSEMBLIES FOR REVIEW BY DESIGNER

9 / A5.22 TYPICAL KICHENETTE ELEVATION AND PLAN
SCALE: 3/8" = 1'–0"

10 / A5.22 KICHENETTE –SECOND FLOOR ONLY
SCALE: 3/8" = 1'–0"

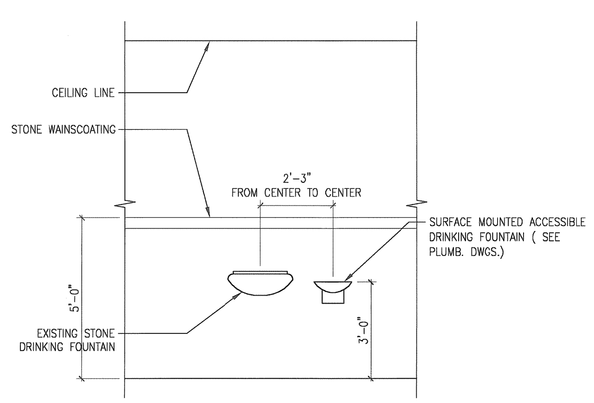

11 / A5.22 ELEV. @ FIRST FLOOR DRINKING FOUNTAIN
SCALE: 3/8" = 1'–0"

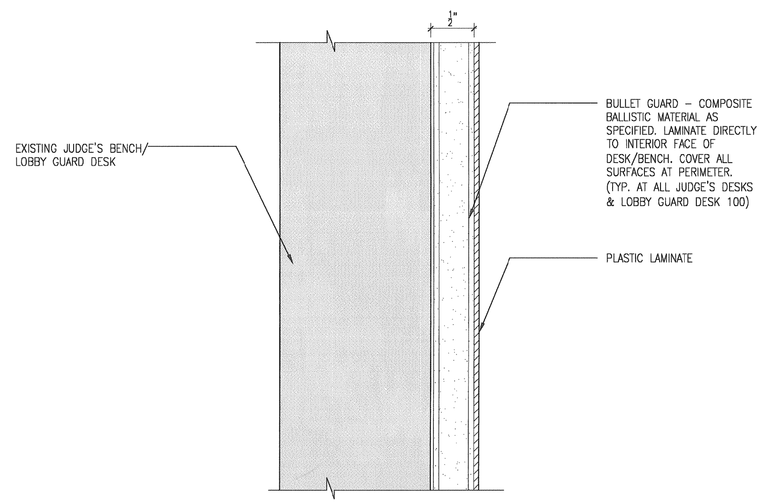

12 / A5.22 SECTION/PLAN DETAIL @ BENCH/DESK BALLISTIC REINFORCEMENT
SCALE: 1'–0" = 1'–0"

Interior Improvements to DC Superior Courts Building 'B'

409 E Street, NW
Washington, DC 20001

U.S. General Services Administration
301 7th Street, SW, Room 2021
Washington, DC 20407

LEO A DALY
PLANNING ARCHITECTURE ENGINEERING INTERIORS
EST. 1906
1201 Connecticut Ave, NW
Washington DC 20036 USA
Tel 202-861-4600 Fax 202-872-8530

Dalco
10005 Old Columbia Road Suite L261
Columbia, MD 21046
Tel: 410-290-8827
Fax: 410-290-8812

Contractor
Address

KEY PLAN

ISSUES / REVISIONS

NO.	DESCRIPTION	DATE

FILE LOG

ACTIVITY	REFERENCE	BY
Manager		
Design		
Draw		
Draw		
Draw		
Check		

REGISTRATION

JOB No 52010300

CONSTRUCTION PACKAGE

ISSUED FOR CONSTRUCTION (FINAL) APRIL 8, 2003

INTERIOR ELEVATIONS AND SECTIONS

A5.22

© Leo A Daly Company 2003

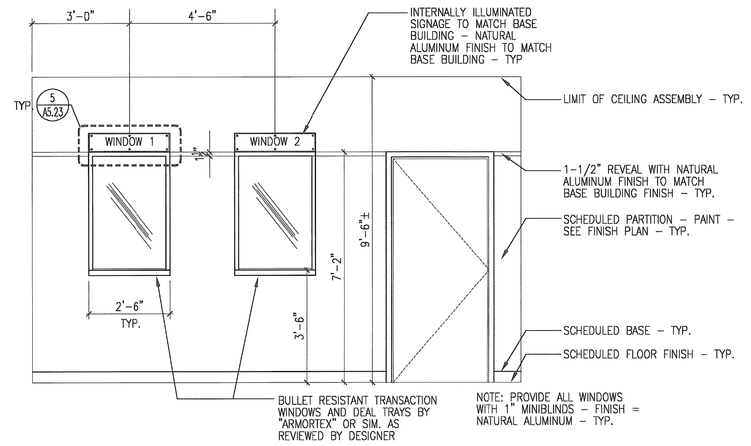

A ROOM #115 – TELLERS – EAST WALL

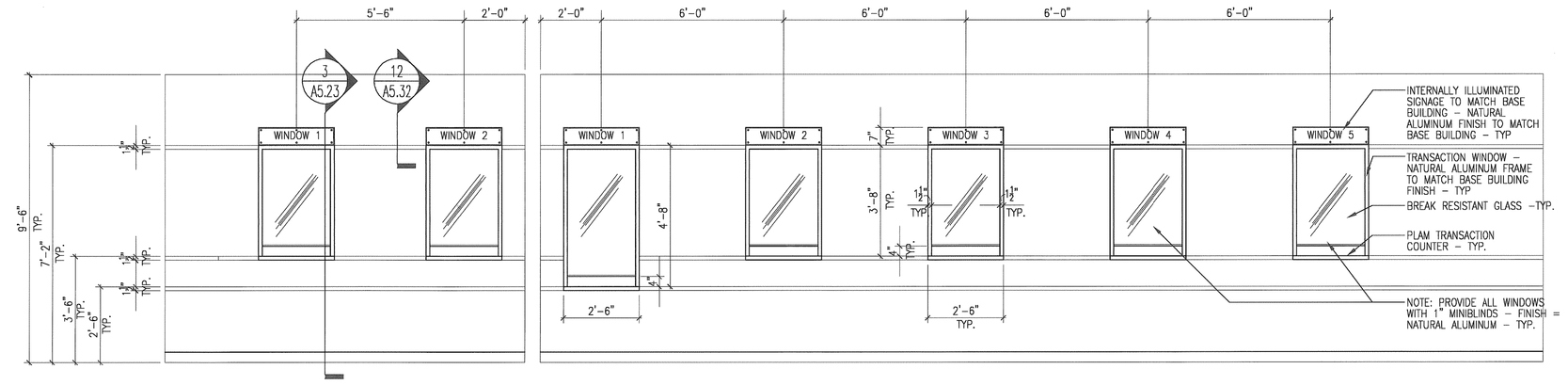

A ROOM #122A – FILE ROOM – WEST WALL

B ROOM #120A – QUEING AREA – WEST WALL

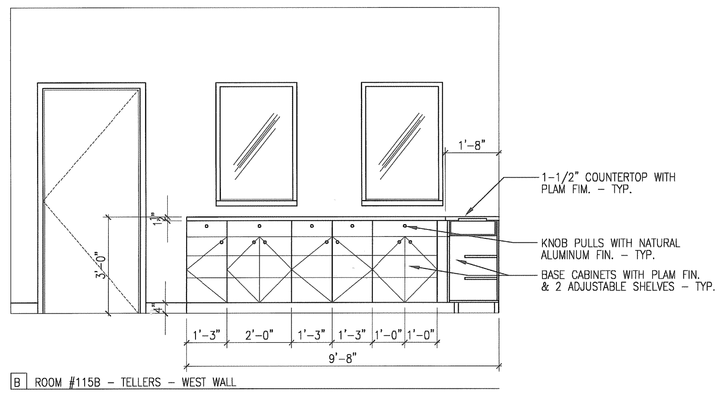

B ROOM #115B – TELLERS – WEST WALL

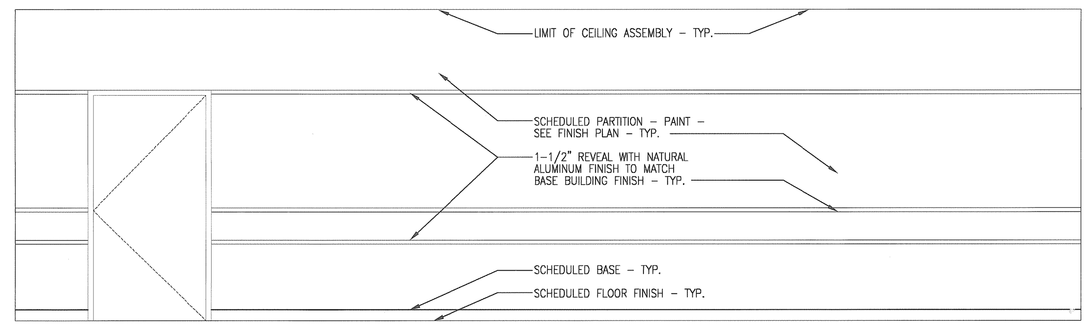

C ROOM #120A – QUEING AREA – EAST WALL

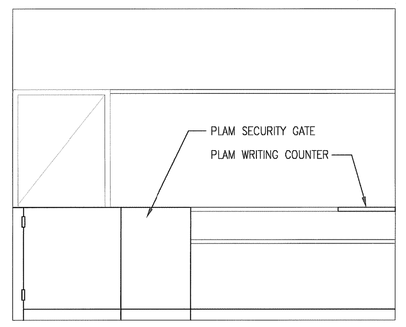

D ROOM #122A – FILE ROOM – EAST WALL

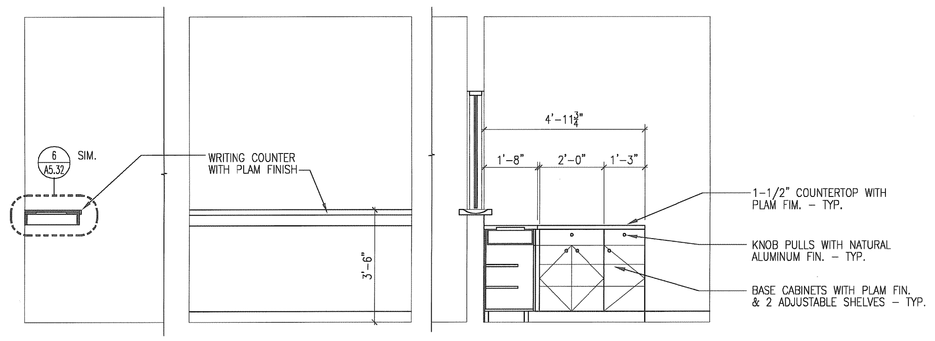

C ROOM #115A – WAITING – EAST WALL & COUNTER SECTION

D ROOM #115B – WAITING – NORTH WALL

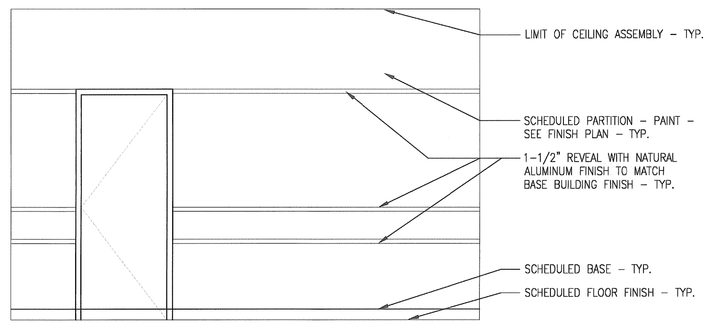

E ROOM #120A – QUEING AREA – NORTH WALL

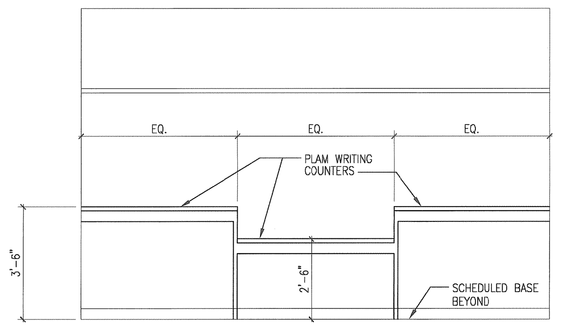

F ROOM #122A – QUEING AREA – SOUTH WALL

NOTE: 1. COUNTERTOP PLAM FINISH = WILSONART #4617-60, "FAIENCE"
2. BASE CABINET PLAM FINISH = WILSONART #09660, "SHADOW"
3. INTERIOR BASE CABINET FINISH = WHITE MELAMINE
4. PROVIDE SHOP DRAWINGS OF COUNTERS, CABINETS, WINDOW AND SIGNBOX ASSEMBLIES FOR REVIEW BY DESIGNER

1 A5.23 INTERIOR ELEVATIONS @ ROOM 115, 115A & 115B

SCALE: 3/8" = 1'-0"

2 A5.23 INTERIOR ELEVATIONS @ ROOM 120A & 122A

SCALE: 3/8" = 1'-0"

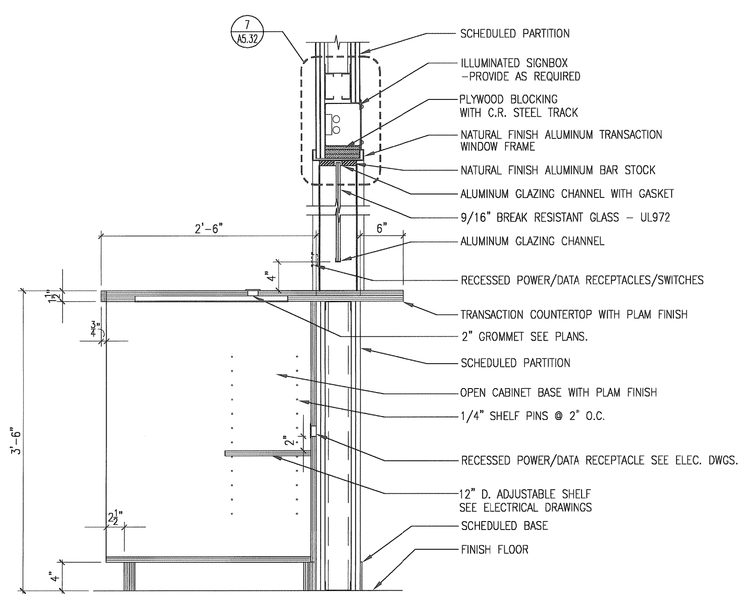

NOTE: 1. COUNTERTOP PLAM FINISH = WILSONART #4617-60, "FAIENCE"
2. BASE CABINET PLAM FINISH = WILSONART #09660, "SHADOW"

3 A5.23 TYPICAL TRANSACTION WINDOW SECTION

SCALE: 1" = 1'-0"

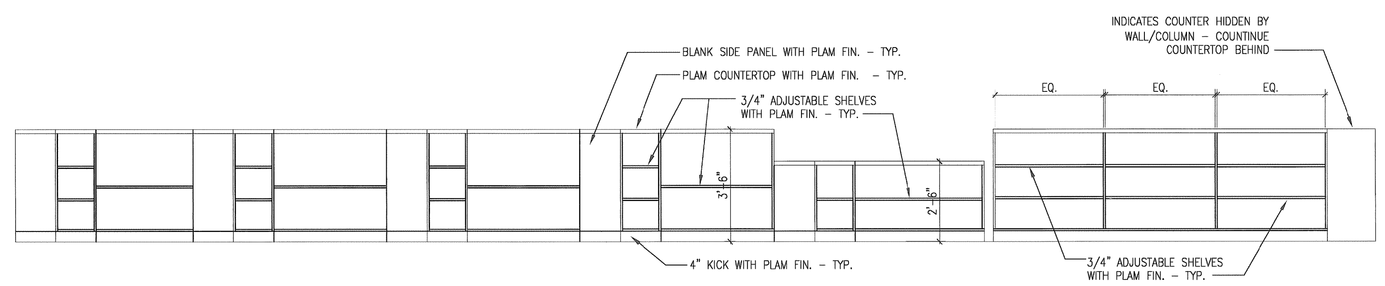

4 A5.23 CABINET ELEVATION @ ROOM 120B

SCALE: 3/8" = 1'-0"

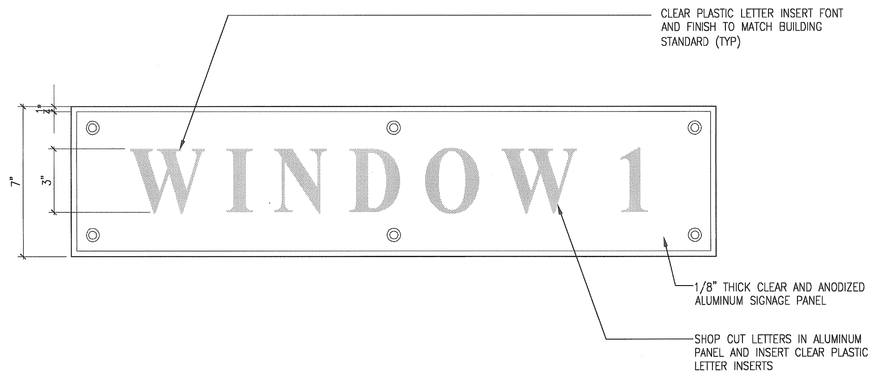

5 A5.23 ENLARGED ILLUMINATED SIGNBOX ELEVATION

SCALE: 3" = 1'-0"

Interior Improvements to DC Superior Courts Building 'B'

409 E Street, NW
Washington, DC 20001

U.S. General Services Administration
301 7th Street, SW, Room 2021
Washington, DC 20407

LEO A DALY
PLANNING ARCHITECTURE ENGINEERING INTERIORS
EST. 1915

1201 Connecticut Ave, NW
Washington DC 20036 USA
Tel 202-861-4600 Fax 202-872-8530

Dalco Architects
10005 Old Columbia Road Suite L261
Columbia, MD 21046
Tel: 410-290-8827
Fax: 410-290-8612

Contractor
Address

KEY PLAN

ISSUES / REVISIONS

NO.	DESCRIPTION	DATE

FILE LOG

ACTIVITY	REFERENCE	BY
Manager		
Design		
Draw		
Draw		
Draw		
Check		

REGISTRATION

JOB No 52010300

CONSTRUCTION PACKAGE

ISSUED FOR CONSTRUCTION (FINAL) APRIL 8, 2003

INTERIOR ELEVATIONS AND SECTIONS

A5.23

© Leo A Daly Company 2003

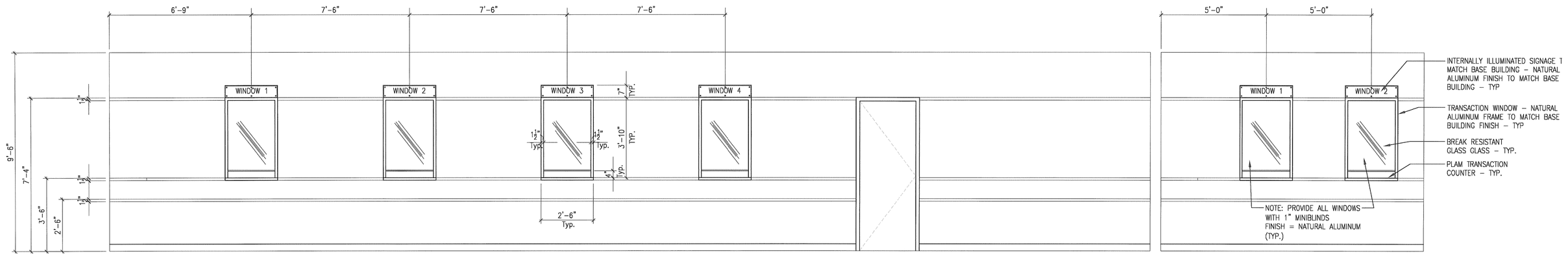

A ROOM #110A – QUEING AREA – WEST WALL

B ROOM #112A – FILE ROOM – WEST WALL

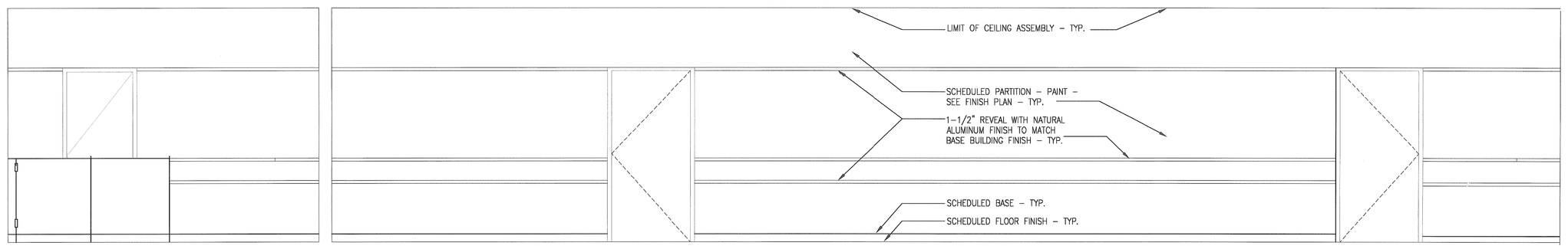

C ROOM #112A – FILE ROOM – EAST WALL

D ROOM #110A – QUEING AREA – EAST WALL

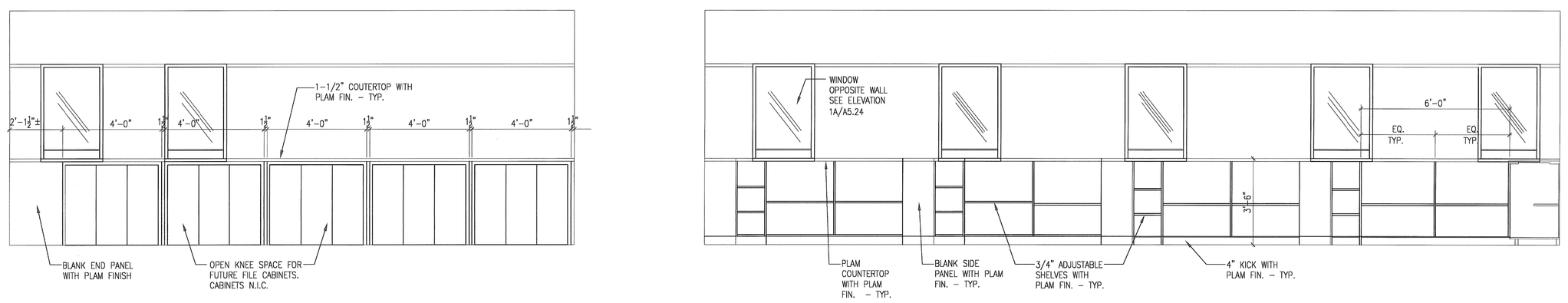

E ROOM #110B – CABINET ELEVATIONS – EAST WALL

1 / A5.24 INTERIOR ELEVATIONS @ ROOM 110A, 110B & 112A

SCALE: 3/8" = 1'-0"

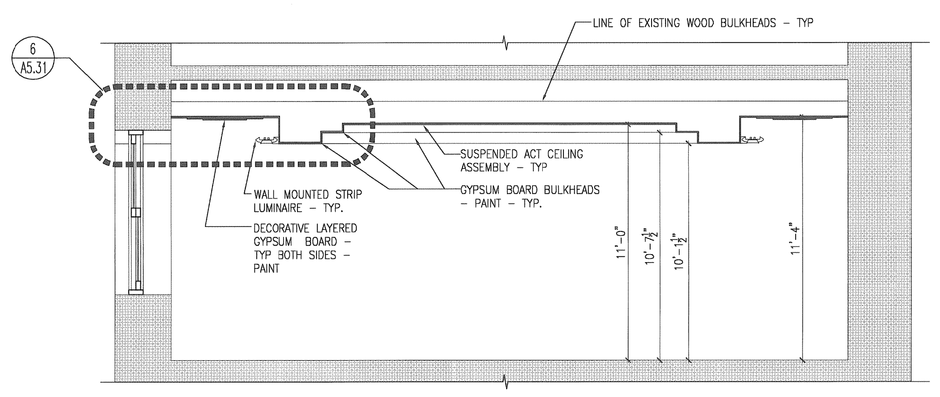

2 / A5.24 TYPICAL COURTROOM SECTION (RM.119A & 109A)

SCALE: 1/4" = 1'-0"

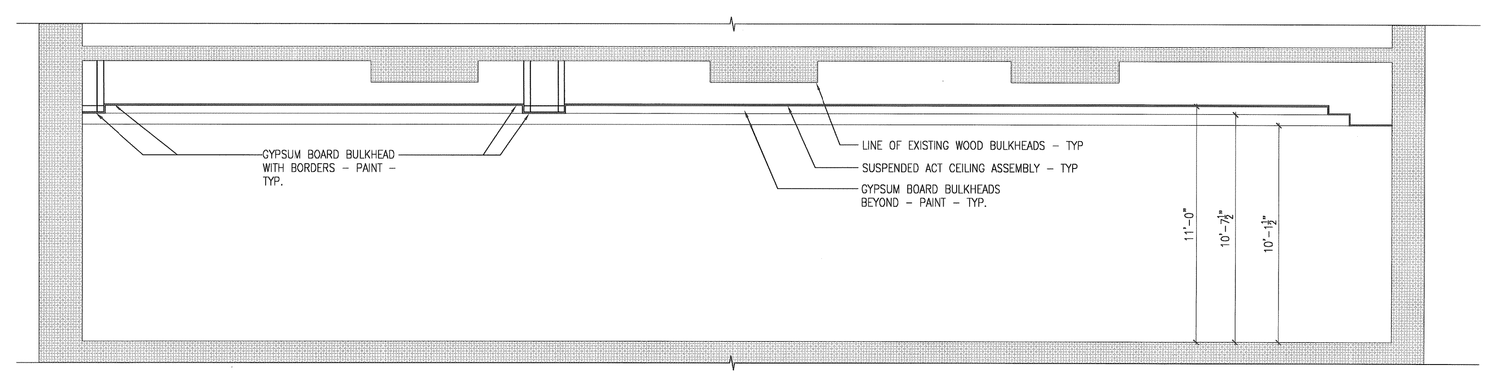

3 / A5.24 SMALL CLAIMS COURT (RM. 119A) SECTION LANDLORD/TENANT COURT (RM.109A)SIM.

SCALE: 1/4" = 1'-0"

Interior Improvements to DC Superior Courts Building 'B'

409 E Street, NW
Washington, DC 20001

U.S. General Services Administration
301 7th Street, SW, Room 2021
Washington, DC 20407

LEO A DALY
PLANNING ARCHITECTURE ENGINEERING INTERIORS
EST. 1915
1201 Connecticut Ave, NW
Washington DC 20036 USA
Tel 202-861-4600 Fax 202-872-8530

Dalco
10005 Old Columbia Road Suite L261
Columbia, MD 21046
Tel: 410-290-8827
Fax: 410-290-8812

Contractor
Address

KEY PLAN

ISSUES / REVISIONS

NO.	DESCRIPTION	DATE

FILE LOG

ACTIVITY	REFERENCE	BY
Manager		
Design		
Draw		
Draw		
Draw		
Check		

REGISTRATION

JOB No 52010300

CONSTRUCTION PACKAGE

ISSUED FOR CONSTRUCTION (FINAL) APRIL 8, 2003

INTERIOR ELEVATIONS AND SECTIONS

A5.24

© Leo A Daly ©

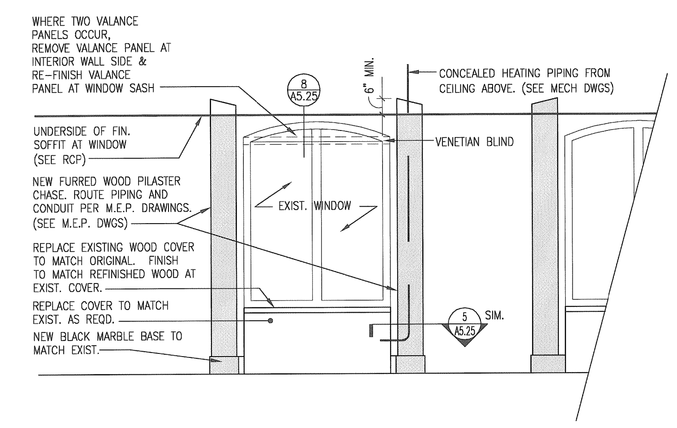

1 A5.25 PARTIAL INTERIOR ELEVATION AT 1ST FLOOR WOOD VENEER WINDOW NICHE CONDITION
SCALE: 1/4" = 1'-0"

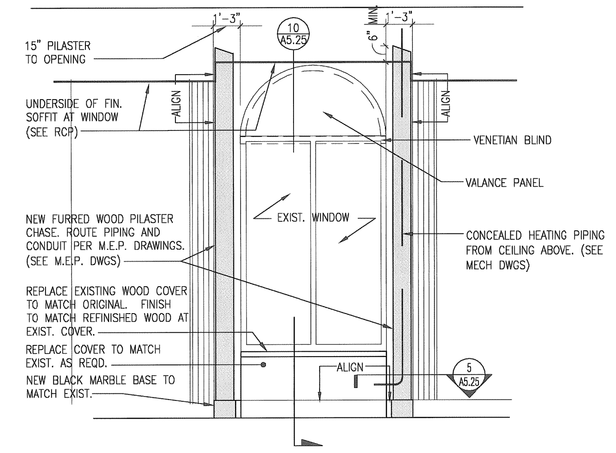

2 A5.25 PARTIAL INTERIOR ELEVATION AT 2ND FLOOR WOOD VENEER WINDOW NICHE CONDITION
SCALE: 1/4" = 1'-0"

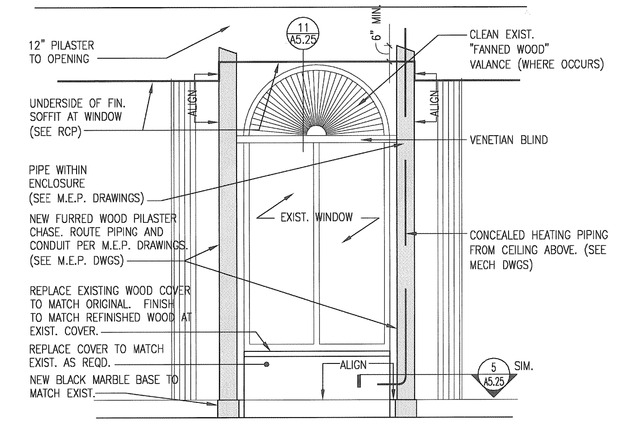

3 A5.25 PARTIAL INTERIOR ELEVATION AT 3RD FLOOR PLASTER WALL WINDOW NICHE CONDITION
SCALE: 1/4" = 1'-0"

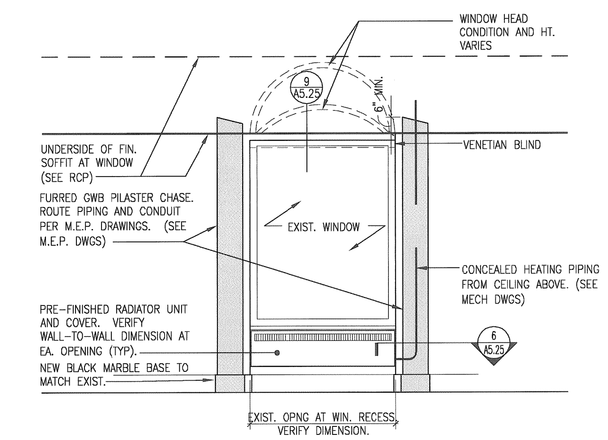

4 A5.25 PARTIAL INTERIOR ELEVATION AT ALL FLOORS PLASTER WALL WINDOW NICHE CONDITION
SCALE: 1/4" = 1'-0"

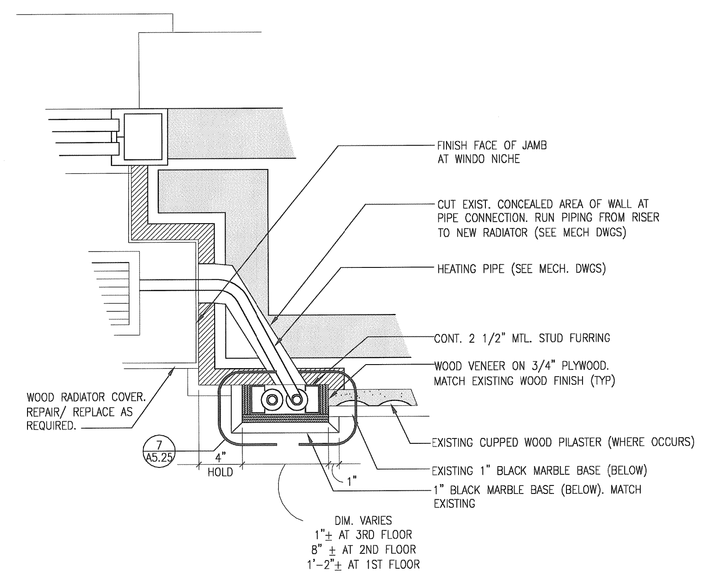

5 A5.25 PLAN DETAIL AT WOOD PANELED PIPE CHASE/PILASTER
SCALE: 1 1/2" = 1'-0"

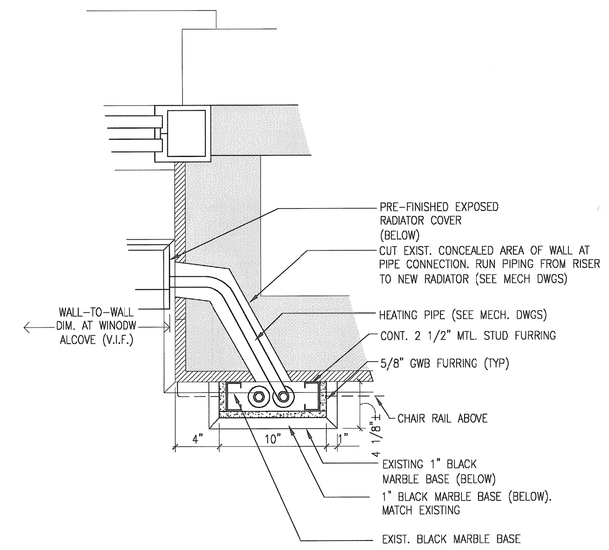

6 A5.25 PLAN DETAIL AT TYP GWB PIPE CHASE/PILASTER
SCALE: 1 1/2" = 1'-0"

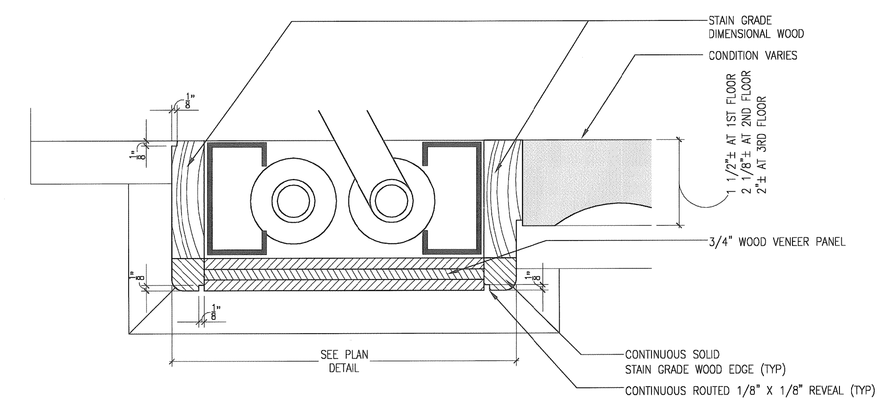

7 A5.25 PLAN DETAIL AT WOOD PANELED PIPE CHASE/PILASTER
SCALE: 6" = 1'-0"

GENERAL NOTES

1. CLEAN, REFURBISH, REUSE EXISTING BRASS GRILLES WHERE POSSIBLE. WHERE RE-USE OF EXISTING IS NOT POSSIBLE, REPLACE WITH NEW TO MATCH EXISTING.
2. MATCH EXISTING WOOD SPECIES AND FINISH.
3. MATCH EXISTING BLACK MARBLE BASE.
4. FIELD VERIFY ALL DIMENSIONS.
5. TAKE CARE NOT TO DISTURB EXISTING PIPING AND INSULATION.

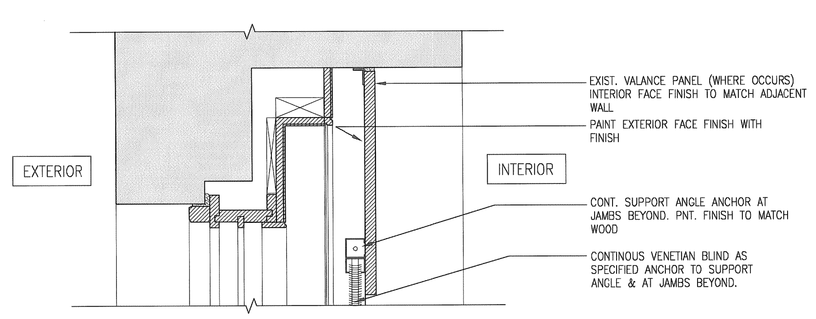

8 A5.25 SECTION DETAIL AT FLAT-ARCHED WINDOW HEAD CONDITION
SCALE: 1 1/2" = 1'-0"

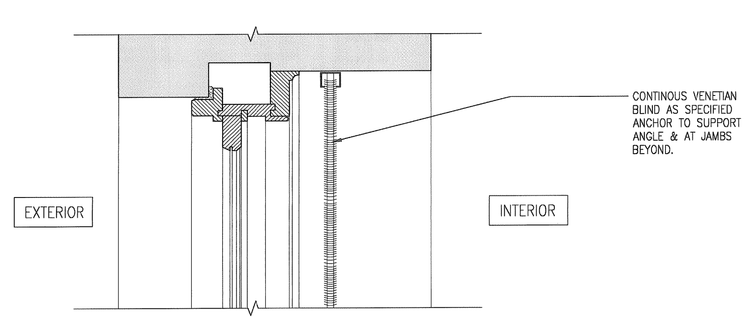

9 A5.25 SECTION DETAIL AT FLAT WINDOW HEAD CONDITION
SCALE: 1 1/2" = 1'-0"

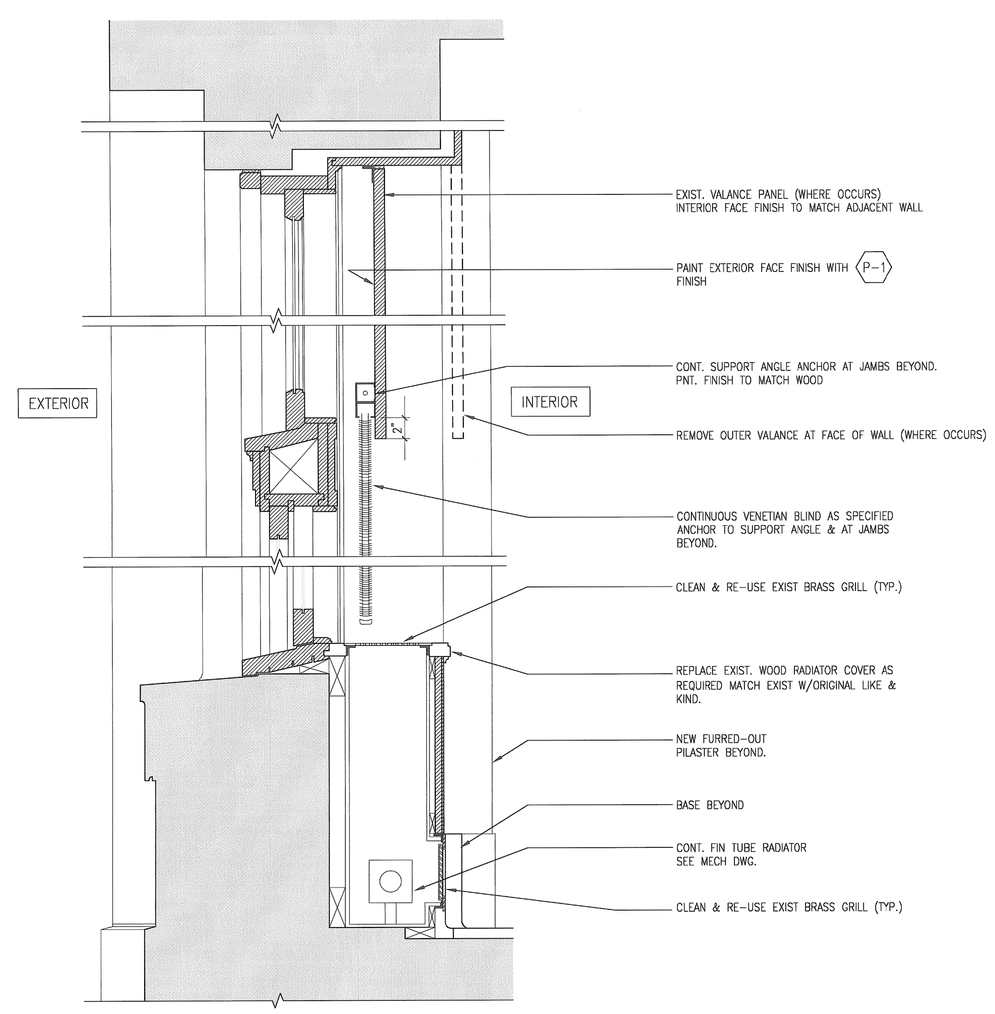

10 A5.25 SECTION DETAIL AT ARCHED WINDOW – WOOD NICHE CONDITION
SCALE: 1 1/2" = 1'-0"

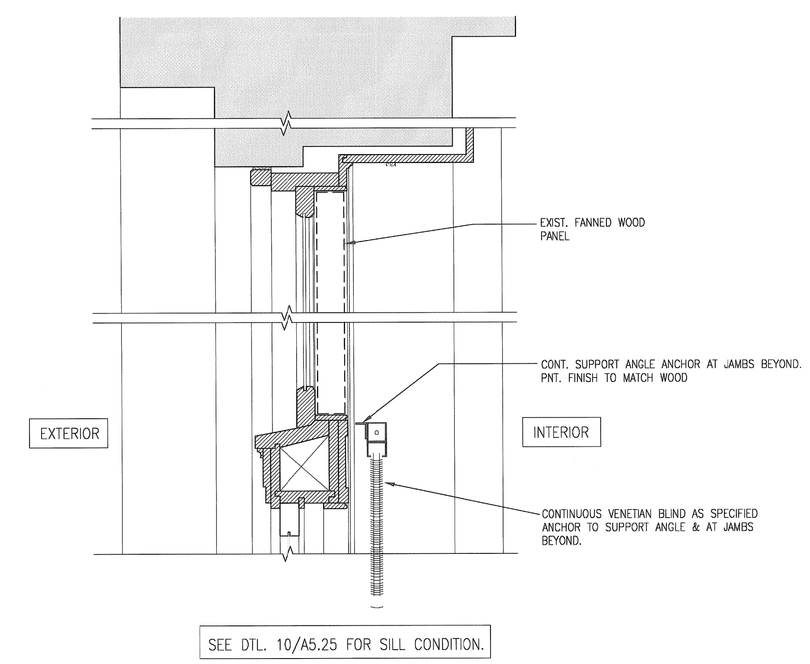

11 A5.25 SECTION DETAIL AT ARCHED WINDOW – 2ND FLR. WOOD VENEER WINDOW NICHE CONDITION
SCALE: 1 1/2" = 1'-0"

Interior Improvements to DC Superior Courts Building 'B'

409 E Street, NW
Washington, DC 20001

U.S. General Services Administration
301 7th Street, SW, Room 2021
Washington, DC 20407

LEO A DALY
PLANNING ARCHITECTURE ENGINEERING INTERIORS
EST. 1915
1201 Connecticut Ave, NW
Washington DC 20036 USA
Tel 202-861-4600 Fax 202-872-8530

Dalco INCORPORATED
10005 Old Columbia Road Suite L261
Columbia, MD 21046
Tel: 410-290-8827
Fax: 410-290-8812

Contractor
Address

KEY PLAN

ISSUES / REVISIONS

NO.	DESCRIPTION	DATE

FILE LOG

ACTIVITY	REFERENCE	BY
Manager		
Design		
Draw		
Draw		
Draw		
Check		

REGISTRATION

JOB No 52010300

CONSTRUCTION PACKAGE

ISSUED FOR CONSTRUCTION (FINAL) APRIL 8, 2003

WINDOW/ RADIATOR CONDITION ELEVATIONS AND DETAILS

A5.25

© Leo A Daly Company 2003

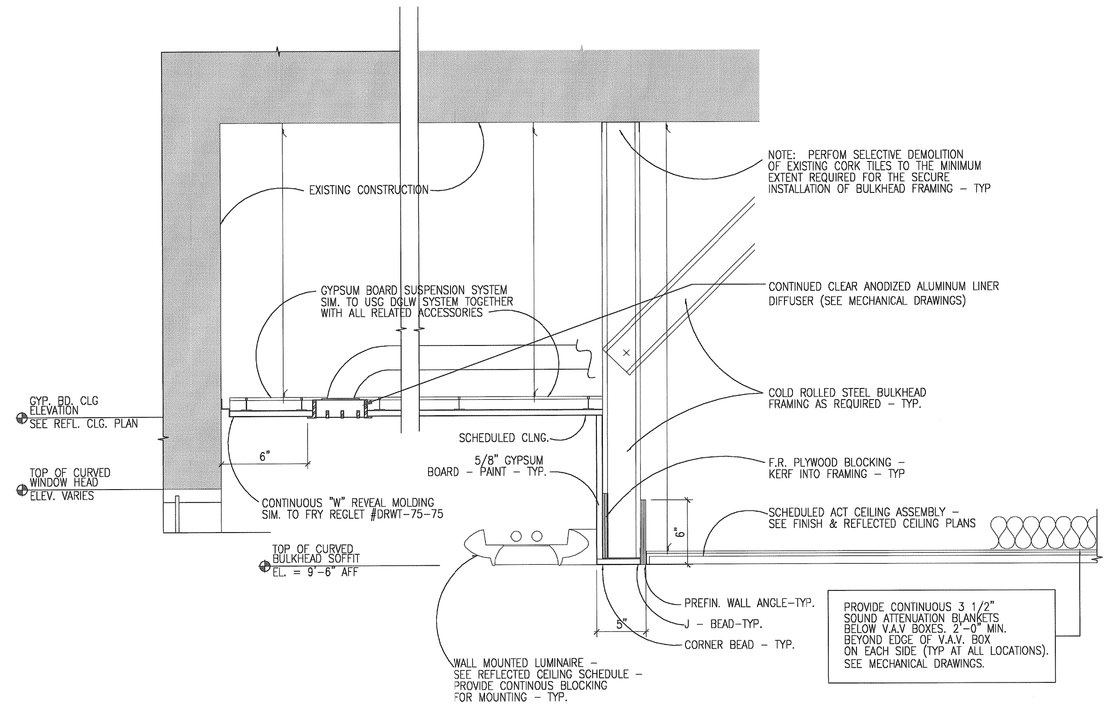

1 / A5.31 SECTION DETAIL AT TYP BULKHEAD (FLAT ARCHED WINDOW CONDITION)
SCALE: 1 1/2" = 1'-0"

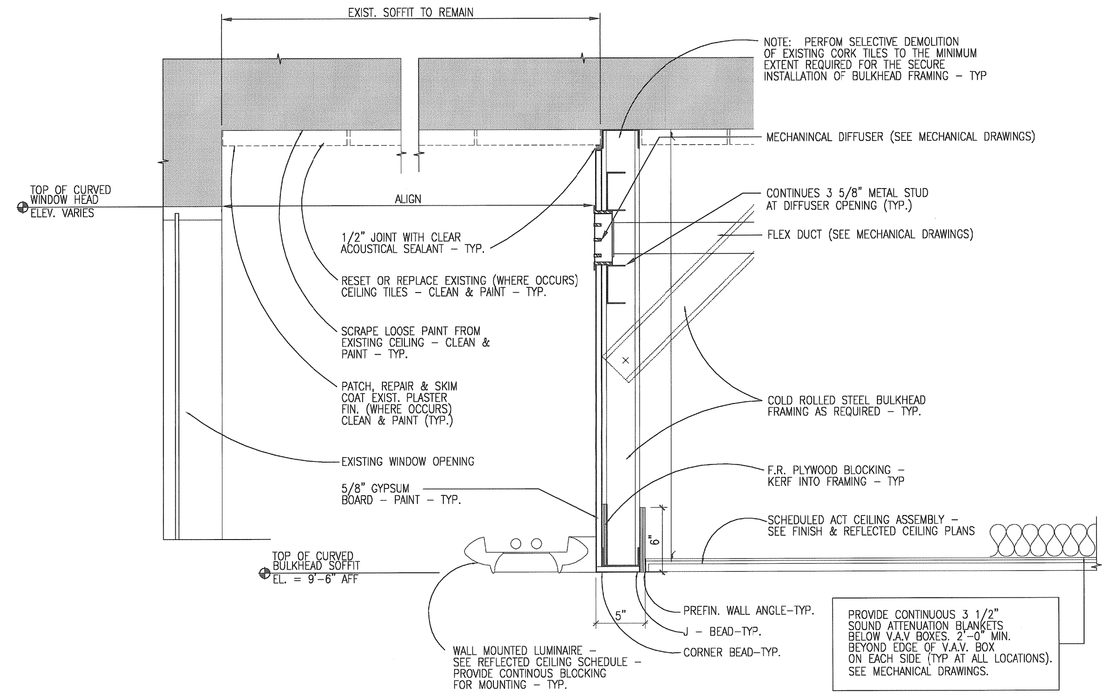

2 / A5.31 SECTION DETAIL AT TYP BULKHEAD CONDITION (EXIST. SOFFIT TO REMAIN – 2ND FLOOR)
SCALE: 1 1/2" = 1'-0"

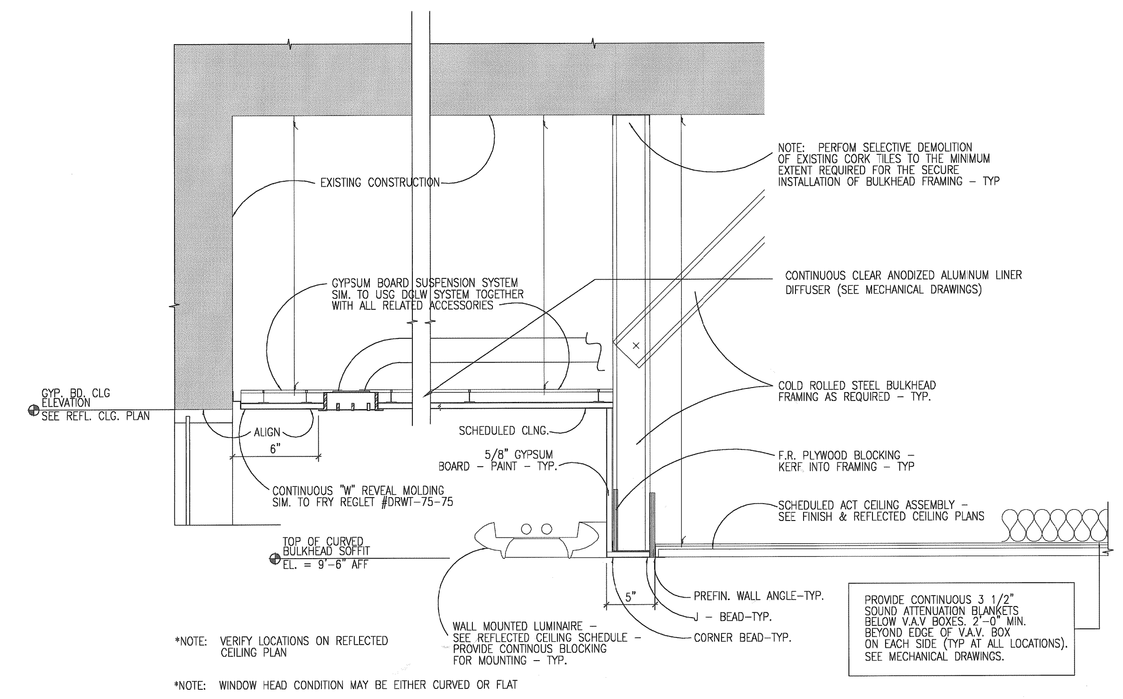

3 / A5.31 SECTION DETAIL AT TYP BULKHEAD (FLAT HEADED WINDOW CONDITION)
SCALE: 1 1/2" = 1'-0"

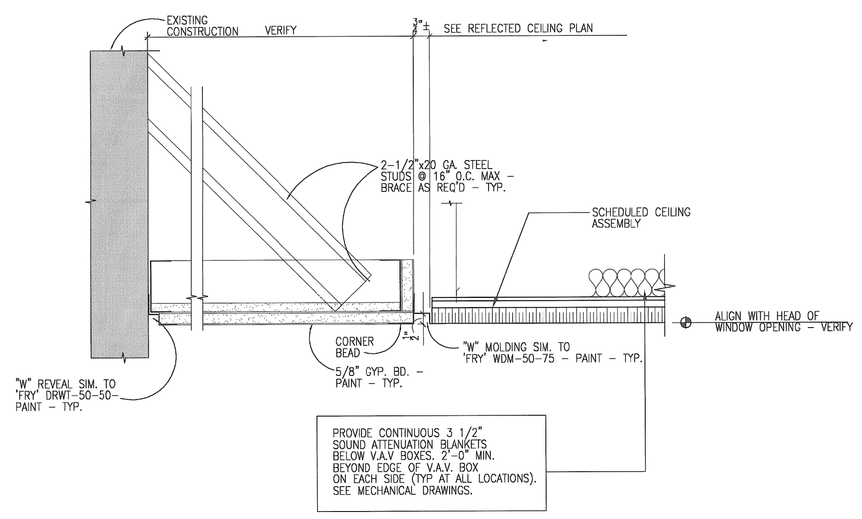

4 / A5.31 SECTION DETAIL AT CEILING SOFFIT BORDER
SCALE: 3" = 1'-0"

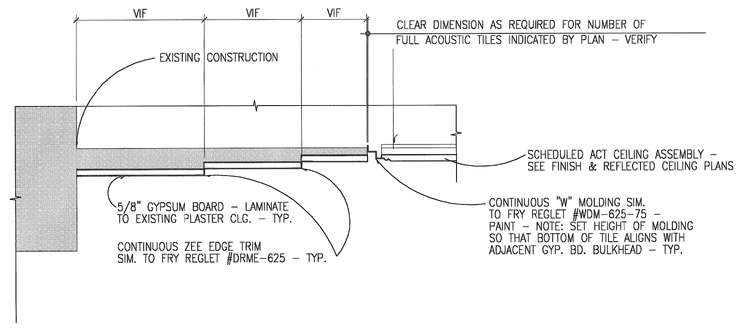

5 / A5.31 TYPICAL CEILING DETAIL SECOND FLOOR CORRIDOR SOFFIT
SCALE: 1-1/2" = 1'-0"

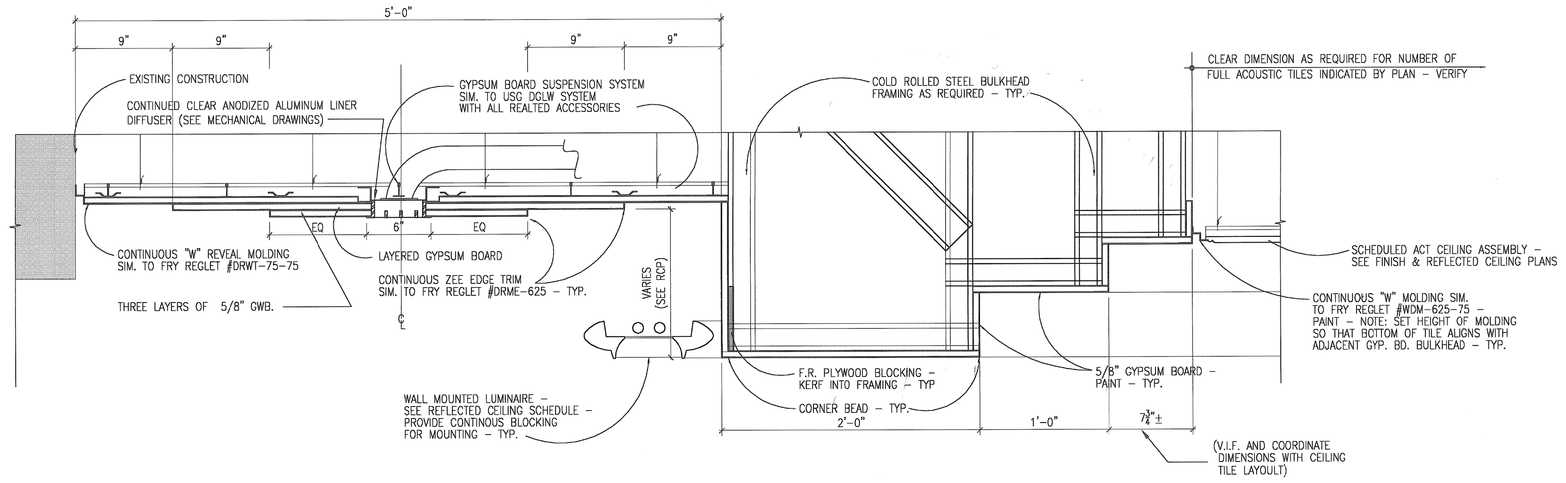

6 / A5.31 TYPICAL CEILING DETAIL FIRST FLOOR –COURTROOMS
SCALE: 1-1/2" = 1'-0"

Interior Improvements to DC Superior Courts Building 'B'

409 E Street, NW
Washington, DC 20001

U.S. General Services Administration
301 7th Street, SW, Room 2021
Washington, DC 20407

LEO A DALY
PLANNING ARCHITECTURE ENGINEERING INTERIORS
EST. 1910
1201 Connecticut Ave, NW
Washington DC 20036 USA
Tel 202-861-4600 Fax 202-872-8530

Dalco INCORPORATED
10005 Old Columbia Road Suite L261
Columbia, MD 21046
Tel: 410-290-8827
Fax: 410-290-8812

Contractor
Address

KEY PLAN

ISSUES / REVISIONS

NO.	DESCRIPTION	DATE

FILE LOG

ACTIVITY	REFERENCE	BY
Manager		
Design		
Draw		
Draw		
Draw		
Check		

REGISTRATION

JOB No 52010300

CONSTRUCTION PACKAGE

ISSUED FOR CONSTRUCTION (FINAL) APRIL 8, 2003

CEILING AND INTERIOR DETAILS

A5.31

© Leo A Daly Company 2003

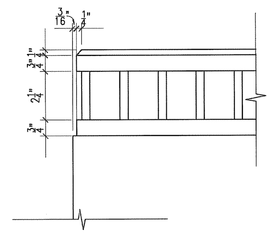

1 / A5.32 ELEVATION DETAIL @ BENCH END CORNER & FRONT RAIL
SCALE: 3" = 1'-0"

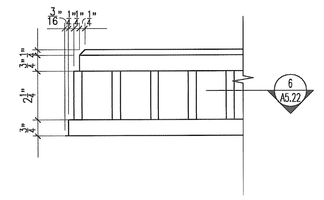

2 / A5.32 ELEVATION DETAIL @ CLERK BENCH CORNER
SCALE: 3" = 1'-0"

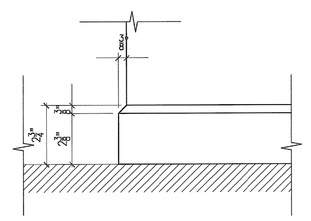

3 / A5.32 ELEVATION DETAIL @ BENCH SIDE BASE
SCALE: 3" = 1'-0"

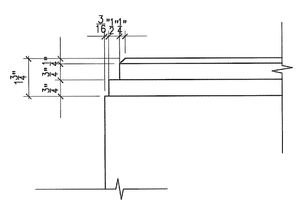

4 / A5.32 ELEVATION DETAIL @ FRONT RAIL CORNER – POST
SCALE: 3" = 1'-0"

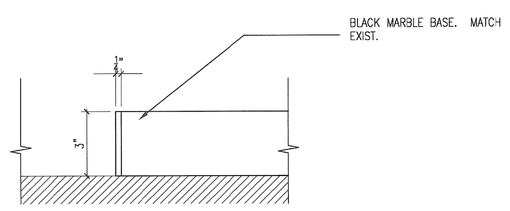

5 / A5.32 ELEVATION DETAIL @ FRONT RAIL BASE
SCALE: 3" = 1'-0"

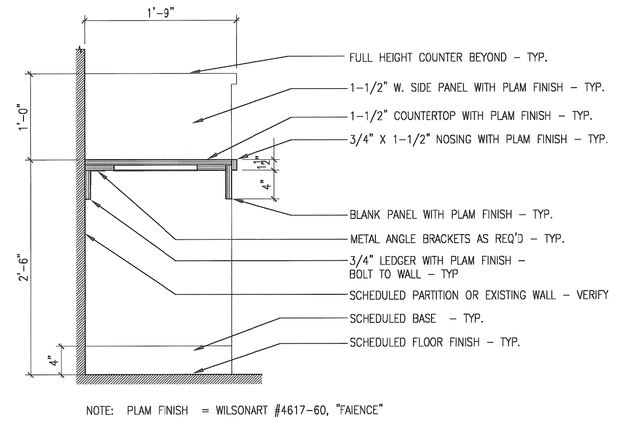

NOTE: PLAM FINISH = WILSONART #4617-60, "FAIENCE"

6 / A5.32 SECTION DETAIL @ TYPICAL WRITING COUNTER
SCALE: 1" = 1'-0"

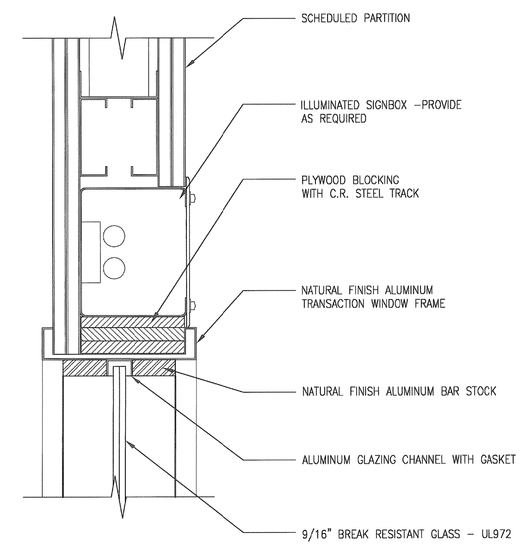

7 / A5.32 SECTION DETAIL @ ILLUMINATED SIGNBOX & WINDOW HEAD
SCALE: 3" = 1'-0"

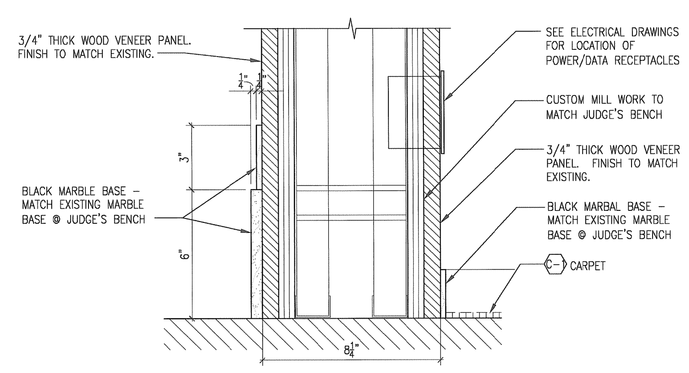

8 / A5.32 SECTION DETAIL @ CLERK'S BENCH – COURTROOM
SCALE: 3" = 1'-0"

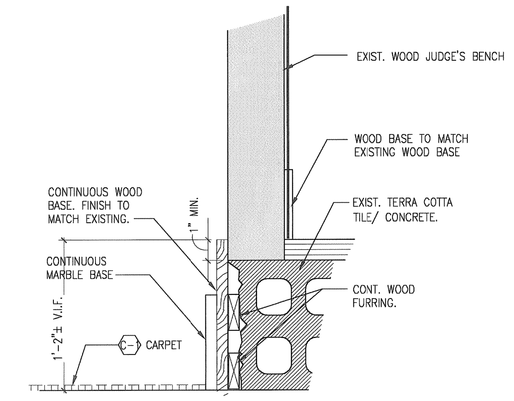

9 / A5.32 SECTION DETAIL @ JUDGE'S BENCH – COURTROOM
SCALE: 3" = 1'-0"

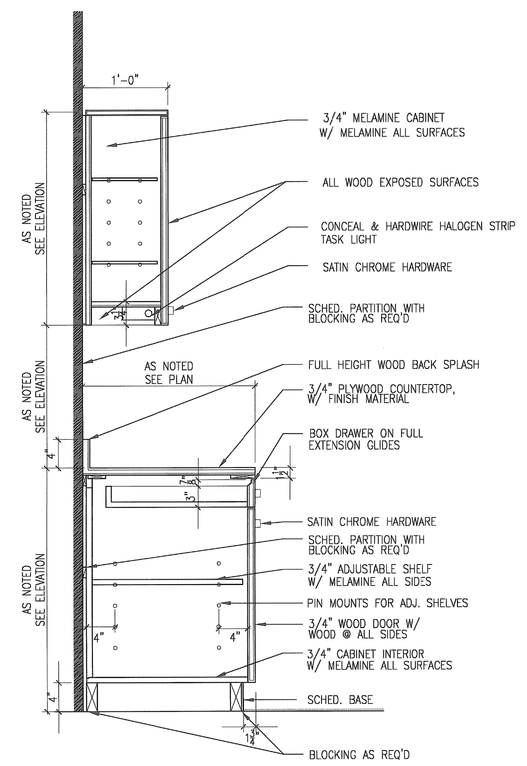

10 / A5.32 SECTION DETAIL @ KITCHENETTE COUNTER
SCALE: 1" = 1'-0"

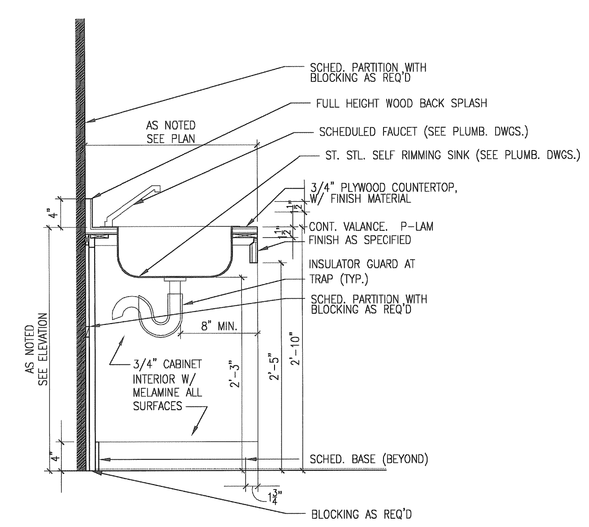

11 / A5.32 SECTION DETAIL @ KITCHENETTE SINK (ADA)
SCALE: 1" = 1'-0"

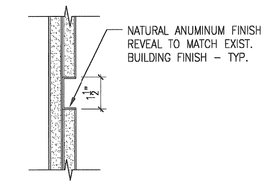

12 / A5.32 PLAN/SECTION DETAIL AT REVEAL
SCALE: 3" = 1'-0"

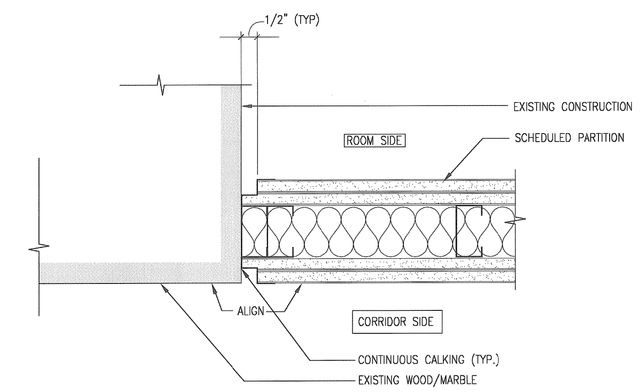

13 / A5.32 PLAN DETAIL @ REVEAL BETWEEN GWB AND EXISTING MATL.
SCALE: 3" = 1'-0"

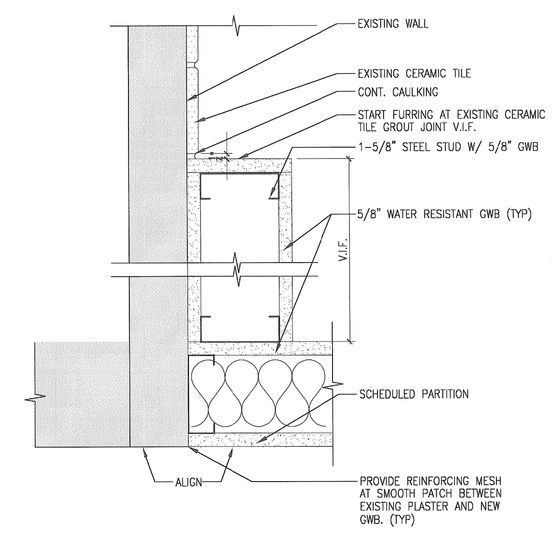

14 / A5.32 PLAN DETAIL @ PARTITION INFILL IN TOILET ROOM
SCALE: 3" = 1'-0"

Interior Improvements to DC Superior Courts Building 'B'

409 E Street, NW
Washington, DC 20001

U.S. General Services Administration
301 7th Street, SW, Room 2021
Washington, DC 20407

LEO A DALY
PLANNING ARCHITECTURE ENGINEERING INTERIORS
EST. 1915
1201 Connecticut Ave, NW
Washington DC 20036 USA
Tel 202-861-4600 Fax 202-872-8530

Dalco Incorporated
10005 Old Columbia Road Suite L261
Columbia, MD 21046
Tel: 410-290-8827
Fax: 410-290-8812

Contractor
Address

KEY PLAN

ISSUES / REVISIONS

NO.	DESCRIPTION	DATE

FILE LOG

ACTIVITY	REFERENCE	BY
Manager		
Design		
Draw		
Draw		
Draw		
Check		

REGISTRATION

JOB No 52010300

CONSTRUCTION PACKAGE

ISSUED FOR CONSTRUCTION (FINAL) APRIL 8, 2003

INTERIOR DETAILS

A5.32

© Leo A Daly Company 2003

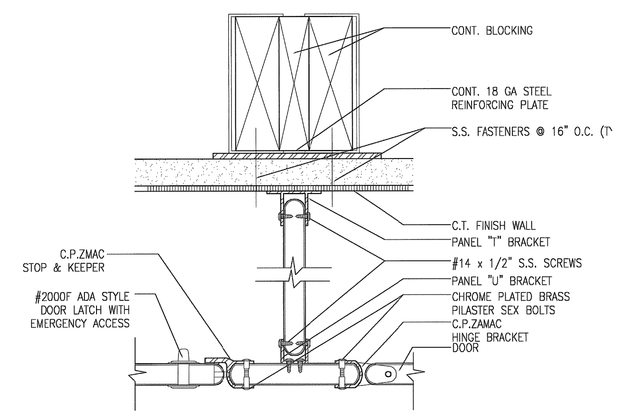

1 A5.33 PLAN DETAIL AT TOILET PARTITION
SCALE: NO SCALE

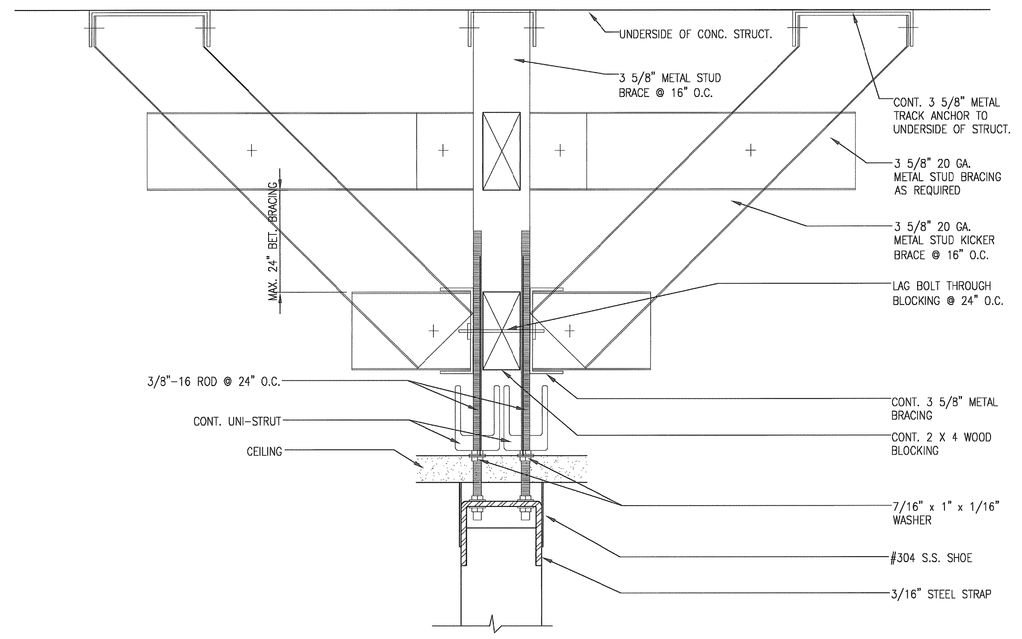

2 A5.33 SECTION DETAIL AT TOILET PARTITION CEILING ANCHORAGE
SCALE: NO SCALE

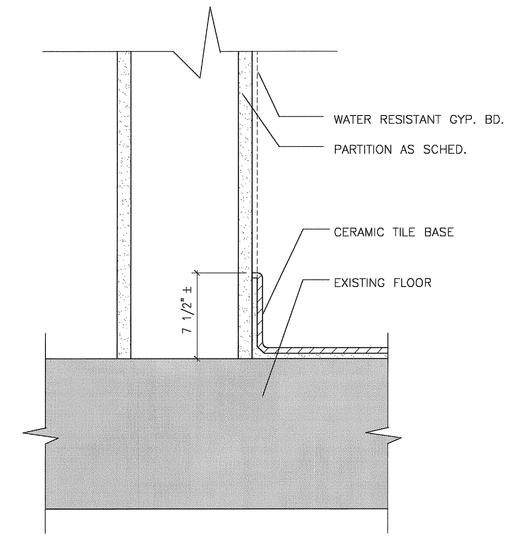

3 A5.33 TYP. FLOOR BASE DETAIL
SCALE: 3" = 1'-0"

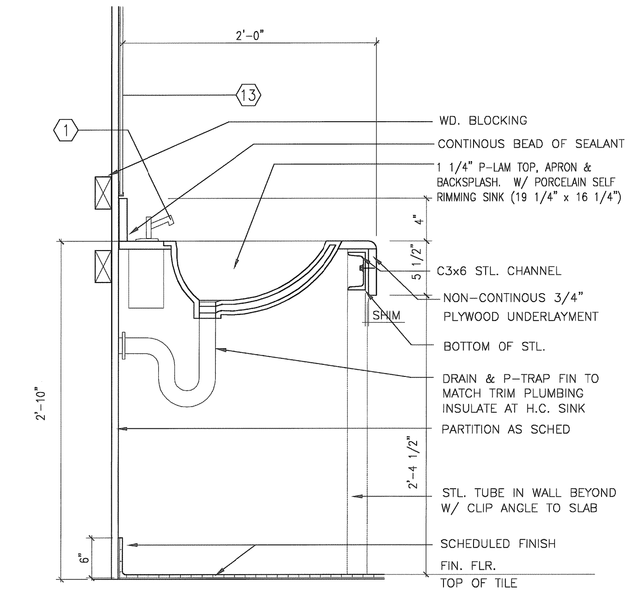

4 A5.33 TYP. SINK SECTION DETAIL
SCALE: 1-1/2" = 1'-0"

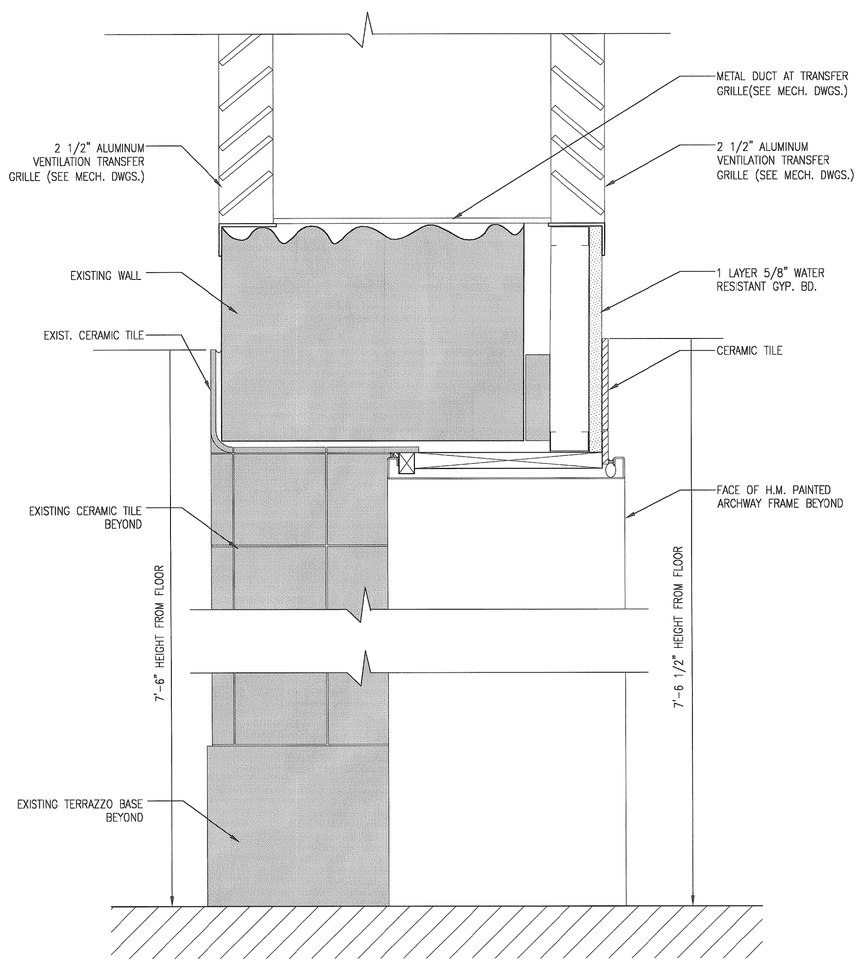

5 A5.33 SECTION DETAIL @ EXIST. TOILET RM. DOOR ARCHWAY
SCALE: 3" = 1'-0"

Interior Improvements to DC Superior Courts Building 'B'

409 E Street, NW
Washington, DC 20001

GSA U.S. General Services Administration
301 7th Street, SW, Room 2021
Washington, DC 20407

LEO A DALY PLANNING ARCHITECTURE ENGINEERING INTERIORS EST. 1915
1201 Connecticut Ave, NW
Washington DC 20036 USA
Tel 202-861-4600 Fax 202-872-8530

Dalco INCORPORATED
10005 Old Columbia Road Suite L261
Columbia, MD 21046
Tel: 410-290-8827
Fax: 410-290-8812

Contractor
Address

KEY PLAN

ISSUES / REVISIONS

NO.	DESCRIPTION	DATE

FILE LOG

ACTIVITY	REFERENCE	BY
Manager		
Design		
Draw		
Draw		
Draw		
Check		

REGISTRATION

JOB No 52010300

CONSTRUCTION PACKAGE

ISSUED FOR CONSTRUCTION (FINAL) APRIL 8, 2003

TOILET DETAILS

A5.33

© Leo A Daly Company 2003

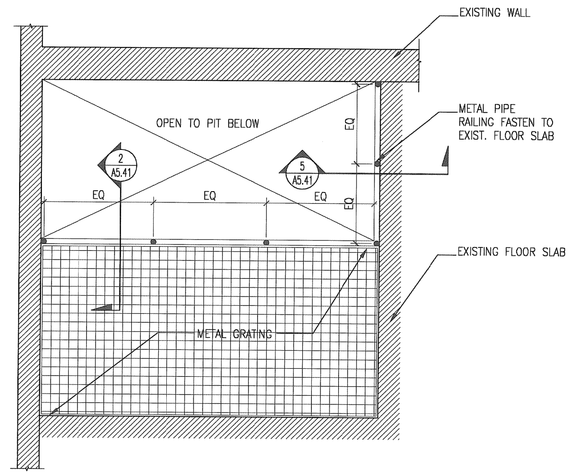

1 A5.41 METAL GRATING PLAN DETAIL @ BASEMENT
SCALE: 1/2" = 1'-0"

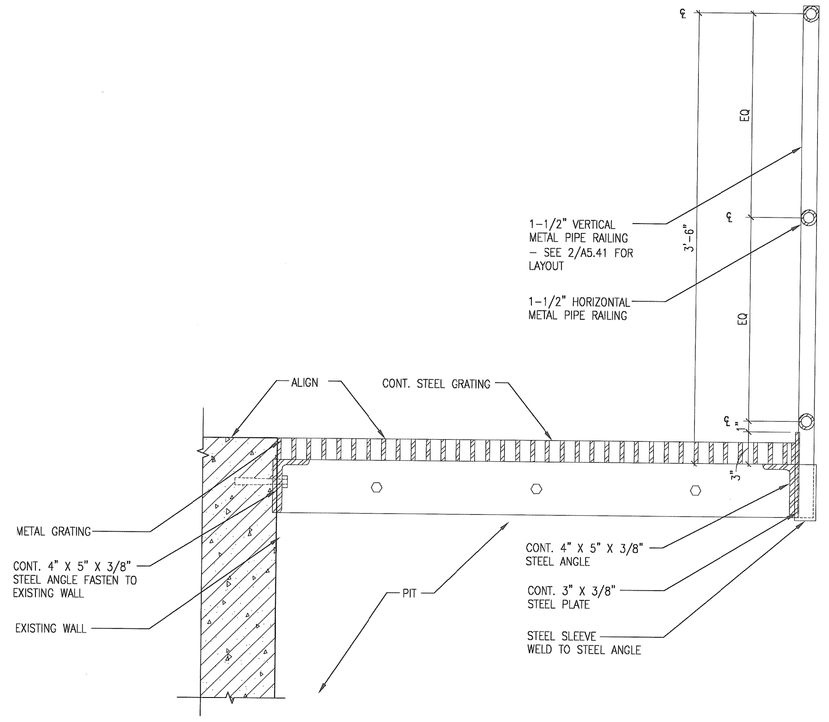

2 A5.41 METAL GRATING SECTION DETAIL @ BASEMENT
SCALE: 1/2" = 1'-0"

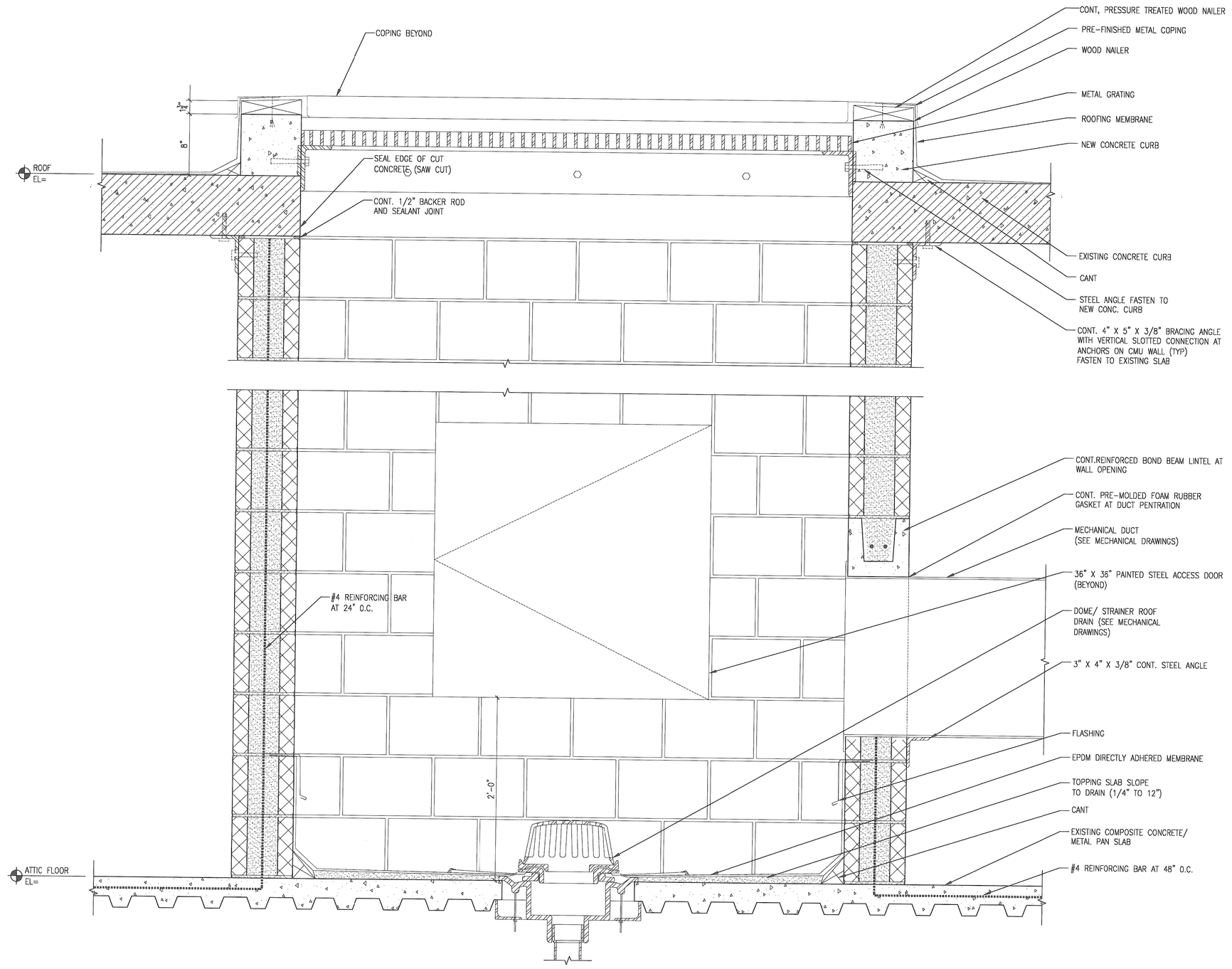

3 A5.41 SECTION DETAIL @ ATTIC FRESH AIR INTAKE ENCLOSURE
SCALE: 1-1/2" = 1'-0"

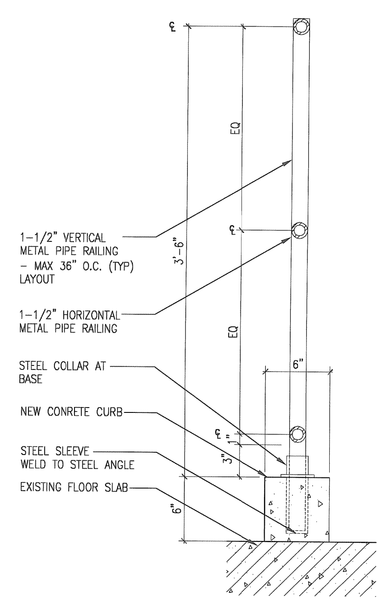

4 A5.41 METAL PIPE RAILING DETAIL AT ATTIC
SCALE: 1-1/2" = 1'-0"

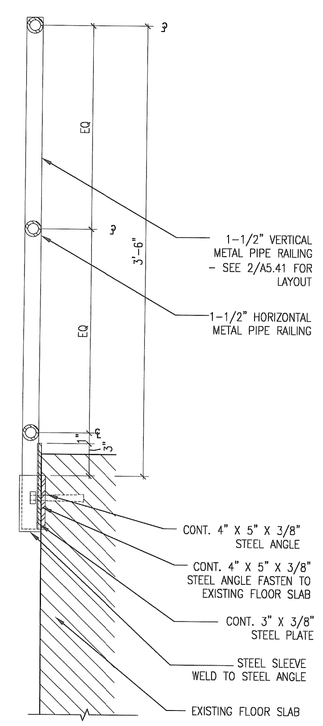

5 A5.41 METAL PIPE RAILING DETAIL @ BASEMENT
SCALE: 1/2" = 1'-0"

Interior Improvements to
DC Superior Courts
Building 'B'

409 E Street, NW
Washington, DC 20001

U.S. General Services Administration
301 7th Street, SW, Room 2021
Washington, DC 20407

LEO A DALY
PLANNING ARCHITECTURE ENGINEERING INTERIORS
EST. 1915
1201 Connecticut Ave, NW
Washington DC 20036 USA
Tel 202-861-4600 Fax 202-872-8530

Dalco INCORPORATED
10005 Old Columbia Road Suite L261
Columbia, MD 21046
Tel: 410-290-8827
Fax: 410-290-8812

Contractor
Address

KEY PLAN

ISSUES / REVISIONS

NO.	DESCRIPTION	DATE

FILE LOG

ACTIVITY	REFERENCE	BY
Manager		
Design		
Draw		
Draw		
Draw		
Check		

REGISTRATION

JOB No 52010300

CONSTRUCTION PACKAGE

ISSUED FOR CONSTRUCTION (FINAL) APRIL 8, 2003

BASEMENT, ATTIC AND ROOF DETAILS

A5.41

© Leo A Daly Company 2003

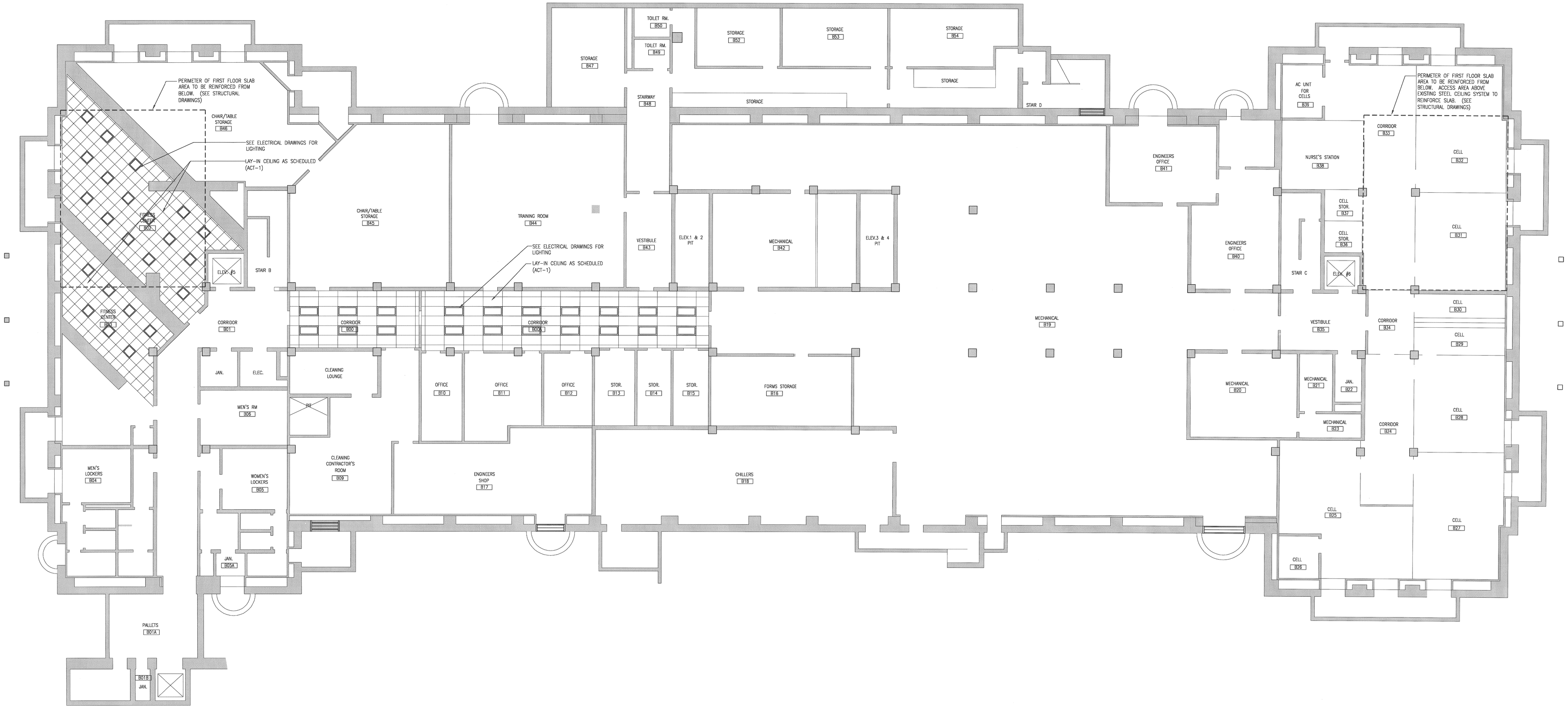

1 / A6.00 BASEMENT REFLECTED CEILING PLAN
SCALE: 1/8" = 1'-0"

Interior Improvements to DC Superior Courts Building 'B'

409 E Street, NW
Washington, DC 20001

U.S. General Services Administration
301 7th Street, SW, Room 2021
Washington, DC 20407

LEO A DALY
PLANNING ARCHITECTURE ENGINEERING INTERIORS
EST. 1915
1201 Connecticut Ave, NW
Washington DC 20036 USA
Tel 202-861-4600 Fax 202-872-8530

Dalco INCORPORATED
10005 Old Columbia Road Suite L261
Columbia, MD 21046
Tel: 410-290-8827
Fax: 410-290-8812

Contractor
Address

KEY PLAN

ISSUES / REVISIONS

NO.	DESCRIPTION	DATE

FILE LOG

ACTIVITY	REFERENCE	BY
Manager		
Design		
Draw		
Draw		
Draw		
Check		

REGISTRATION

JOB No 52010300

CONSTRUCTION PACKAGE

ISSUED FOR CONSTRUCTION (FINAL) APRIL 8, 2003

BASEMENT FLOOR REFLECTED CEILING PLAN

A6.00

© Leo A Daly Company 2003

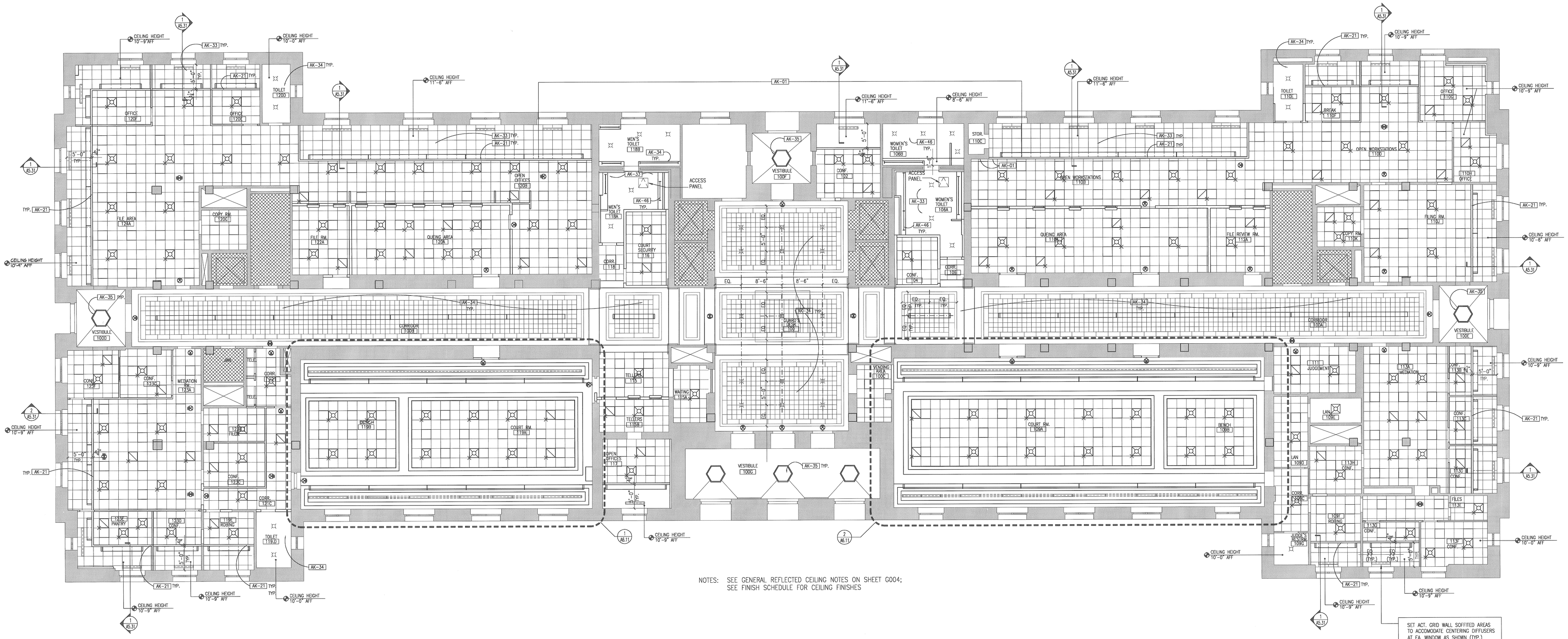

NOTES: SEE GENERAL REFLECTED CEILING NOTES ON SHEET G004;
SEE FINISH SCHEDULE FOR CEILING FINISHES

SET ACT. GRID WALL SOFFITED AREAS TO ACCOMODATE CENTERING DIFFUSERS AT EA. WINDOW AS SHOWN (TYP.) SET GRID START POINT AS SHOWN IN EA. SOFFIT (TYP.) POINT

1 / A6.01 FIRST FLOOR RCP
SCALE: 1/8" = 1'-0"

Interior Improvements to DC Superior Courts Building 'B'

409 E Street, NW
Washington, DC 20001

U.S. General Services Administration
301 7th Street, SW, Room 2021
Washington, DC 20407

LEO A DALY
PLANNING ARCHITECTURE ENGINEERING INTERIORS
EST. 1915
1201 Connecticut Ave, NW
Washington DC 20036 USA
Tel 202-861-4600 Fax 202-872-8530

Dalco INCORPORATED
10005 Old Columbia Road Suite L261
Columbia, MD 21046
Tel: 410-290-8827
Fax: 410-290-8812

Contractor
Address

KEY PLAN

ISSUES / REVISIONS

NO.	DESCRIPTION	DATE

FILE LOG

ACTIVITY	REFERENCE	BY
Manager		
Design		
Draw		
Draw		
Draw		
Check		

REGISTRATION

JOB No 52010300

CONSTRUCTION PACKAGE

ISSUED FOR CONSTRUCTION (FINAL) APRIL 8, 2003

FIRST FLOOR REFLECTED CEILING PLAN

A6.01

© Leo A Daly Company 2003

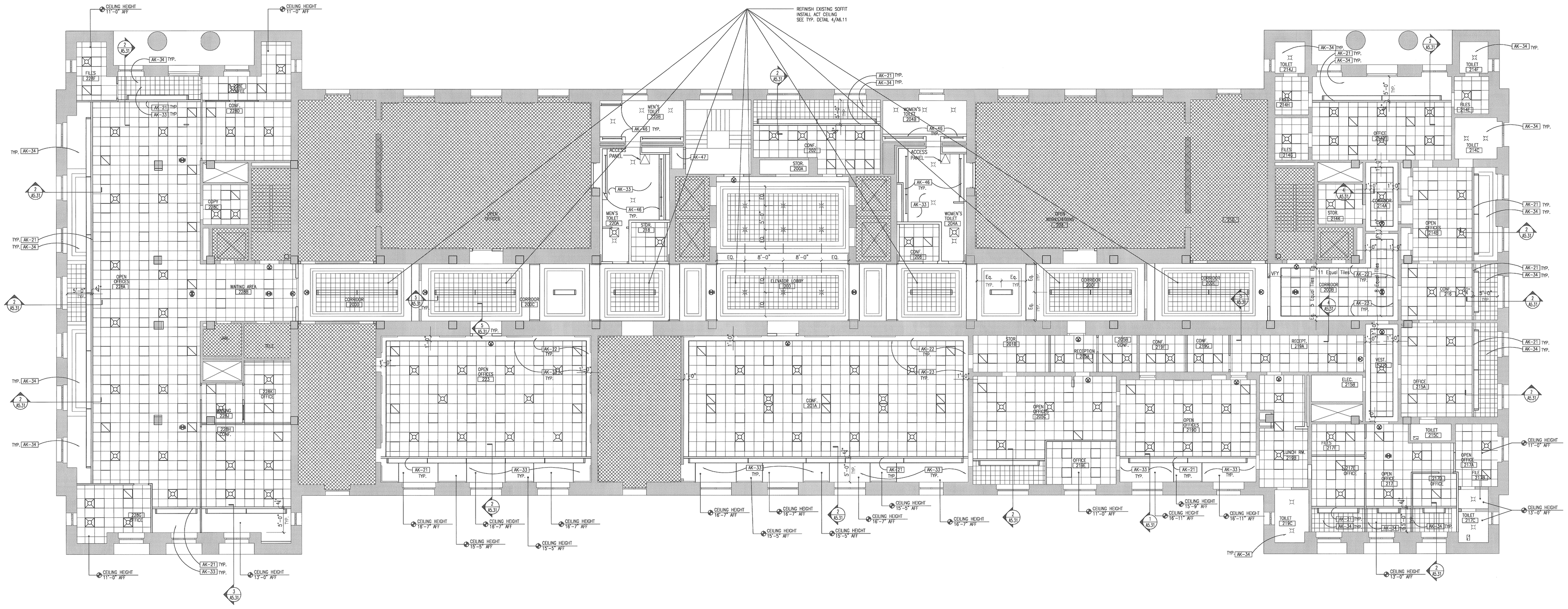

1 A6.02 SECOND FLOOR RCP
SCALE: 1/8" = 1'-0"

NOTES: 1. SEE GENERAL REFLECTED CEILING NOTES ON SHEET G004; SEE FINISH SCHEDULE FOR CEILING FINISHES
2. IN ROOMS 223, 201A, & 219D WHERE CEILING HIEGHTS ARE CALLED OUT, WRAP EXISTING BULKHEAD WITH GYPSUM BOARD AS CLOSE AS POSSIBLE

Interior Improvements to DC Superior Courts Building 'B'

409 E Street, NW
Washington, DC 20001

U.S. General Services Administration
301 7th Street, SW, Room 2021
Washington, DC 20407

LEO A DALY
PLANNING ARCHITECTURE ENGINEERING INTERIORS
EST. 1915
1201 Connecticut Ave, NW
Washington DC 20036 USA
Tel 202-861-4600 Fax 202-872-8530

Dalco
10005 Old Columbia Road Suite L261
Columbia, MD 21046
Tel: 410-290-8827
Fax: 410-290-8612

Contractor
Address

KEY PLAN

ISSUES / REVISIONS

NO.	DESCRIPTION	DATE

FILE LOG

ACTIVITY	REFFERENCE	BY
Manager		
Design		
Draw		
Draw		
Draw		
Check		

REGISTRATION

JOB No 52010300

CONSTRUCTION PACKAGE

ISSUED FOR CONSTRUCTION (FINAL) APRIL 8, 2003

SECOND FLOOR
REFLECTED CEILING PLAN

A6.02

© Leo A Daly Company 2003

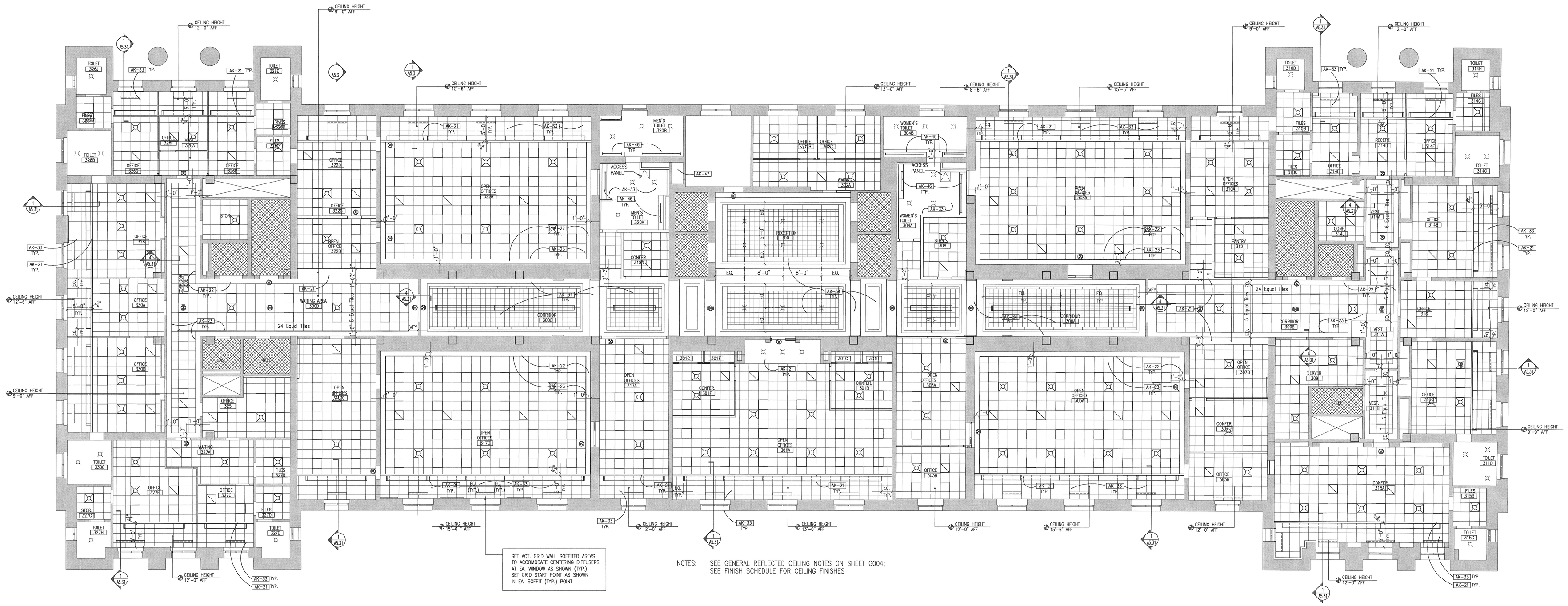

NOTES: SEE GENERAL REFLECTED CEILING NOTES ON SHEET G004;
SEE FINISH SCHEDULE FOR CEILING FINISHES

1 / A6.03 THIRD FLOOR RCP
SCALE: 1/8" = 1'-0"

Interior Improvements to DC Superior Courts Building 'B'

409 E Street, NW
Washington, DC 20001

GSA U.S. General Services Administration
301 7th Street, SW, Room 2021
Washington, DC 20407

LEO A DALY PLANNING ARCHITECTURE ENGINEERING INTERIORS EST. 1915
1201 Connecticut Ave, NW
Washington DC 20036 USA
Tel 202-861-4600 Fax 202-872-8530

Dalco INCORPORATED
10005 Old Columbia Road Suite L261
Columbia, MD 21046
Tel: 410-290-8827
Fax: 410-290-8812

Contractor
Address

KEY PLAN

ISSUES / REVISIONS

NO.	DESCRIPTION	DATE

FILE LOG

ACTIVITY	REFERENCE	BY
Manager		
Design		
Drafter		
Drafter		
Drafter		
Check		

REGISTRATION

JOB No 52010300

CONSTRUCTION PACKAGE

ISSUED FOR CONSTRUCTION (FINAL) APRIL 8, 2003

THIRD FLOOR REFLECTED CEILING PLAN

A6.03

© Leo A Daly Company 2003

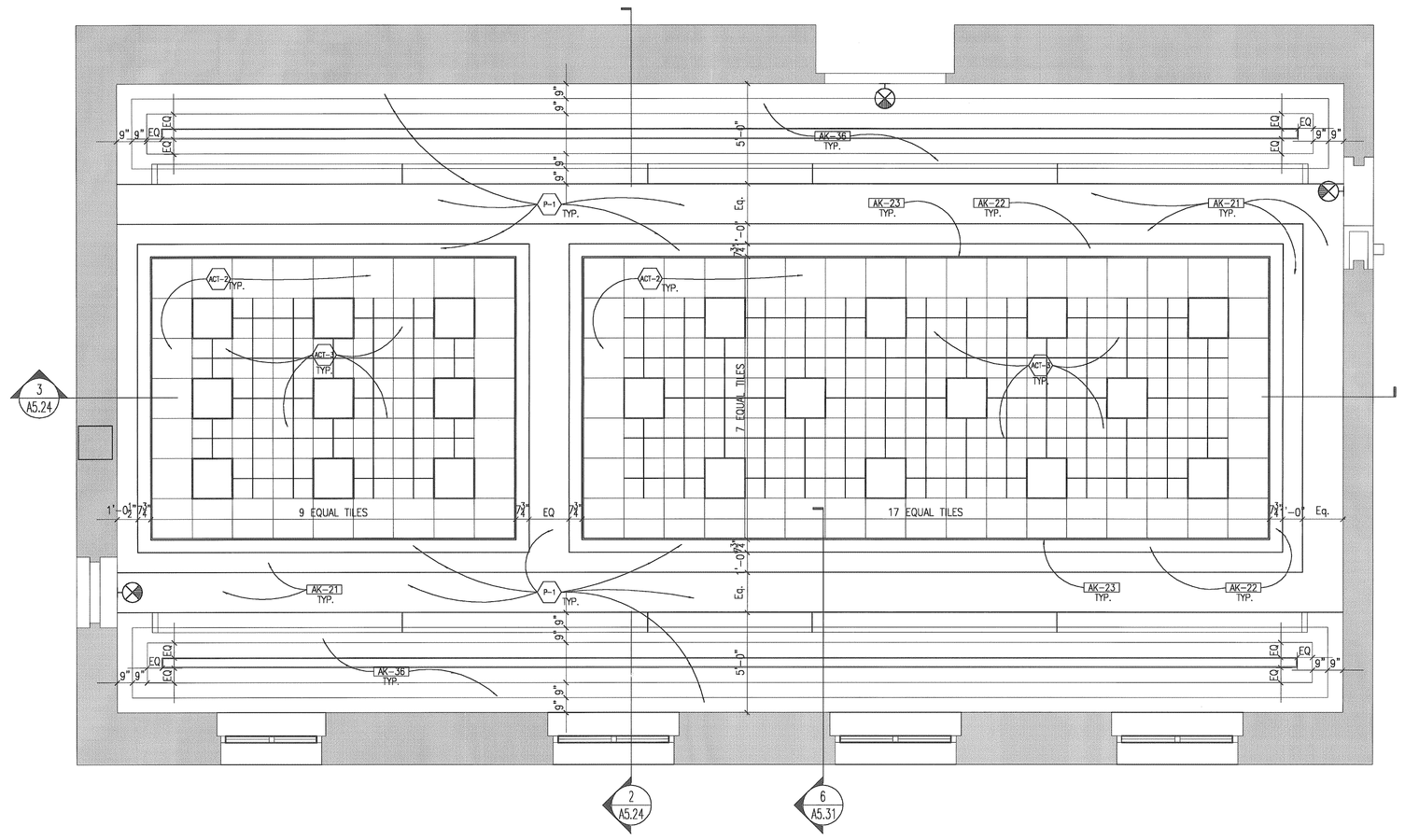

1 A6.11 REFLECTED CEILING PLAN @ @ 1ST FLOOR – SMALL CLAIM COURT (RM.119A & 119B)

SCALE: 1/4" = 1'-0"

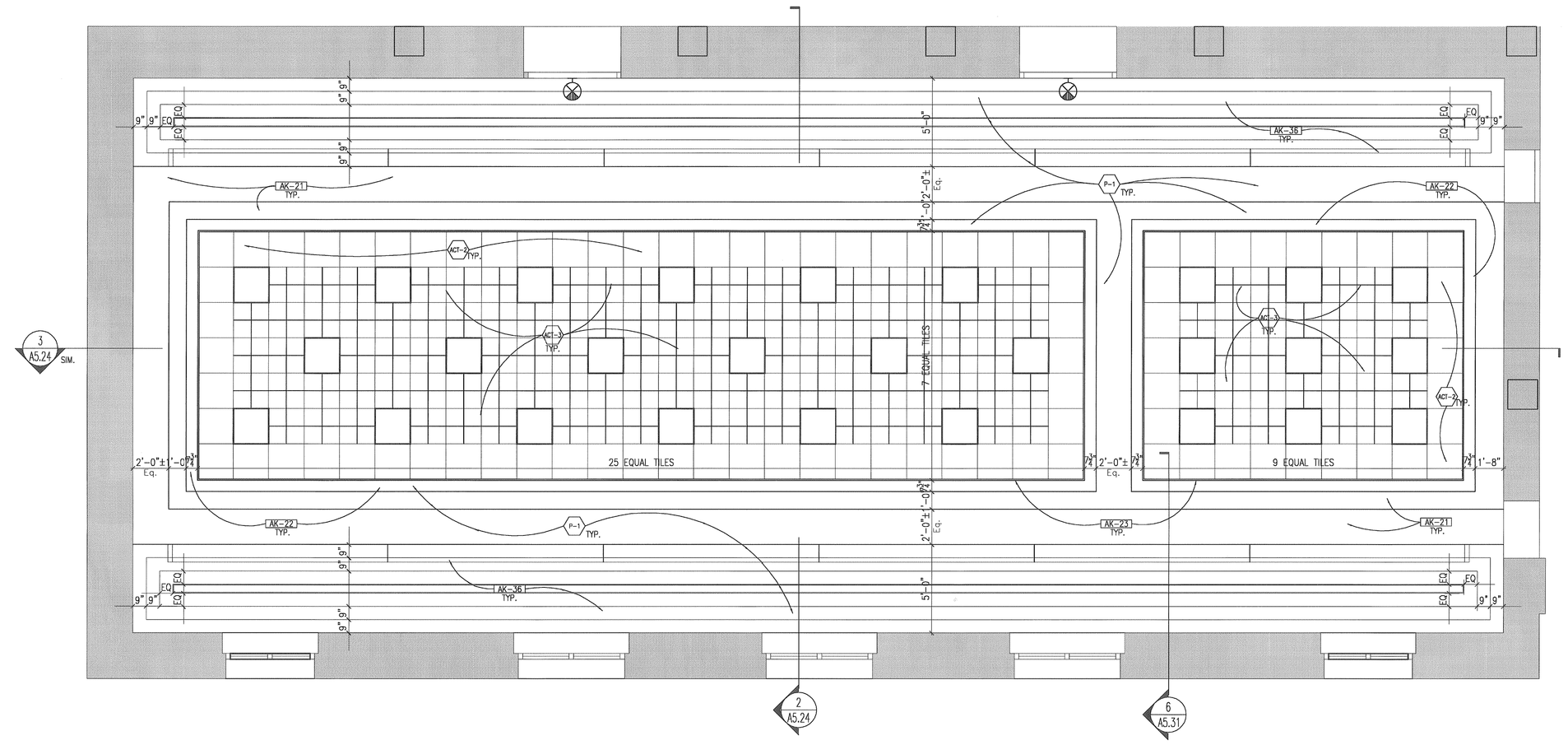

2 A6.11 REFLECTED CEILING PLAN @ 1ST FLOOR LANDLORD/TENANT COURT (RM.109A & 109B)

SCALE: 1/4" = 1'-0"

Interior Improvements to DC Superior Courts Building 'B'

409 E Street, NW
Washington, DC 20001

U.S. General Services Administration
301 7th Street, SW, Room 2021
Washington, DC 20407

LEO A DALY
PLANNING ARCHITECTURE ENGINEERING INTERIORS
EST. 1915

1201 Connecticut Ave, NW
Washington DC 20036 USA
Tel 202-861-4600 Fax 202-872-8530

Dalco INCORPORATED
10005 Old Columbia Road Suite L261
Columbia, MD 21046
Tel: 410-290-8827
Fax: 410-290-8812

Contractor
Address

KEY PLAN

ISSUES / REVISIONS

NO.	DESCRIPTION	DATE

FILE LOG

ACTIVITY	REFERENCE	BY
Manager		
Design		
Draw		
Draw		
Draw		
Check		

REGISTRATION

JOB No 52010300

CONSTRUCTION PACKAGE

ISSUED FOR CONSTRUCTION (FINAL) APRIL 8, 2003

ENLARGED RCP AND DETAILS

A6.11

© Leo A Daly Company 2003

STRUCTURAL NOTES

1. LIVE LOADS:

ROOF (SNOW LOAD)	LIVE LOAD	30 PSF
ROOF DEAD LOAD		15 PSF
FIRST FLOOR		100 PSF 250 PSF (AT MOVEABLE FILING SYSTEM AREA)
ATTIC		150 PSF (AT MECH. UNITS) (ATTIC) 40 PSF (ACCESS AREA) (ATTIC)

POSTING OF LIVE LOADS:

LIVE LOAD SHALL BE MARKED ON PLATES OF APPROVED DESIGN WHICH SHALL BE SUPPLIED AND SECURELY AFFIXED BY THE CONTRACTOR IN A CONSPICUOUS PLACE IN EACH SPACE TO WHICH THEY RELATE AS DIRECTED BY THE OWNER.

2. CODES:

ALL WORK AND MATERIALS SHALL COMPLY WITH THE LATEST EDITION OF THE BOCA BASIC BUILDING CODE.

ACI 318-89. BUILDING CODE REQUIREMENTS FOR REINFORCED CONCRETE, STRENGTH DESIGN METHOD.

AISC. SPECIFICATION FOR THE DESIGN, FABRICATION AND ERECTION OF STRUCTURAL STEEL FOR BUILDING, NINTH EDITION.

AWS D1.1 AMERICAN WELDING SOCIETY STRUCTURAL WELDING CODE.

3. CONCRETE:

ALL CONCRETE CONSTRUCTION SHALL CONFORM TO THE ACI CODE 301. CONCRETE SHALL HAVE 28 DAY COMPRESSIVE STRENGTH (F'c) OF F'c = 4000 PSI. ALL CONCRETE SHALL AIR ENTRAINED WITH MINIMUM AIR CONTENT OF 4% AND SHALL CONFORM TO ACI-301. THE MAXIMUM SLUMP SHALL BE 3 ± 1/2 INCHES. SAMPLES AND TESTS, COMPLYING WITH ACI-301, SHALL BE MADE BY AN INDEPENDENT TESTING LABORATORY SELECTED BY THE ARCHITECT. ALL CONCRETE SHALL BE NORMAL WEIGHT CONCRETE, UNLESS NOTED OTHERWISE.

PROVIDE 3/4-INCH CHAMFER ON ALL EXPOSED CONCRETE CORNERS.

4. REINFORCING STEEL:

ALL REINFORCING STEEL SHALL CONFORM TO ASTM A-615, GRADE 60. WELDED WIRE MESH TO CONFORM TO ASTM A-185. FABRICATE AND PROVIDE STANDARD SUPPORTING ACCESSORIES IN ACCORDANCE WITH ACI 315. PROVIDE EXTERIOR CORNER BARS SAME SIZE AND SPACING AS HORIZONTAL REINFORCING AT ALL GRADE BEAMS AND WALLS.

5. STRUCTURAL STEEL:

SHALL BE IN ACCORDANCE WITH AISC SPECS. SHOP OR FIELD CONNECTION SHALL BE WELDED OR MADE WITH 3/4-INCH DIAMETER HIGH STRENGTH BOLTS. ALL ANGLES, PLATES, AND MISCELLANEOUS STRUCTURAL STEEL SHALL CONFORM TO ASTM A-36, UNLESS NOTED OTHERWISE. ALL CONNECTING ANGLES, PLATES AND MISCELLANEOUS STRUCTURAL STEEL SHALL BE DESIGNED IN ACCORDANCE WITH "AISCS SPECIFICATIONS FOR THE DESIGN, FABRICATION AND ERECTION OF STRUCTURAL STEEL FOR BUILDING, (NINTH EDITION)"

6. METAL DECK:

METAL DECK SHALL BE DESIGNED FOR BASIC ALLOWABLE STRESS OF 20,000 PSI. SECTION PROPERTIES SHALL CONFORM TO THE "SPECIFICATIONS FOT THE COLD – FORMED STEEL STRUCTURAL MEMBERS" OF AISI.

A. FLOOR DECK:

ELEVATED FLOOR SLAB DECK SHALL BE COMPOSITE FLOOR DECK AND HAVE THE FOLLOWING PROPERTIES:

PROFILE DEPTH	1 1/2 INCHES
GAUGE	20 GAUGE
SECTION MODULUS	Sp .251in^2; Sn=.537 in.
MOMENT OF INERTIA	1=.586 in^4

FOR LIGHTWEIGHT CONCRETE COVER ON METAL DECK AND REINFORCING SEE PLAN NOTES.

7. CFRP:

CARBON FIBER REINFORCED POLYMER (CFRP) SHALL BE DESIGNED, FURNISHED MATERIAL AND INSTALLED, IN COORDINATION WITH OTHER TRADES, BY CFRP SUPPLIER.

CARBON FIBER REINFORCED POLYMER (CFRP) :

FIELD LAYOUT DIRECT TENSION
PULL OFF TESTS PER ASTM D 4541.

8. GENERAL:

THE GENERAL CONTRACTOR SHALL VERIFY ALL DIMENSIONS (INCLUDING FIELD VERIFICATIONS OF EXISTING CONDITIONS AND DIMENSIONS) BEFORE STARTING WORK OR FABRICATING ANY REINFORCING OR STRUCTURAL STEEL. THE ARCHITECT SHALL BE NOTIFIED OF ANY DISCREPANCIES FOUND.

SEE ARCHITECTURAL, MECHANICAL, AND ELECTRICAL DRAWINGS FOR SIZE AND LOCATION OF WALL, ROOF, FLOOR OPENINGS AND SLEEVES, AND CONCRETE PADS UNDER EQUIPMENT. THE CONTRACTOR SHALL VERIFY EXACT SIZE AND LOCATION WITH EQUIPMENT PURCHASED.

9. SUBMITTAL:

CAST-IN-PLACE CONCRETE- SUBMIT THE FOLLOWING

SHOP DRAWINGS FOR REINFORCING DETAILING, FABRICATING, BENDING AND PLACING CONCRETE REINFORCING.

LABORATORY TEST REPORTS FOR CONCRETE MATERIALS AND MIX DESIGN TEST.

METAL DECK – SUBMIT THE FOLLOWING

SHOP DRAWINGS, INCLUDING DETAILS AND SCEDULES FOR FABRICATION AND ASSEMBLY OF STEEL DECK LAYOUT, FIELD VERIFIED DIMENSIONS.

10. QUALITY CONTROL: *

OWNER WILL ENGAGE AN INDEPENDENT TESTING AN INSPECTION AGENCY TO INSPECT THE FOLLOWING:

CONCRETE:

SAMPLING AND TESTING FOR QUALITY CONTROL DURING CONCRETE PLACEMENT SHALL INCLUDE THE FOLLOWING:

SLUMP- ASTM C143
CONCRETE TEMPERATURE
COMPRESSION TEST: ASTM C31, ONE SET OF FOUR STANDARD CYLINDERS FOR EACH COMPRESSIVE – STRESS TEST. TEST CYLINDER AS PER ASTM 39; ONE SET FOR EACH PDUR EXCEEDING 5 CU. YDS. ONE SPECIMIN TESTED AT 7 DAYS , TWO SPECIMINS TESTED AT 28 DAYS.

METAL DECK:

FIELD LAYOUT, VISUAL INPECTION OF ALL ATTACHMENTS.

* CARBON FIBER REINFORCED POLYMER (CFRP)

MANUFACTURER PRODUCT DATA, TENSIL PROPERTIES, INSTALLATIONS, INSTRUCTION, ETC., PER SPECIFICATIONS SECTION 03320.

Interior Improvements to DC Superior Courts Building 'B'

409 E Street, NW
Washington, DC 20001

U.S. General Services Administration
301 7th Street, SW, Room 2021
Washington, DC 20407

LEO A DALY
PLANNING ARCHITECTURE ENGINEERING INTERIORS
EST. 1915

1201 Connecticut Ave, NW
Washington DC 20036 USA
Tel 202-861-4600 Fax 202-872-8530

Dalco
10005 Old Columbia Road Suite L261
Columbia, MD 21046
Tel: 410-290-8827
Fax: 410-290-8812

Contractor
Address

KEY PLAN

ISSUES / REVISIONS

NO.	DESCRIPTION	DATE

FILE LOG

ACTIVITY	REFERENCE	BY
Manager		
Design		
Draw		
Draw		
Draw		
Check		

REGISTRATION

JOB No 52010300

CONSTRUCTION PACKAGE

ISSUED FOR CONSTRUCTION (FINAL) APRIL 8, 2003

GENERAL NOTES

S1.00

© Leo A Daly Company 2003

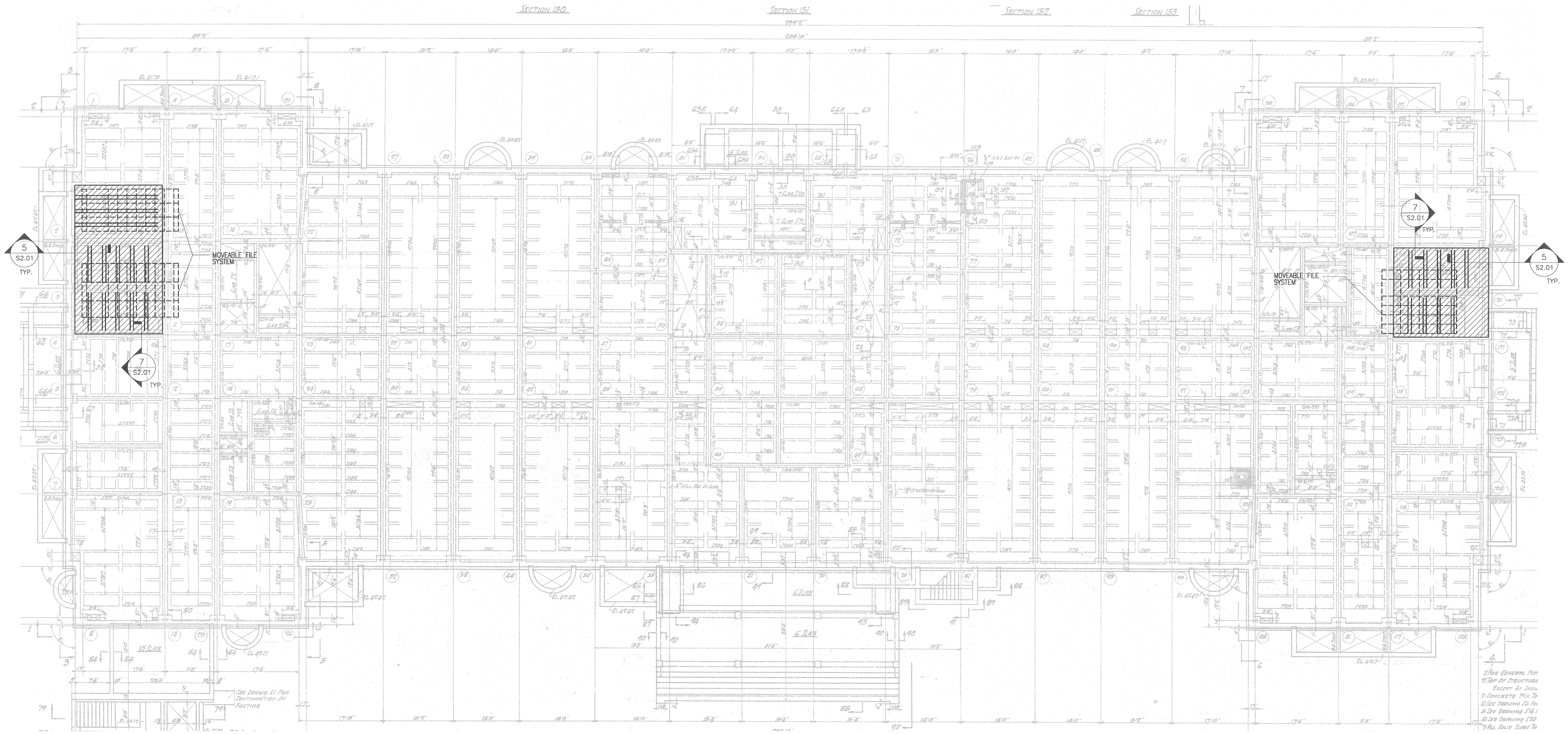

1 / S1.01 FIRST FLOOR CONCRETE FRAMING PLAN
SCALE: 1/8" = 1'-0"

JOISTS BELOW MOVEABLE FILING SYSTEM REQUIRE CFRC REINFORCEMENT. SEE DETAILS 5&6/S2.01

Interior Improvements to DC Superior Courts Building 'B'

409 E Street, NW
Washington, DC 20001

U.S. General Services Administration
301 7th Street, SW, Room 2021
Washington, DC 20407

LEO A DALY
PLANNING ARCHITECTURE ENGINEERING INTERIORS
EST. 1915

1201 Connecticut Ave, NW
Washington DC 20036 USA
Tel 202-861-4600 Fax 202-872-8530

Dalco INCORPORATED
10005 Old Columbia Road Suite L261
Columbia, MD 21046
Tel: 410-290-8827
Fax: 410-290-8812

Contractor
Address

KEY PLAN

ISSUES / REVISIONS

NO.	DESCRIPTION	DATE

FILE LOG

ACTIVITY	REFERENCE	BY
Manager		
Design		
Draw		
Draw		
Draw		
Check		

REGISTRATION

JOB No 52010300

CONSTRUCTION PACKAGE

ISSUED FOR CONSTRUCTION (FINAL) APRIL 8, 2003

FIRST FLOOR FRAMING PLAN

S1.01

© Leo A Daly Company 2003

1 / S1.04 ATTIC FLOOR CONCRETE FRAMING PLAN

SCALE: 1/8" = 1'-0"

1. EXISTING STEEL BEAMS:
   ALL BEAMS FLUSH : TOP AT ELEVATION 99.50 EXCEPT AS FOLLOWS:
   a.) ALL 8B13 AND 10B15– 1 – 1/2" BELOW BEAMS INTO WHICH THEY FRAME.
   b.) BEAMS SHOWN ON SECTIONS. SEE EXISTING DRAWINGS.

2. NEW SLABS:
   2 1/2" CONCRETE COVER ON 1–1/2" DEEP, GALVANIZED (G–60) METAL DECK (T=4"). REINFORCED WITH 6X6–W1.4 X W1.4 WIRE MESH.

INDICATES DIRECTION OF METAL DECK

Interior Improvements to
DC Superior Courts
Building 'B'

409 E Street, NW
Washington, DC 20001

U.S. General Services Administration
301 7th Street, SW, Room 202
Washington, DC 20407

LEO A DALY
PLANNING ARCHITECTURE ENGINEERING INTERIORS
EST. 1916

1201 Connecticut Ave, NW
Washington DC 20036 USA
Tel 202-861-4600 Fax 202-872-8530

Dalco INCORPORATED
10005 Old Columbia Road Suite L261
Columbia, MD 21046
Tel: 410-290-8827
Fax: 410-290-8812

Contractor
Address

KEY PLAN

ISSUES / REVISIONS

NO.	DESCRIPTION	DATE

FILE LOG

ACTIVITY	REFERENCE	BY
Manager		
Design		
Draw		
Draw		
Draw		
Check		

REGISTRATION

JOB No 52010300

CONSTRUCTION PACKAGE

ISSUED FOR CONSTRUCTION (FINAL) APRIL 8, 2003

ATTIC FRAMING PLAN

S1.04

© Leo A Daly Company 2003

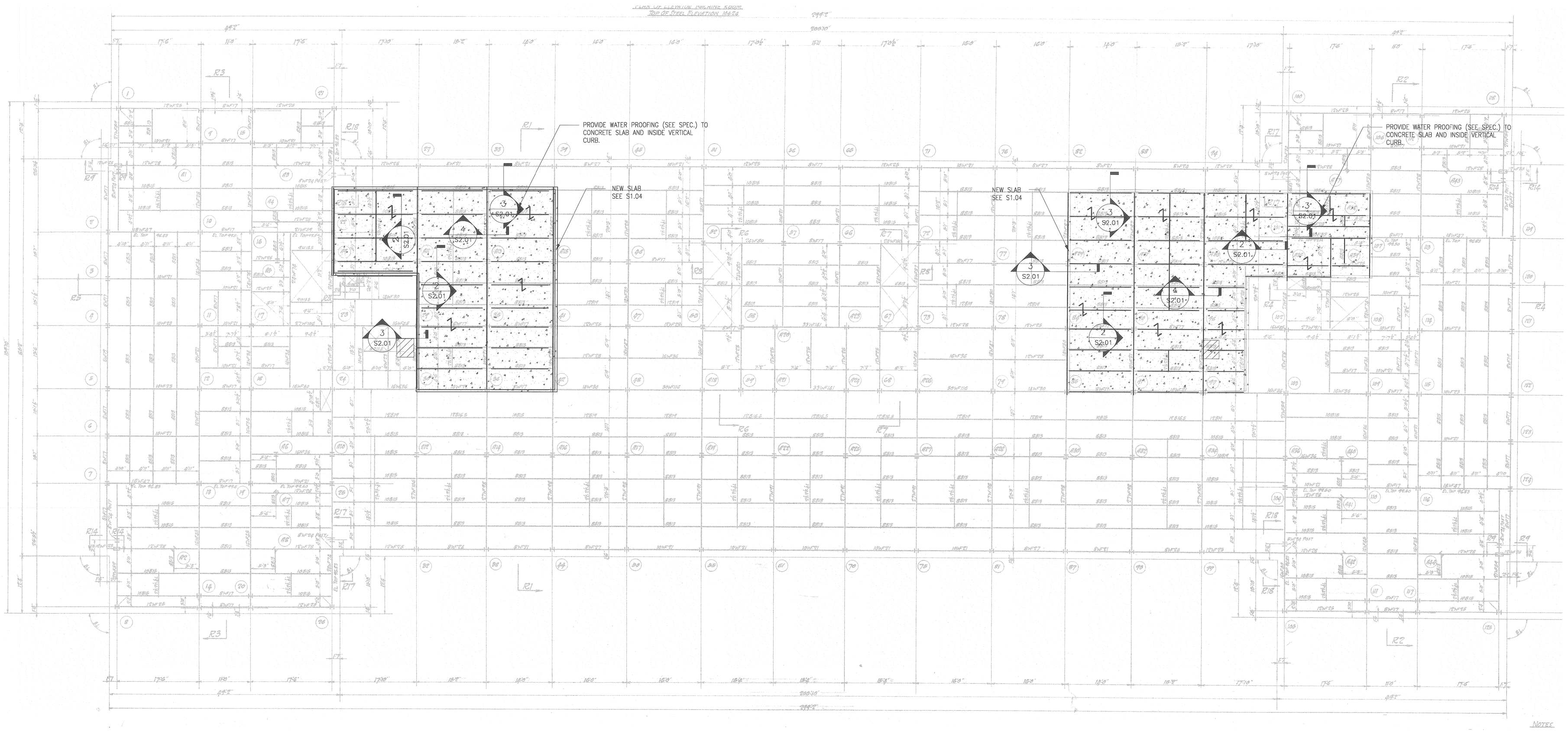

1 / S1.05 ATTIC FLOOR STEEL FRAMING PLAN
SCALE: 1/8" = 1'-0"

ROOF OPENING LOCATIONS

Interior Improvements to DC Superior Courts Building 'B'

409 E Street, NW
Washington, DC 20001

U.S. General Services Administration
301 7th Street, SW, Room 2021
Washington, DC 20407

LEO A DALY
1201 Connecticut Ave, NW
Washington DC 20036 USA
Tel 202-861-4600 Fax 202-872-8530

Dalco
10005 Old Columbia Road Suite L261
Columbia, MD 21046
Tel: 410-290-8827
Fax: 410-290-8812

Contractor
Address

KEY PLAN

ISSUES / REVISIONS

NO.	DESCRIPTION	DATE

FILE LOG

ACTIVITY	REFERENCE	BY
Manager		
Design		
Draw		
Draw		
Draw		
Check		

REGISTRATION

JOB No 52010300

CONSTRUCTION PACKAGE

ISSUED FOR CONSTRUCTION (FINAL) APRIL 8, 2003

ATTIC FLOOR STEEL FRAMING PLAN

S1.04A

© Leo A Daly Company 2003

1 / S2.03 ROOF STEEL FRAMING PLAN
SCALE: 1/8" = 1'-0"

JOISTS BELOW MOVEABLE FILING SYSTEM REQUIRE CFRC REINFORCEMENT. SEE DETAILS 1&2/S2.02

Interior Improvements to
DC Superior Courts
Building 'B'

409 E Street, NW
Washington, DC 20001

U.S. General Services Administration
301 7th Street, SW, Room 2021
Washington, DC 20407

LEO A DALY
PLANNING ARCHITECTURE ENGINEERING INTERIORS
EST. 1965

Tenth Floor Connecticut Ave NW
Washington DC 20036 USA
Tel 202-861-4600 Fax 202-872-8530

Dalco
10005 Old Columbia Road Suite L261
Columbia, MD 21046
Tel: 410-290-8827
Fax: 410-290-8812

Contractor
Address

KEY PLAN

ISSUES / REVISIONS

NO.	DESCRIPTION	DATE

FILE LOG

ACTIVITY	REFERENCE	BY
Manager		
Design		
Draw		
Draw		
Draw		
Check		

REGISTRATION

JOB No 52010300

PERMIT SET
MARCH 12, 2003

ROOF STEEL FRAMING PLAN

S1.05

© Leo A Daly Company 2003

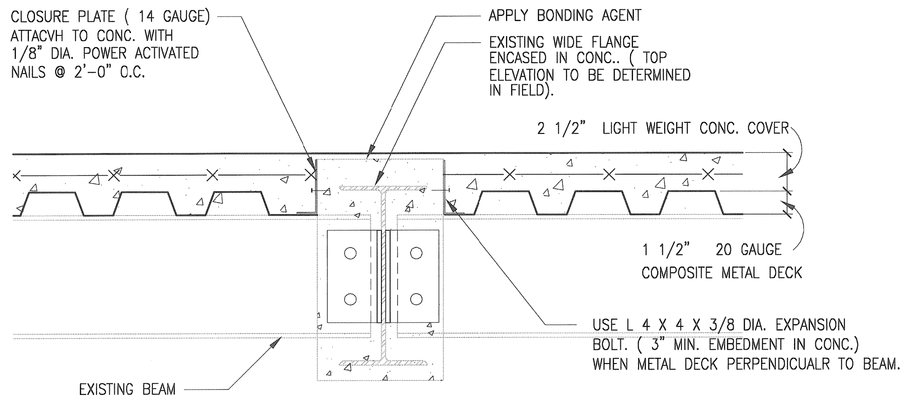

4 S2.01 BEAM DETAIL
SCALE: 1 1/2" = 1'-0"

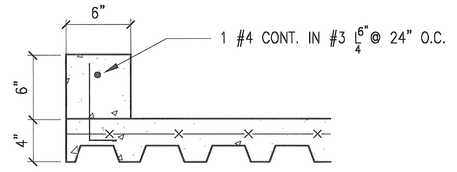

3 S2.01 CONCRETE CURB DETAIL
SCALE: NTS
ALL AROUND NEW SLAB

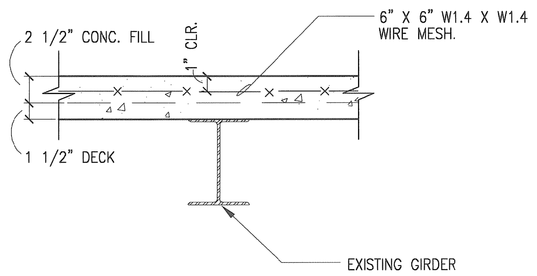

DECK PERPENDICULAR TO BEAM

2 S2.01 TYPICAL SECTION AT BEAM
SCALE: 3"=1'-0"

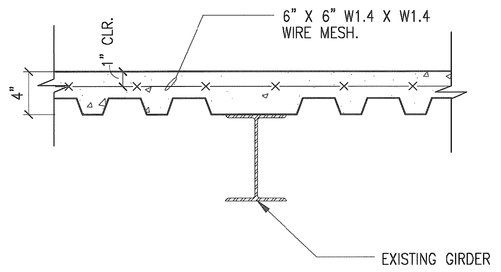

DECK PARALLEL TO BEAM

NOTES:

DECK RIB VALLY TO BE CENTERED OVER BEAM WHERE POSSIBLE OR DECK MUST BE SPLOIT FULL LENGTH PF BEAM TO PROVIDE CONCRETE HAUNCH WITH MIN. WIDTH OF 4 1/2".

1 S2.01 TYPICAL SECTION AT GIRDER
SCALE: 3"=1'-0"

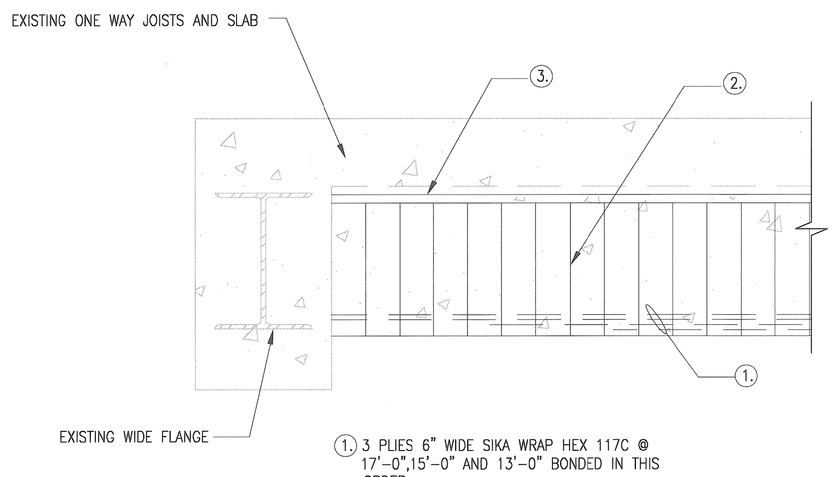

1. 3 PLIES 6" WIDE SIKA WRAP HEX 117C @ 17'-0",15'-0" AND 13'-0" BONDED IN THIS ORDER.
2. 2 PLIES FULL SPAN U-WRAP W/ SIKA WRAP HEX 117C (TYP.)
3. 1 PLY FULL SPAN U-WRAP W/ SIKA WRAP HEX 117C (TYP.)

7 S2.01 ENLARGED TYPICAL SECTION AT CONCRETE JOISTS
SCALE: NTS

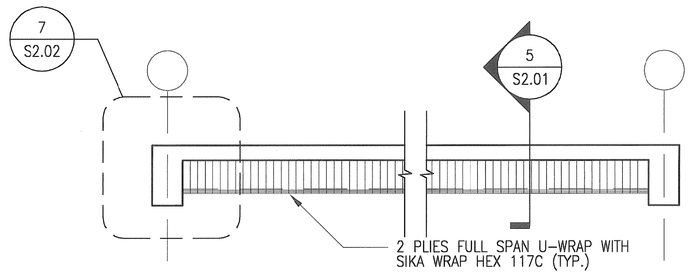

6 S2.01 TYPICAL SECTION AT CONCRETE JOISTS
SCALE: NTS

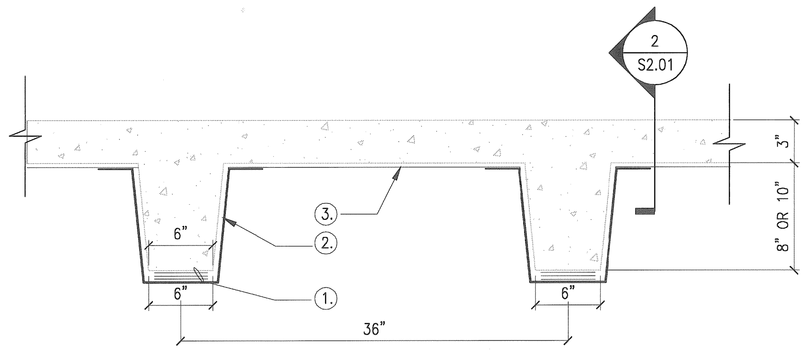

1. 3 PLIES 6" WIDE SIKA WRAP HEX 117C @ 17'-0",15'-0" AND 13'-0" BONDED IN THIS ORDER.
2. 2 PLIES FULL SPAN U-WRAP W/ SIKA WRAP HEX 117C (TYP.)
3. 1 PLY FULL SPAN SIKA WRAP HEX 117C (TYP.)

5 S2.01 TYPICAL SECTION AT CONCRETE JOISTS
SCALE: 1 1/2"=1'-0"

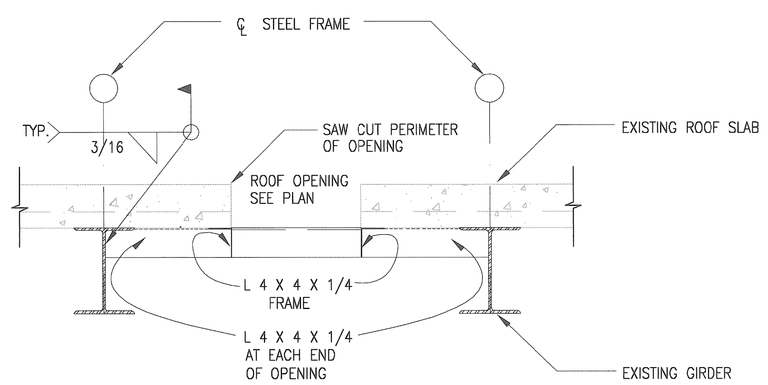

* NO ANGLE REQUIRED WHEN EDGE WHEN OPENING IS LESS THAN 6" FROM ℄ OF BEAM

8 S2.01 TYPICAL ROOF OPENING
SCALE: 1 1/2"=1'-0"

Interior Improvements to DC Superior Courts Building 'B'

409 E Street, NW
Washington, DC 20001

U.S. General Services Administration
301 7th Street, SW, Room 2021
Washington, DC 20407

LEO A DALY
PLANNING ARCHITECTURE ENGINEERING INTERIORS
EST. 1915
1201 Connecticut Ave, NW
Washington DC 20036 USA
Tel 202-861-4600 Fax 202-872-8530

Dalco
10005 Old Columbia Road Suite L261
Columbia, MD 21046
Tel: 410-290-8827
Fax: 410-290-8812

Contractor
Address

KEY PLAN

ISSUES / REVISIONS

NO.	DESCRIPTION	DATE

FILE LOG

ACTIVITY	REFERENCE	BY
Manager		
Design		
Draw		
Draw		
Draw		
Check		

REGISTRATION

JOB No 52010300

CONSTRUCTION PACKAGE

ISSUED FOR CONSTRUCTION (FINAL) APRIL 8, 2003

SECTIONS AND DETAILS

S2.01

© Leo A Daly Company 2003

GENERAL NOTES: MECHANICAL

1. ALL MECHANICAL WORK AND EQUIPMENT SHALL MEET THE REQUIREMENTS OF THE MOST RECENTLY REVISED VERSION OF ALL APPLICABLE LAWS, RULES, REGULATIONS AND ORDINANCES OF FEDERAL, INTERNATIONAL MECHANICAL CODE, STATE, LOCAL AND/OR MUNICIPAL CODES WHETHER SHOWN ON THE DRAWING OR NOT.
2. ADHERE TO THE DRAWINGS WHEN REQUIREMENTS ARE STRICTER THAN CODE REQUIREMENTS AND ARE PERMITTED UNDER THE CODE.
3. REPORT ANY ALTERATION TO AND/OR DEVIATIONS FROM THE DRAWINGS AS REQUIRED BY THE INTERNATIONAL MECHANICAL CODE, FEDERAL, STATE, ,LOCAL AND/OR MUNICIPAL CODES TO THE ARCHITECT AND SECURE SECURE HIS/HER APPROVAL BEFORE STARTING ALTERATION.
4. THE CONTRACTOR SHALL REQUEST SUPPLEMENTARY INSTRUCTIONS FROM THE ARCHITECT IN ALL CASES OF DOUBT AS TO THE WORK INTENDED OR IF ADDITIONAL EXPLANATION IS NEEDED.
5. DUCT DIMENSIONS INDICATED ON THE DRAWING ARE CLEAR INSIDE DIMENSIONS. INTERNALLY LINED DUCTWORK SHALL BE INCREASED IN BOTH DIMENSIONS BY TWICE THE THICKNESS OF THE LINER.
6. DUCTWORK SHALL BE FABRICATED AND INSTALLED IN COMPLIANCE WITH THE LATEST EDITION OF THE SMACNA DUCT CONSTRUCTION STANDARDS. PROVIDE ALL NECESSARY DUCTWORK ACCESSORIES TO ALLOW FOR PROPER AIR BALANCE OF THE SYSTEM.
7. FIRE DAMPERS SHALL BE PROVIDED AT ALL DUCT PENETRATIONS THROUGH TWO AND THREE HOUR RATED WALLS, ALL FLOOR PENETRATIONS WHETHER SHOWN ON THE DRAWING OR NOT AND AS INDICATED ON THE DRAWINGS. DUCTWORK LESS THAN 20 SQ IN AREA SHALL HAVE NO FIRE DAMPER.
8. FIRE DAMPER FREE AREA SHALL BE THE SAME AREA AS THE DUCT IT IS INSTALLED IN. PROVIDE ACCESS DOOR FOR FIRE DAMPER SERVICING.
9. PROVIDE AN ADJUSTABLE VOLUME DAMPER FOR EACH DIFFUSER ATTACHED DIRECTLY TO MAIN TRUNK DUCT SPIN-IN-FITTINGS OR AS FAR AWAY AS POSSIBLE FROM DIFFUSER.
10. PROVIDE TURNING VANES AT ALL SQUARE AND RECTANGULAR BRANCH DUCT (ELBOWS) WHETHER SHOWN ON THE DRAWING OR NOT.
11. PROVIDE ACOUSTICAL INSULATION TO THE FOLLOWING:
    A. 1" LINER 25' DOWNSTREAM AND 25' UPSTREAM OF ALL NEW AIR HANDLING UNITS.
    B. 1" LINER UP TO 25 FEET UPSTREAM OF ALL NEW EXHAUST FANS.
    C. PROVIDE 1" ACOUSTICAL LINING TO ALL TRANSFER DUCTS EXCEPT COURTROOMS WHERE 2" LINING SHALL BE PROVIDED.
    D. PROVIDE 1" LINER UP TO 10 FT DOWNSTREAM OF ALL VAV BOXES.
    E. PROVIDE 2" LINER DOWNSTREAM OF ALL VAV BOXES SERVING COURT ROOMS.
    F. PROVIDE 2" LINER ON RA DUCTWORK UP TO 5 FEET F ROM OPENINGS.
12. ALL DUCTWORK WITH ACOUSTICAL LINING NEED NOT BE INSULATED EXCEPT ALL SUPPLY AND RETURN AIR DUCTWORK LOCATED IN THE ATTIC.
13. NOT USED.
14. INSULATED FLEXIBLE DUCT SHALL BE PROVIDED TO CONNECT BETWEEN RIGID DUCTWORK AND VARIOUS AIR OUTLETS, ETC., AS SHOWN ON THE DRAWING. MINIMUM LENGTH SHALL BE 2'-0" AND MAXIMUM LENGTH SHALL BE 8'-0" AND SHALL REQUIRE NO MORE THAN TWO ELBOWS WHEN INSTALLED. IN THE EVENT OF CONNECTIONS NEEDING MORE THAN 8 FEET IN LENGTH, SPIN-IN-FITTING (HARD DUCT) SHALL BE EXTENDED TO ATTAIN THE MIN./MAX. PARAMETERS FOR FLEXIBLE DUCT CONNECTIONS.
15. REFER TO ARCHITECTURAL REFLECTED CEILING PLAN FOR EXACT LOCATION OF ALL CEILING MOUNTED AIR DISTRIBUTION EQUIPMENT.
16. INSTALL FLANGES OR UNIONS AT PIPING CONNECTIONS TO ALL MECHANICAL EQUIPMENT SUCH THAT UNIT CAN BE REMOVED WITHOUT DISMANTLING ALL PIPING.
17. COORDINATE ROUTING & ELEVATION OF ALL DUCTWORK AND PIPING WITH ALL ALL TRADES BEFORE CONSTRUCTION BEGINS.
18. ALL PIPE PENETRATIONS THROUGH WALLS AND FLOORS SHALL BE PROVIDED WITH SLEEVES AND ESCUTCHEON PLATES.
19. PIPES SHALL BE CENTERED TO ALLOW FOR EXPANSION AND CONTRACTION, ALSO PROVIDE CAULKING, WATERPROOFING AND FIREPROOFING WHERE REQUIRED.
20. ALL PIPES EXPOSED TO THE OUTDOOR WEATHER CONDITION SHALL BE INSULATED AND HEAT TRACED, REFER TO SPECIFICATIONS AND DETAILS FOR MATERIALS TO BE USED.
21. ALL TEMPERATURE SENSORS AND SIMILAR DEVICES SHALL BE MOUNTED 54" ABOVE FINISH FLOOR UNLESS NOTED OTHERWISE.
22. ALL HOUSEKEEPING (CONC.) PADS SHALL BE 4 INCHES THICK MINIMUM.

GENERAL NOTES: PLUMBING

1. ALL PLUMBING WORK AND EQUIPMENT SHALL MEET THE REQUIREMENTS OF THE MOST RECENTLY REVISED VERSION OF ALL APPLICABLE LAWS, RULES, REGULATIONS AND ORDINANCES OF FEDERAL, INTERNATIONAL PLUMBING CODE, STATE, LOCAL AND/OR MUNICIPAL CODES WHETHER SHOWN ON THE DRAWING OR NOT.
2. ALL PIPING SHALL BE ROUTED WITH SLOPE AS FOLLOWS:
   SANITARY – 1/8 INCH PER FOOT (MIN.)
   STORM – 1/8 INCH PER FOOT (MIN.)
3. COORDINATE ROUTING OF ALL PIPING WITH OTHER TRADES PRIOR TO START OF CONSTRUCTION.
4. PROVIDE AS-BUILT DRAWINGS OF ALL UNDERGROUND PIPING INSTALLED WITH DIMENSIONS FROM CENTERLINE OF COLUMN TO CENTER OF PIPES WITH INVERT ELEVATIONS.
5. ALL PIPING SHALL BE PROVIDED WITH SECTIONAL SHUT-OFF VALVES, AS SHOWN ON PLROJECT PLANS AND ACCESS PANELS FOR ALL HIDDEN VALVES. PROVIDE ISOLATION VALVES FOR ALL PLUMBING FIXTURES.
6. WALL HYDRANTS SHALL BE NON-FREEZE TYPE AND SHALL BE EQUIPPED WITH AN APPROVED VACUUM BREAKER.
7. ALL CONDENSATE DRAIN PIPING SHALL BE SLOPED 1/4" PER FOOT AND SHALL HAVE A 2" AIR GAP WHERE PIPE TERMINATES AT FLOOR/AREA DRAIN.
8. PLUMBING CONTRACTOR SHALL BACK VENT FIXTURES AT FLOOR ABOVE WHERE STACK BEGINS OFFSET.
9. PROVIDE PIPE INSULATION TO ALL DOMESTIC HOT AND COLD WATER PIPES AND STORM PIPING (WHEN HORIZONTAL) ABOVE CEILING SPACE, REFER TO SPECIFICATIONS FOR TYPES OF INSULATION TO BE USED.
10. ENTIRE BUILDING SHALL BE SPRINKLERED IN STRICT COMPLIANCE WITH NFPA 13 AND THE RULES AND REGULATIONS OF THE DISTRICT OF COLUMBIA. SEE FIRE PROTECTION RISER ON SHEET P3.03.
11. PIPES EXPOSED TO THE WEATHER SHALL BE INSULATED AND HEAT TRACED. REFER TO SPECIFICATIONS FOR MATERIALS TO BE USED.
12. ALL PIPE PENETRATIONS THROUGH WALLS SHALL BE PROVIDED WITH SLEEVES AND ESCUTCHEON PLATES.
13. PIPES SHALL BE CENTERED TO ALLOW FOR EXPANSION AND CONTRACTION, ALSO PROVIDE CAULKING, WATERPROOFING AND FIREPROOFING WHERE REQUIRED.

MECHANICAL AND PLUMBING SYMBOLS

SYMBOL	DESCRIPTION	SYMBOL	DESCRIPTION	SYMBOL	DESCRIPTION
CA	COMPRESSED AIR		PIPE ANCHOR	AD / AD	AUTOMATIC DAMPER
COS	CONDENSER WATER SUPPLY		PIPE DOWN		
COR	CONDENSER WATER RETURN		PIPE GUIDE	M / M	MOTORIZED DAMPER
CWS	CHILLED WATER SUPPLY		PIPE UP		
CWR	CHILLED WATER RETURN		PIPE WITH HEAT TRACING	BD / BD	BACKDRAFT DAMPER–BD
	DOMESTIC COLD WATER		PRESSURE GAUGE		
	DOMESTIC HOT WATER	RD	ROOF DRAIN		DUCTWORK (PROVIDED BY LANDLORD)
DRW	DRINKING WATER	SA"A"	SHOCK ABSORBER		
DW	DRINKING WATER PIPE		SIGHT GLASS (FLOW TYPE)	FD / FD	FIRE DAMPER–FD
ED	EXPRESS DRAIN	SP	STATIC PRESSURE SENSOR		
F	FIRE LINE		STRAINER		FAN POWERED VAV BOX WITH ELECTRIC HEAT
FW	FILTERED WATER		THERMOMETER		
G	NATURAL GAS	T	THERMOSTAT		REGULAR VAV BOX WITHOUT ELECTRIC HEAT
HWS	HOT WATER SUPPLY		TRAP PRIMER		
HWR	HOT WATER RETURN		UNION	VD	SMOKE DAMPER
		WCO	WALL CLEANOUT		
S	SANITARY SEWER			S	SMOKE DETECTOR / SENSOR
D	CONDENSATE DRAIN PIPE	LAV	LAVATORY		
SD	SUBSOIL DRAIN	MS	MOP SINK		VOLUME DAMPER–VD MANUAL DAMPER–MD
ST	STORM SEWER	SS	SERVICE SINK		
V	SANITARY VENT	SH	SHOWER HEAD		FLEXIBLE CONNECTION
	BALANCING VALVE	UR	URINAL		
	BALL VALVE	1	COLUMN NUMBER OR LETTER		FLEXIBLE DUCT
	BUTTERFLY VALVE	SH	SHOWER		
	CHECK VALVE				OUTSIDE AIR DUCT (DN)
	COCK (GAGE, AIRVENT, DRAIN)	WC	WATER CLOSET (FLUSH VALVE)		
	DRY VALVE	WC	WATER CLOSET (TANK TYPE)		OUTSIDE AIR DUCT (UP)
	DCVBPA–DOUBLE CHECK VALVE BACKFLOW PREVENTION ASSEMBLY RZBP–REDUCED ZONE BACKFLOW PREVENTER DCDA–DOUBLE CHECK DETECTOR ASSEMBLY	W / L	DOMESTIC WATER RISER		
		S / L	SANITARY RISER	12x12 / 12x12	RECTANGULAR DUCT (FIRST NUMBER IS SIDE SHOWN IN INCHES)
	ECCENTRIC PLUG VALVE	L	DOOR LOUVER		
	GAS COCK	U	DOOR UNDERCUT		RETURN/EXHAUST DUCT (DN)
	GATE VALVE		POINT OF CONNECTION (NEW TO EXISTING)		
	GLOBE VALVE	FP / L	FIRE PROTECTION RISER		RETURN OR EXHAUST DUCT (UP)
	MIXING VALVE	G / L	NATURAL GAS RISER		
	OS&Y VALVE	ST / L	STORM RISER	12"Ø / 12"Ø	ROUND DUCT
	PRE–ACTION VALVE	100	ROOM NUMBER		
	PRESSURE REGULATING VALVE	DW / L	DOMESTIC WATER RISER		SUPPLY AIR DUCT (DN)
	SAFETY RELIEF VALVE	V / L	VENT RISER		
	TEMP. & PRESS. RELIEF VALVE	R S	REFRIGERANT MONITOR		SUPPLY AIR DUCT (UP)
	TEST PLUG	A	(REFRIGERANT) AUDIBLE AND VISUAL SIGNALING DEVICE		
	VALVE IN RISER	P	PURGE SWITCH		RECTANGULAR REGISTER OR DIFFUSER–SUPPLY
	WET VALVE	AP	PRESSURE DIFFERENTIAL SENSOR		
	CAP	SA / L	SUPPLY AIR RISER	L.C.	TURNING VANES
CO	CLEANOUT	RA / L	RETURN AIR RISER		
	FIRE DEPARTMENT CONNECTION	OA / L	OUTSIDE AIR RISER		RECTANGULAR REGISTER RETURN OR EXHAUST
	FLANGE	EA / L	EXHAUST AIR RISER		
WH	WALL HYDRANT	RELIEF / L	RELIEF AIR RISER		ROUND FACE SUPPLY DIFFUSER
	BUTTERFLY VALVE	SSP	SPACE STATIC PRESSURE SENSOR		
FCO	FLOOR CLEANOUT	CWS / L	CHILLED WATER SUPPLY RISER		SQUARE FACE SUPPLY DIFFUSER
FD/AD	FLOOR DRAIN – FD AREA DRAIN – AD	CWR / L	CHILLED WATER RETURN RISER		
	PRESSURE REDUCING VALVE	HWS / L	HOT WATER SUPPLY RISER	GLYS	GLYCOL SUPPLY
CO	GRADE CLEANOUT	HWR / L	HOT WATER RETURN RISER	GLYR	GLYCOL RETURN
HB	HOSE BIBB	DRW / L	DRINKING WATER RISER		
H	HUMIDISTAT	T	T'STAT SENSOR,(DDC) DUCT OR CEILING MTD	C / RO	DIFFUSER TYPE CFM

ABBREVIATIONS

A		FIN.	FINISH	O.C.	ON CENTER
AD	AREA DRAIN/AUTOMATIC DAMPER	FT.	FEET	OED	OPEN–END DUCTWORK
ADJ.	ADJUSTABLE	FPM	FEET PER MINUTE	OFD	OVERFLOW DRAIN
AFD	ADJUSTABLE FREQUENCY DRIVE	FS	FLOOR SINK	OPNG.	OPENING
AFF	ABOVE FINISHED FLOOR	FW	FILTERED WATER		
AP	ACCESS PANEL			P	
ARCH.	ARCHITECTURAL	G		PNL.	PANEL
AUTO.	AUTOMATIC	GCF	GARAGE CIRCULATING FAN	PPM	PARTS PER MILLION
		GD	GUTTER DRAIN/GARAGE DRAIN	PRV	PRESSURE REGULATING VALVE
B		GLYS	GLYCOL SUPPLY	PSI	POUNDS PER SQUARE INCH
BD	BACKDRAFT DAMPER	GLYR	GLYCOL RETURN		
BTUH	BRITISH THERMAL UNIT/HOUR	GPM	GALLONS PER MINUTE	R	
BWV	BACKWATER VALVE	GRD	GROUND	RA	RETURN AIR
		GWH	GAS WATER HEATER	RD	ROOF DRAIN
C				REG.	REGISTER
CD	CEILING DIFFUSER	H		RF	RETURN/RELIEF AIR FAN
CFF	CAPPED FOR FUTURE	H_2O	WATER	RL	RAIN LEADER
CFM	CUBIC FOOT PER MINUTE	HB	HOSE BIBB	R/O	REVERSE OSMOSIS
CFH	CUBIC FEET PER HOUR	HP	HORSEPOWER/HEAT PUMP	RM.	ROOM
C.I.	CAST IRON	HSWG	HIGH SIDE WALL GRILLE	RTU	ROOF TOP UNIT
CLG.	CEILING	HSWR	HIGH SIDE WALL REGISTER		
CO	COMPANY/CLEAN OUT	HW	HOT WATER	S	
COMP.	COMPRESSOR	HWBH	HOT WATER BASEBOARD HEATER	SA	SUPPLY AIR/SHOCK ABSORBER
CONC.	CONCRETE	HWCH	HOT WATER CONVECTOR HEATER	SAF	SUPPLY AIR FAN
COND. DR.	CONDENSATE DRAIN	HWP	HOT WATER PUMP	SAN./S	SANITARY
CONN.	CONNECTION	HWS	HOT WATER SUPPLY	SD	SHOWER DRAIN
CONT.	CONTINUATION/CONTINUE	HWR	HOT WATER RETURN	SEF	SMOKE EXHAUST FAN
COP	CONDENSER WATER PUMP			SF	SQUARE FEET/SUPPLY FAN
COR	CONDENSER WATER RETURN	I		SHT.	SHEET
COS	CONDENSER WATER SUPPLY	I.E.	INVERT ELEVATION	S/M	SHEET METAL
CR	CEILING REGISTER	INV. ELEV.	INVERT ELEVATION	S.P.	STATIC PRESSURE
CUH	CABINET UNIT HEATER			SPD.	SPEED
CW	COLD WATER	J		SQ.	SQUARE
CWP	CHILLED WATER PUMP	JAN.	JANITORIAL	ST	STORM
CWS	CHILLED WATER SUPPLY			STL.	STEEL
CWR	CHILLED WATER RETURN	K			
		KW	KILOWATT	T	
D				TD	TRANSFER DUCT/TRENCH DRAIN
DB	DRY BULB	L		TG	TRANSFER GRILLE
DEPT.	DEPARTMENT	LAT	LEAVING AIR TEMPERATURE	TRANS.	TRANSFER
DN.	DOWN	LSWG	LOW SIDE WALL GRILLE	TYP.	TYPICAL
DTL.	DETAIL	LSWR	LOW SIDE WALL REGISTER		
DW	DOMESTIC WATER	LVL	LEVEL	U	
DWG.	DRAWING	LWT	LEAVING WATER TEMPERATURE	UH	UNIT HEATER
DWH	DOMESTIC WATER HEATER				
		M		V	
E		MAX.	MAXIMUM	VAV	VARIABLE AIR VOLUME
E/EX/EXIST.	EXISTING	MBH	THOUSAND BTUH	VFD	VARIABLE FREQUENCY DRIVE
EAT	ENTERING AIR TEMPERATURE	MECH.	MECHANICAL	V/PH/HZ	VOLTS/PHASE/HERTZ
ED	EXPRESS DRAIN	MFR.	MANUFACTURER	VTR	VENT THRU ROOF
EF	EXHAUST FAN	MH	MANHOLE		
EL./ELEV.	ELEVATION	MIN.	MINIMUM	W	
ENT	ENTERING	MNL	MANUAL	W/	WITH
ESP	EXTERNAL STATIC PRESSURE	MTR	MOTOR	WB	WET BULB
EWT	ENTERING WATER TEMPERATURE			WC	WATER COLUMN
EXH.	EXHAUST	N		WCO	WALL CLEANOUT
EXP.	EXPANSION	NC	NOISE CRITERIA	WG	WATER GAUGE
		NEG.	NEGATIVE	WH	WALL HYDRANT
F		NO.	NUMBER	WMS	WIRE MESH SCREEN
°F	DEGREE FAHRENHEIT	N.O.	NORMALLY OPEN	WS	WET STACK
FCO	FLOOR CLEANOUT	N.C.	NORMALLY CLOSE		
FD	FIRE DAMPER/FLOOR DRAIN				
FH	FIRE HYDRANT	O			
		OA	OUTSIDE AIR		

Interior Improvements to DC Superior Courts Building 'B'

409 E Street, NW
Washington, DC 20001

GSA U.S. General Services Administration
301 7th Street, SW, Room 2021
Washington, DC 20407

LEO A DALY PLANNING ARCHITECTURE ENGINEERING INTERIORS
CBT. 1915
1201 Connecticut Ave, NW
Washington DC 20036 USA
Tel 202-861-4600 Fax 202-872-8530

Dalco Incorporated
10005 Old Columbia Road Suite L261
Columbia, MD 21046
Tel: 410-290-8827
Fax: 410-290-8812

Contractor
Address

KEY PLAN

ISSUES / REVISIONS

NO.	DESCRIPTION	DATE

FILE LOG

ACTIVITY	REFERENCE	BY
Manager		
Design		GSD
Draw		
Draw		
Draw		CA
Check		GSD

REGISTRATION

JOB No 52010300

CONSTRUCTION PACKAGE

ISSUED FOR CONSTRUCTION (FINAL) APRIL 8, 2003

SYMBOLS, NOTES AND ABBREVIATIONS

MP.00

© Leo A Daly Company 2005

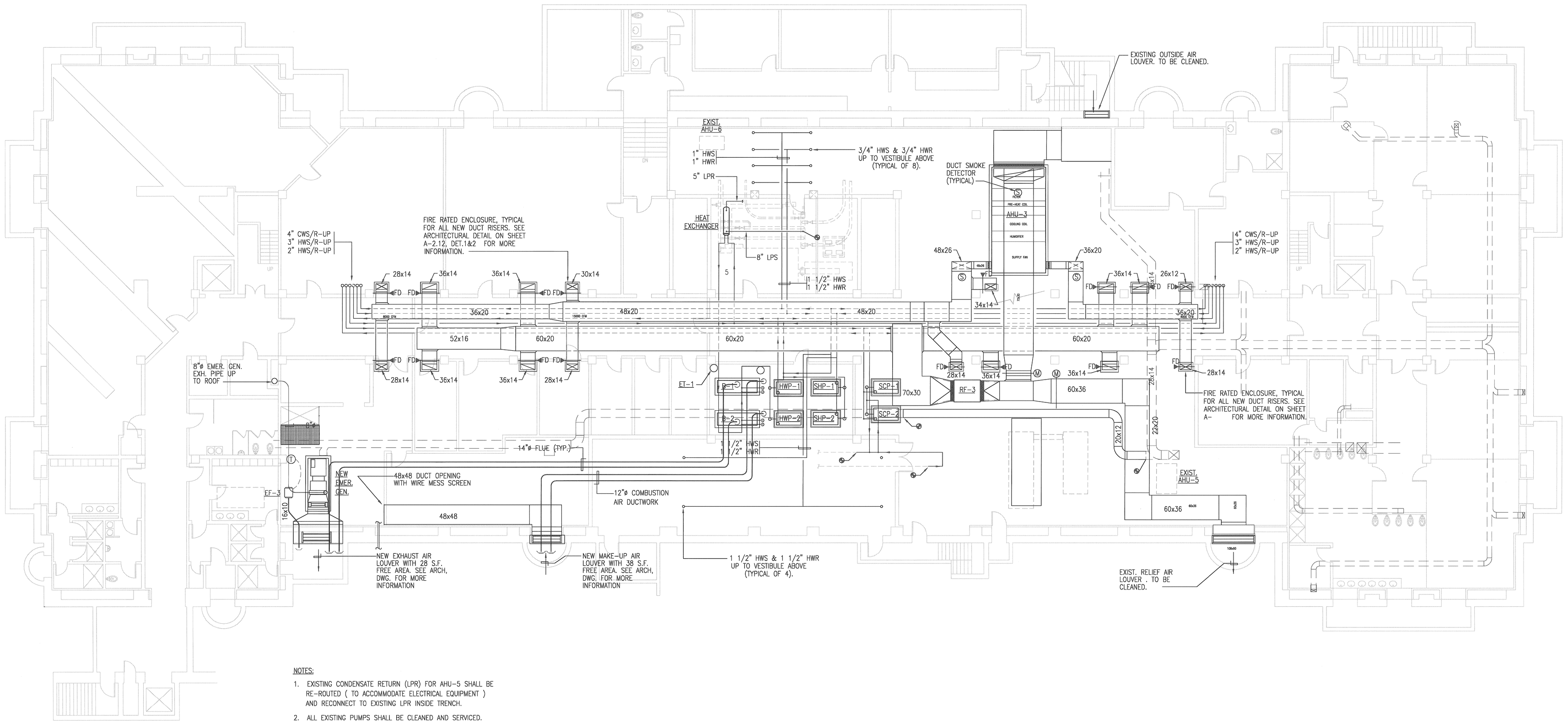

NOTES:

1. EXISTING CONDENSATE RETURN (LPR) FOR AHU-5 SHALL BE RE-ROUTED (TO ACCOMMODATE ELECTRICAL EQUIPMENT) AND RECONNECT TO EXISTING LPR INSIDE TRENCH.
2. ALL EXISTING PUMPS SHALL BE CLEANED AND SERVICED. ALL LEAKING PIPES SHALL BE FIXED OR REPLACED AS REQUIRED.

Interior Improvements to DC Superior Courts Building 'B'

409 E Street, NW
Washington, DC 20001

U.S. General Services Administration
301 7th Street, SW, Room 2021
Washington, DC 20407

LEO A DALY
PLANNING ARCHITECTURE ENGINEERING INTERIORS
EST. 1915

1201 Connecticut Ave, NW
Washington DC 20036 USA
Tel 202-861-4600 Fax 202-872-8530

Dalco INCORPORATED
10005 Old Columbia Road Suite L261
Columbia, MD 21046
Tel: 410-290-8827
Fax: 410-290-8812

Contractor
Address

KEY PLAN

ISSUES / REVISIONS

NO.	DESCRIPTION	DATE

FILE LOG

ACTIVITY	REFERENCE	BY
Manager		JL
Design		GSD
Draw		
Draw		
Draw		GSD
Check		JCA

REGISTRATION

JOB No 52010300

CONSTRUCTION PACKAGE

ISSUED FOR CONSTRUCTION (FINAL) APRIL 8, 2003

MECHANICAL BASEMENT PLAN

M1.00

© Leo A Daly Company 2003

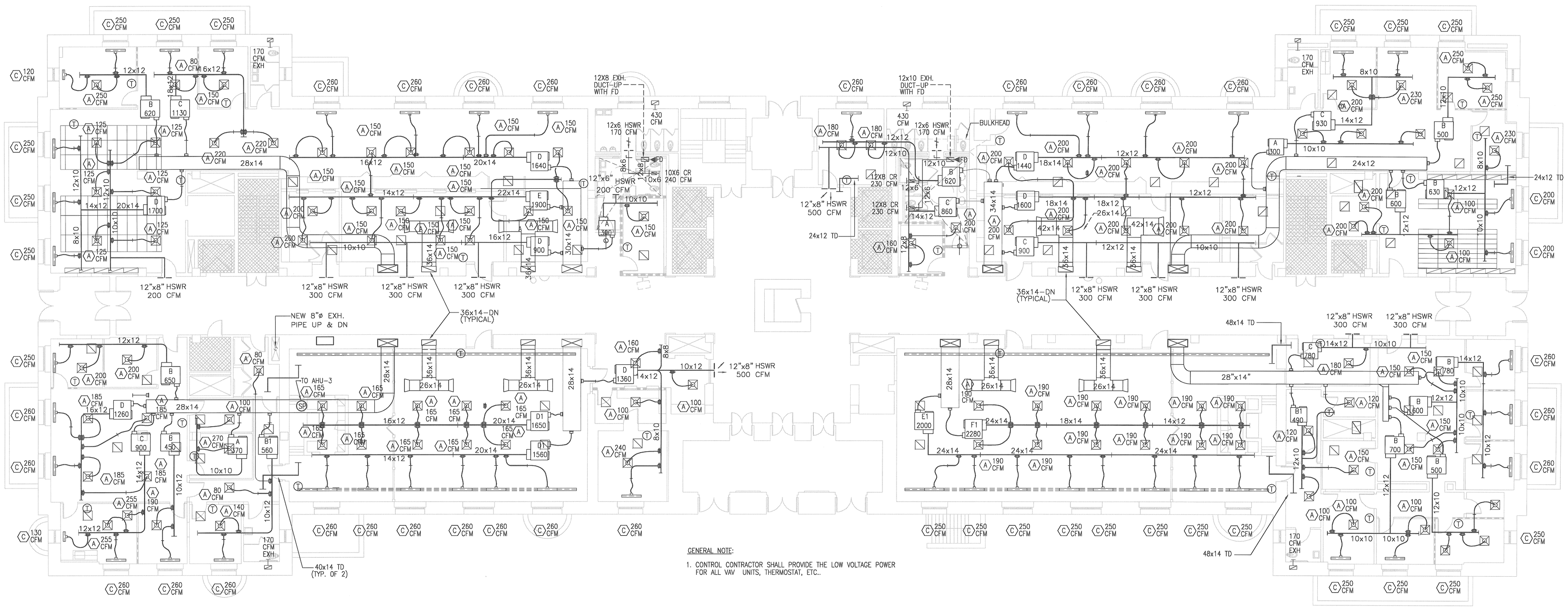

GENERAL NOTE:

1. CONTROL CONTRACTOR SHALL PROVIDE THE LOW VOLTAGE POWER FOR ALL VAV UNITS, THERMOSTAT, ETC..

Interior Improvements to DC Superior Courts Building 'B'

409 E Street, NW
Washington, DC 20001

U.S. General Services Administration
301 7th Street, SW, Room 2021
Washington, DC 20407

LEO A DALY
PLANNING ARCHITECTURE ENGINEERING INTERIORS
EST. 1915

1201 Connecticut Ave, NW
Washington DC 20036 USA
Tel 202-861-4600 Fax 202-872-8530

Dalco
10005 Old Columbia Road Suite L261
Columbia, MD 21046
Tel: 410-290-8827
Fax: 410-290-8812

Contractor
Address

KEY PLAN

ISSUES / REVISIONS

NO.	DESCRIPTION	DATE

FILE LOG

ACTIVITY	REFERENCE	BY
Manager		
Design		CSD
Draw		
Draw		
Draw		KA
Check		CSD

REGISTRATION

JOB No 52010300

CONSTRUCTION PACKAGE

ISSUED FOR CONSTRUCTION (FINAL) APRIL 8, 2003

MECHANICAL
FIRST FLOOR PLAN

M1.01

© Leo A Daly Company 2003

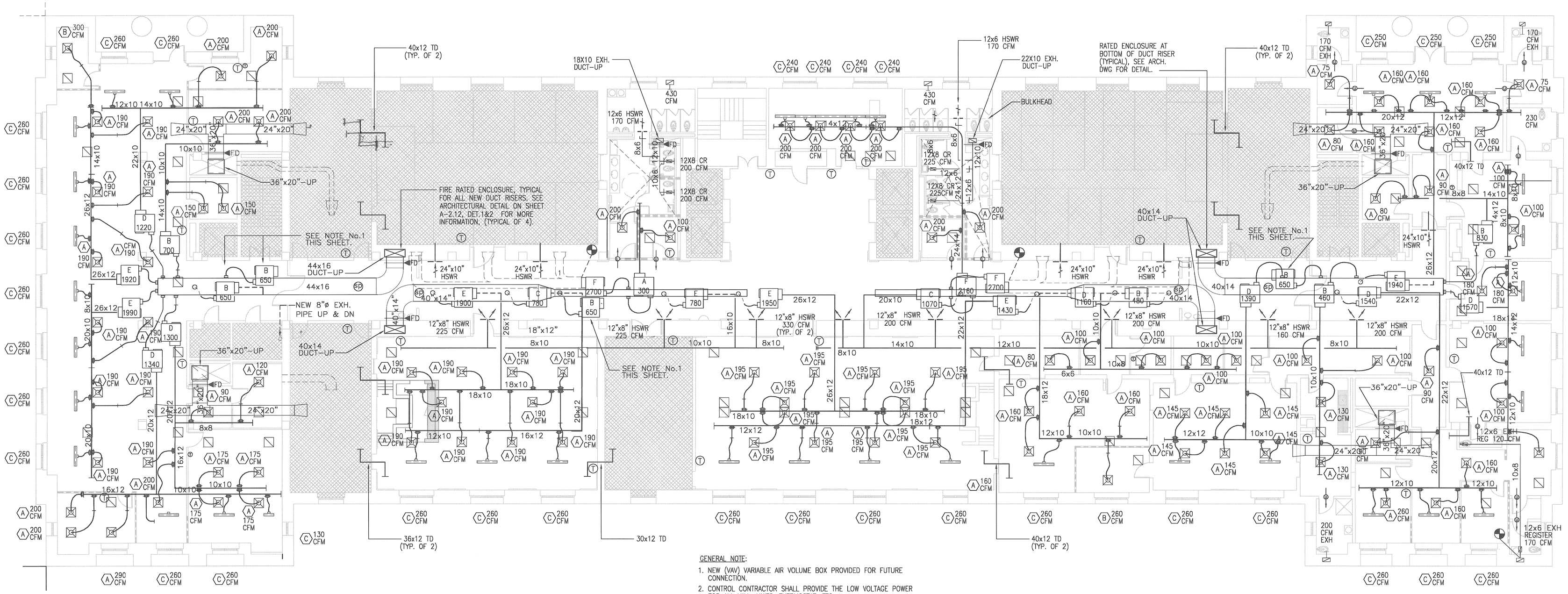

GENERAL NOTE:

1. NEW (VAV) VARIABLE AIR VOLUME BOX PROVIDED FOR FUTURE CONNECTION.
2. CONTROL CONTRACTOR SHALL PROVIDE THE LOW VOLTAGE POWER FOR ALL VAV UNITS, THERMOSTAT, ETC..
3. ALL PERIMETER LINEAR DIFFUSERS ARE SIDE WALL MOUNTED AND SHALL BE ADJUSTED TO DIRECT SUPPLY AIR 15° (UPPER SLOT) AND 30° (LOWER SLOT) TOWARDS THE WINDOW. SEE ARCHITECTURAL DRAWING A5.31 DETAIL 2 FOR MORE INFORMATION.

Interior Improvements to DC Superior Courts Building 'B'

409 E Street, NW
Washington, DC 20001

U.S. General Services Administration
301 7th Street, SW, Room 2021
Washington, DC 20407

LEO A DALY
PLANNING ARCHITECTURE ENGINEERING INTERIORS
EST. 1915

1201 Connecticut Ave, NW
Washington DC 20036 USA
Tel 202-861-4600 Fax 202-872-8530

Dalco INCORPORATED
10005 Old Columbia Road Suite L261
Columbia, MD 21046
Tel: 410-290-8827
Fax: 410-290-8812

Contractor
Address

KEY PLAN

ISSUES / REVISIONS

NO.	DESCRIPTION	DATE

FILE LOG

ACTIVITY	REFERENCE	BY
Manager		
Design		CSD
Draw		
Draw		
Draw		KA
Check		CSD

REGISTRATION

JOB No 52010300

CONSTRUCTION PACKAGE

ISSUED FOR CONSTRUCTION (FINAL) APRIL 8, 2003

MECHANICAL
SECOND FLOOR PLAN

M1.02

© Leo A Daly Company 2003

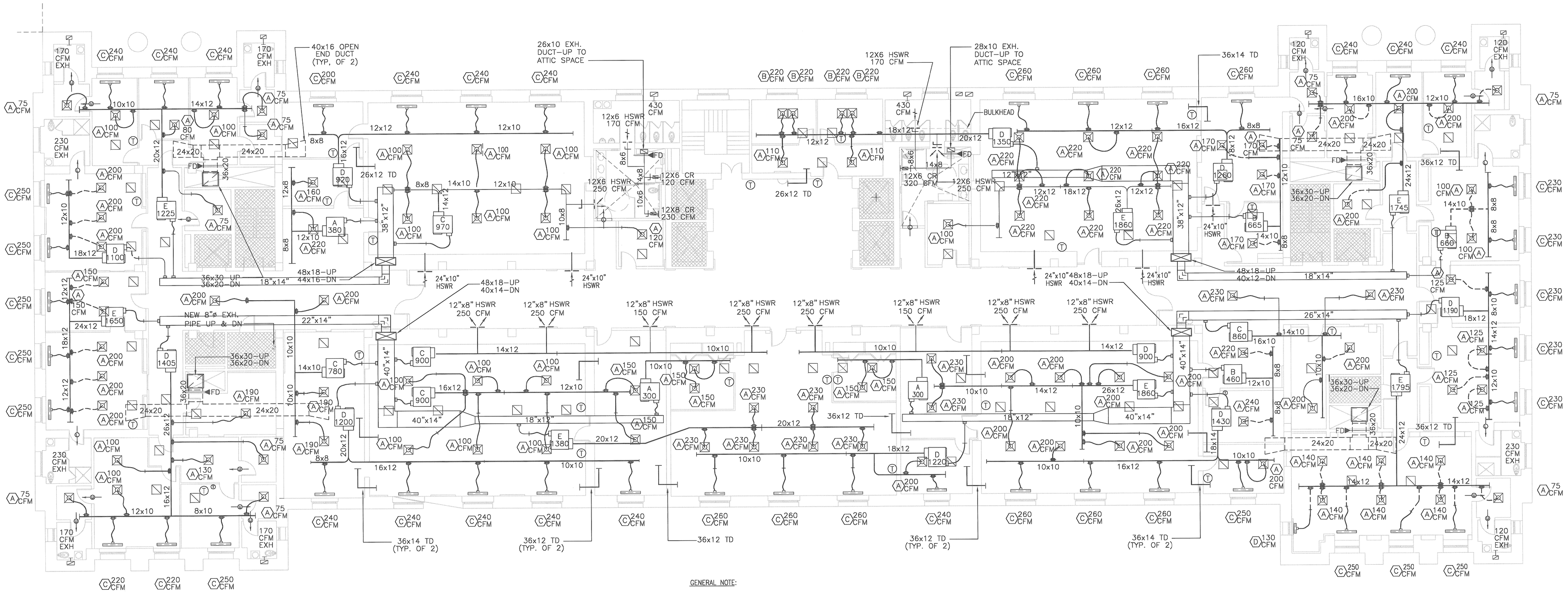

GENERAL NOTE:

1. CONTROL CONTRACTOR SHALL PROVIDE THE LOW VOLTAGE POWER FOR ALL VAV UNITS, THERMOSTAT, ETC..

Interior Improvements to DC Superior Courts Building 'B'

409 E Street, NW
Washington, DC 20001

U.S. General Services Administration
301 7th Street, SW, Room 2021
Washington, DC 20407

LEO A DALY
1201 Connecticut Ave, NW
Washington DC 20036 USA
Tel 202-861-4600 Fax 202-872-8530

Dalco
10005 Old Columbia Road Suite L261
Columbia, MD 21046
Tel: 410-290-8827
Fax: 410-290-8812

Contractor
Address

KEY PLAN

ISSUES / REVISIONS

NO.	DESCRIPTION	DATE

FILE LOG

ACTIVITY	REFERENCE	BY
Manager		
Design		CJKD
Draw		
Draw		
Draw		KA
Check		CJKD

REGISTRATION

JOB No 52010300

CONSTRUCTION PACKAGE

ISSUED FOR CONSTRUCTION (FINAL) APRIL 8, 2003

MECHANICAL
THIRD FLOOR PLAN

M1.03

© Leo A Daly Company 2003

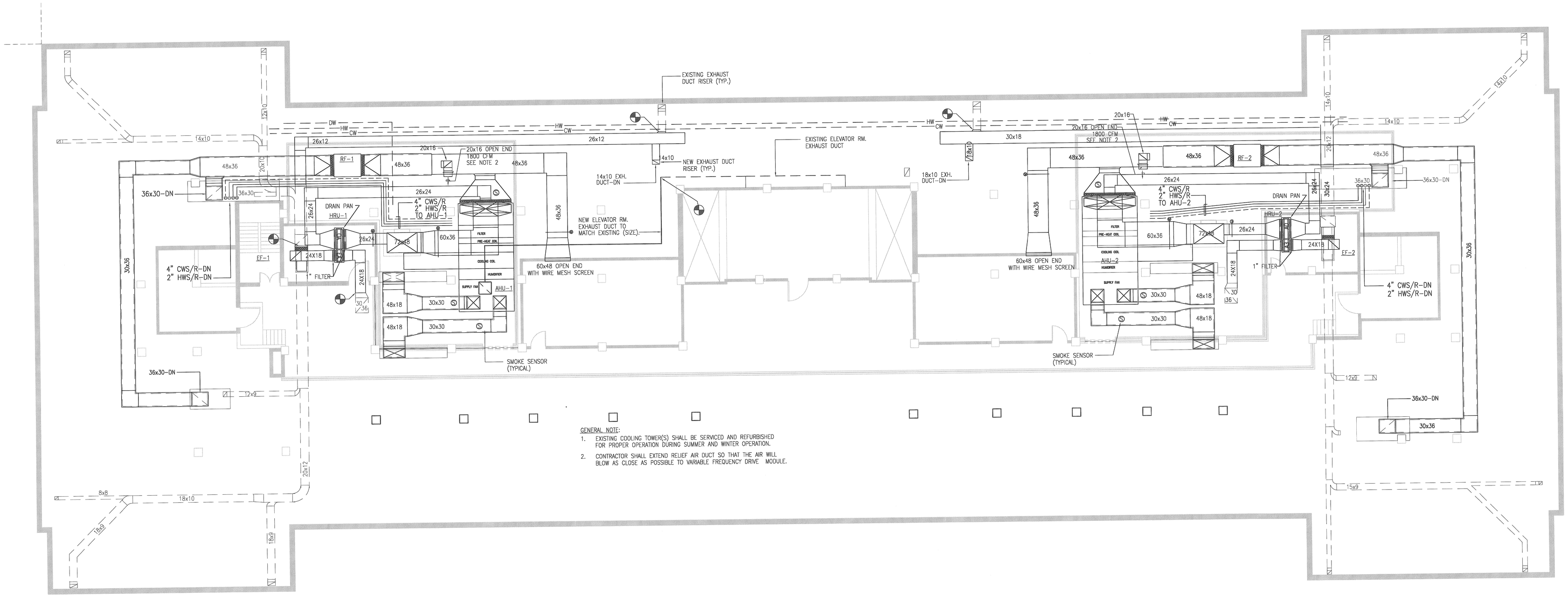

GENERAL NOTE:

1. EXISTING COOLING TOWER(S) SHALL BE SERVICED AND REFURBISHED FOR PROPER OPERATION DURING SUMMER AND WINTER OPERATION.
2. CONTRACTOR SHALL EXTEND RELIEF AIR DUCT SO THAT THE AIR WILL BLOW AS CLOSE AS POSSIBLE TO VARIABLE FREQUENCY DRIVE MODULE.

Interior Improvements to DC Superior Courts Building 'B'

409 E Street, NW
Washington, DC 20001

U.S. General Services Administration
301 7th Street, SW, Room 2021
Washington, DC 20407

LEO A DALY
PLANNING ARCHITECTURE ENGINEERING INTERIORS
EST. 1915
1201 Connecticut Ave, NW
Washington DC 20036 USA
Tel 202-861-4600 Fax 202-872-8530

Dalco
10005 Old Columbia Road Suite L261
Columbia, MD 21046
Tel: 410-290-8827
Fax: 410-290-8812

Contractor
Address

KEY PLAN

ISSUES / REVISIONS

NO.	DESCRIPTION	DATE

FILE LOG

ACTIVITY	REFERENCE	BY
Manager		
Design		GSD
Draw		
Draw		
Draw		EA
Check		GSD

REGISTRATION

JOB No 52010300

CONSTRUCTION PACKAGE

ISSUED FOR CONSTRUCTION (FINAL) APRIL 8, 2003

MECHANICAL
ATTIC FLOOR PLAN

M1.04

© Leo A Daly Company 2003

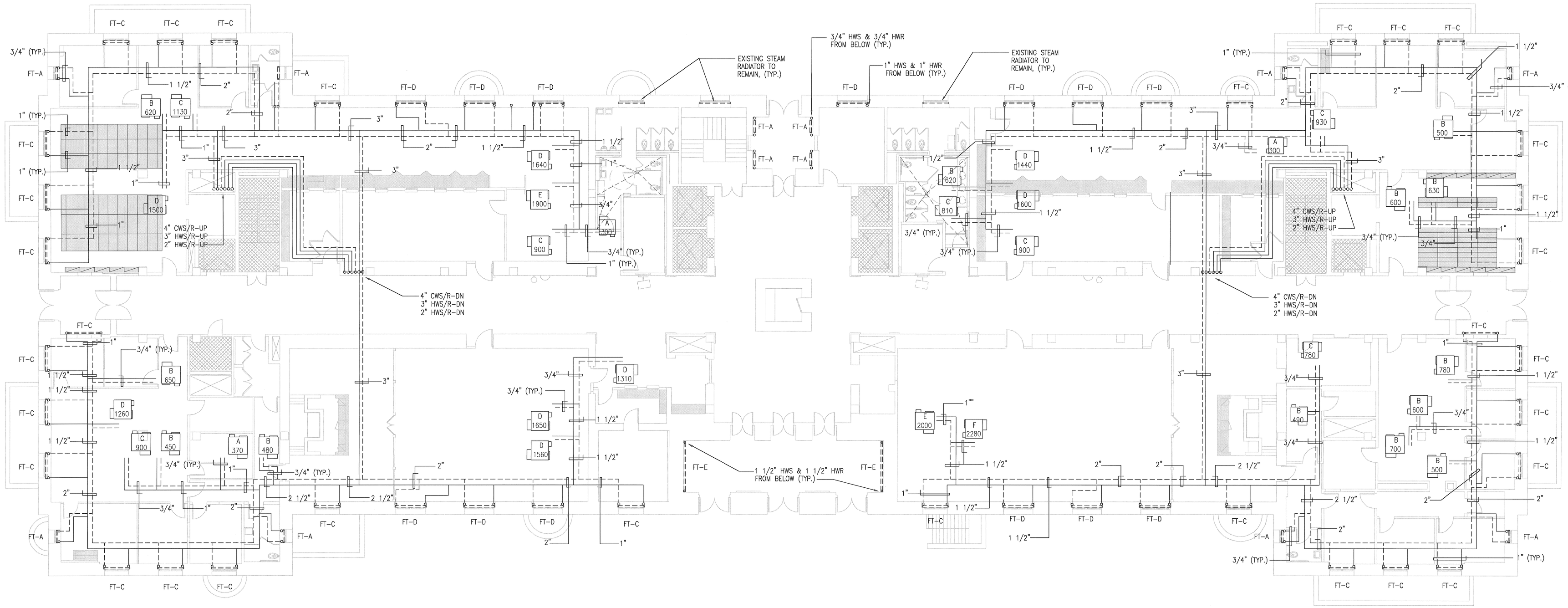

Interior Improvements to DC Superior Courts Building 'B'

409 E Street, NW
Washington, DC 20001

U.S. General Services Administration
301 7th Street, SW, Room 2021
Washington, DC 20407

LEO A DALY
PLANNING ARCHITECTURE ENGINEERING INTERIORS
EST. 1915

1201 Connecticut Ave, NW
Washington DC 20036 USA
Tel 202-861-4600 Fax 202-872-8530

Dalco INCORPORATED

10005 Old Columbia Road Suite L261
Columbia, MD 21046
Tel: 410-290-8827
Fax: 410-290-8812

Contractor
Address

KEY PLAN

ISSUES / REVISIONS

NO.	DESCRIPTION	DATE

FILE LOG

ACTIVITY	REFERENCE	BY
Manager		
Design		GSD
Draw		
Draw		
Draw		KA
Check		GSD

REGISTRATION

JOB No 52010300

CONSTRUCTION PACKAGE

ISSUED FOR CONSTRUCTION
(FINAL) APRIL 8, 2003

HEATING
FIRST FLOOR PLAN

M2.01

© Leo A Daly Company 2003

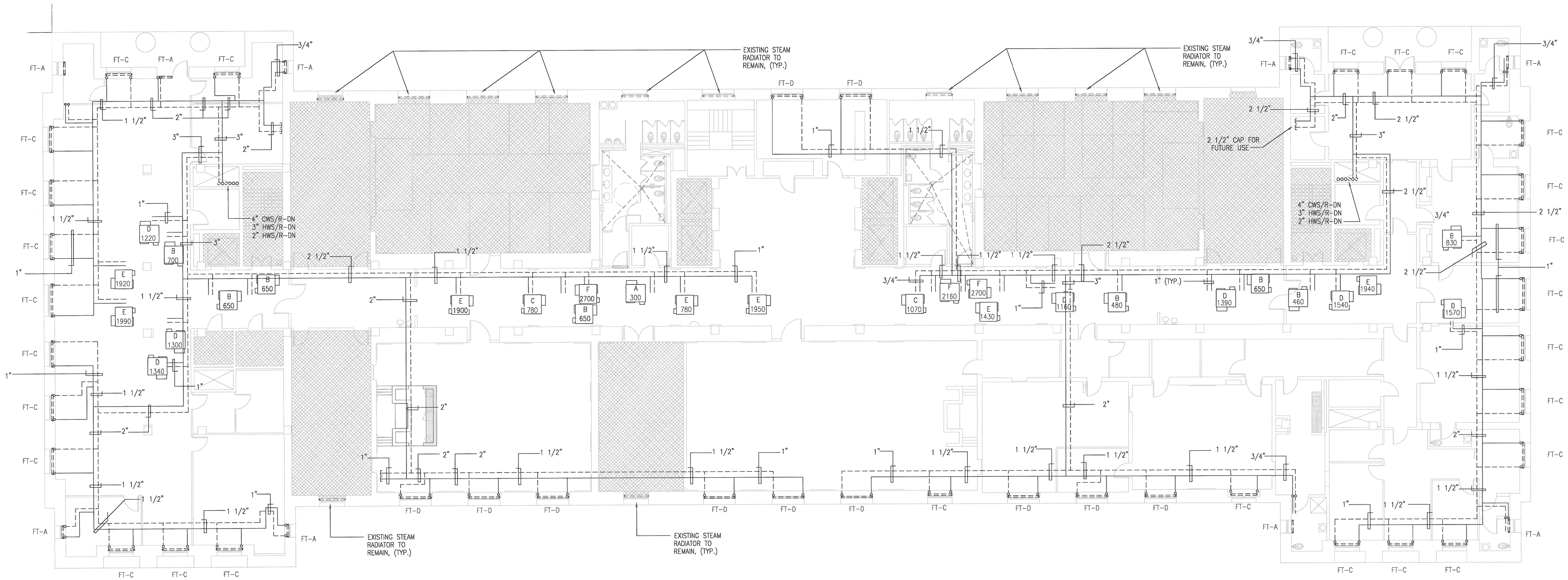

Interior Improvements to DC Superior Courts Building 'B'

409 E Street, NW
Washington, DC 20001

U.S. General Services Administration
301 7th Street, SW, Room 2021
Washington, DC 20407

LEO A DALY
PLANNING ARCHITECTURE ENGINEERING INTERIORS
LEI: M/B

1201 Connecticut Ave, NW
Washington DC 20036 USA
Tel 202-861-4600 Fax 202-872-8530

Dalco Incorporated
10005 Old Columbia Road Suite L261
Columbia, MD 21046
Tel: 410-290-8827
Fax: 410-290-8812

Contractor
Address

KEY PLAN

ISSUES / REVISIONS

NO.	DESCRIPTION	DATE

FILE LOG

ACTIVITY	REFERENCE	BY
Manager		
Design		GSD
Draw		
Draw		
Draw		KA
Check		GSD

REGISTRATION

JOB No 52010300

CONSTRUCTION PACKAGE

ISSUED FOR CONSTRUCTION (FINAL) APRIL 8, 2003

HEATING
SECOND FLOOR PLAN

M2.02

© Leo A Daly Company 2003

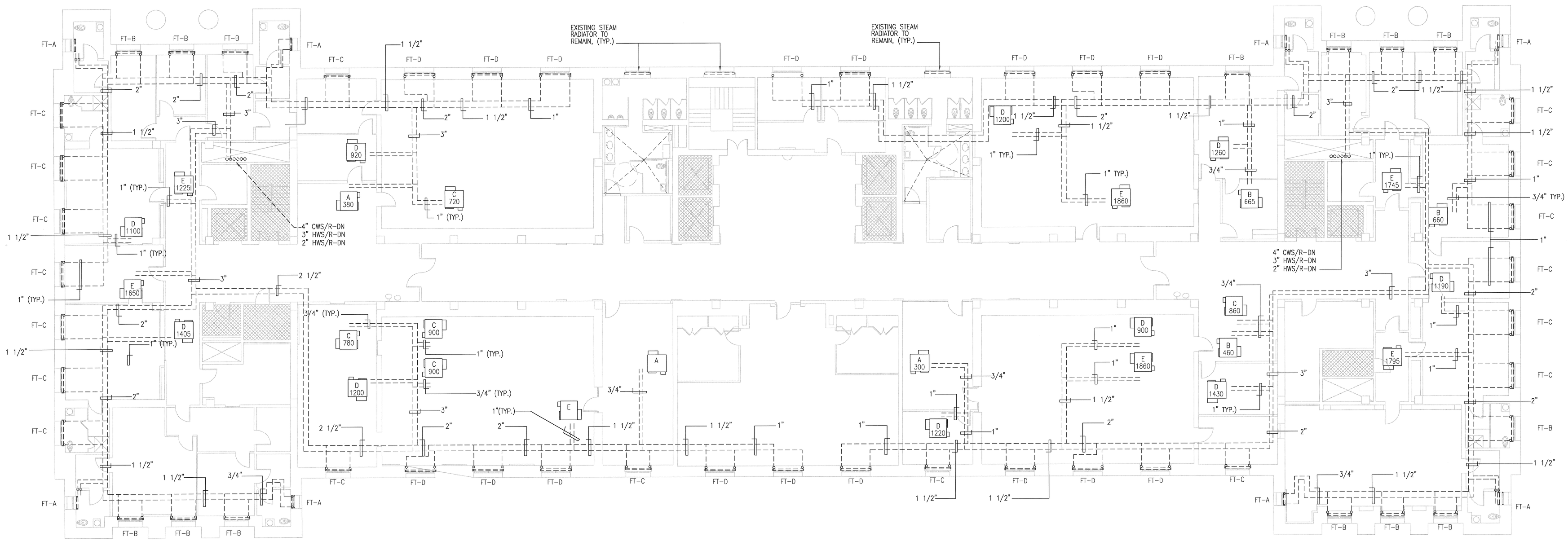

Interior Improvements to DC Superior Courts Building 'B'

409 E Street, NW
Washington, DC 20001

U.S. General Services Administration
301 7th Street, SW, Room 2021
Washington, DC 20407

LEO A DALY
1201 Connecticut Ave, NW
Washington DC 20036 USA
Tel 202-861-4600 Fax 202-872-8530

Dalco
10005 Old Columbia Road Suite L261
Columbia, MD 21046
Tel: 410-290-8827
Fax: 410-290-8812

Contractor
Address

KEY PLAN

ISSUES / REVISIONS

NO.	DESCRIPTION	DATE

FILE LOG

ACTIVITY	REFERENCE	BY
Manager		
Design		CND
Draw		
Draw		
Draw		KA
Check		CND

REGISTRATION

JOB No 52010300

CONSTRUCTION PACKAGE

ISSUED FOR CONSTRUCTION (FINAL) APRIL 8, 2003

HEATING
THIRD FLOOR PLAN

M2.03

© Leo A Daly Company 2003

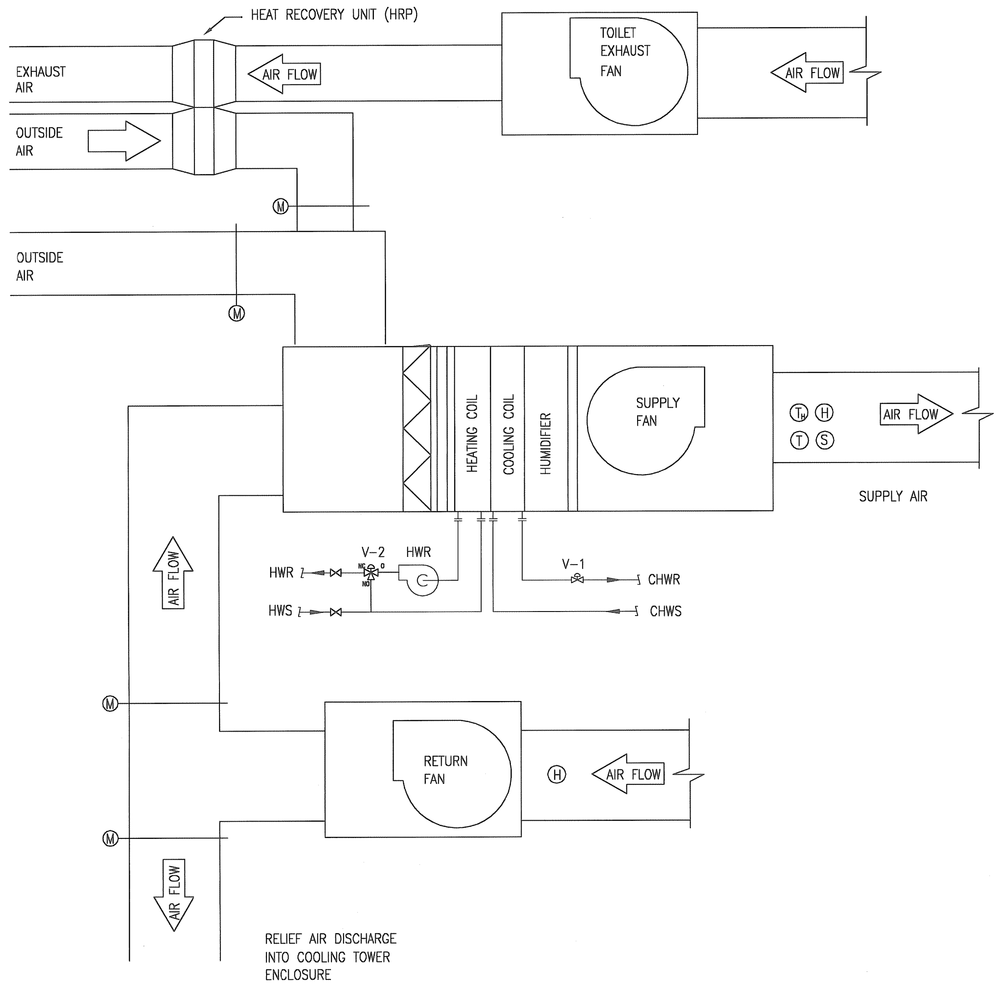

HEAT RECOVERY SCHEME AT AHU'S IN THE ATTIC

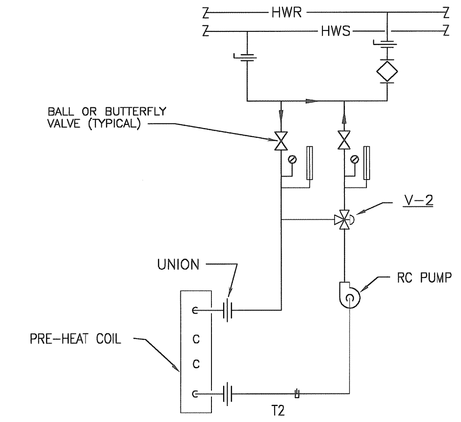

AHU PRE-HEAT COIL FLOW DIAGRAM

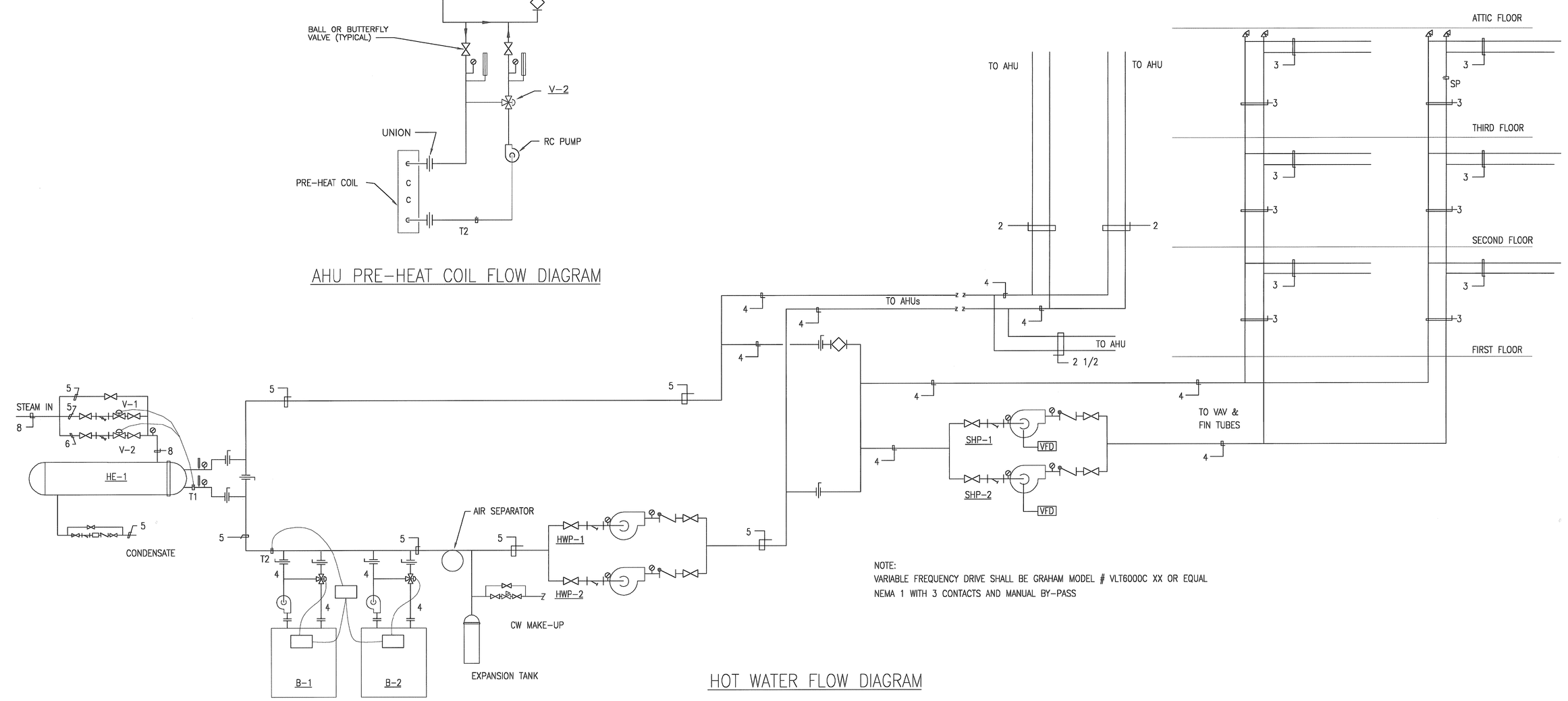

NOTE:
VARIABLE FREQUENCY DRIVE SHALL BE GRAHAM MODEL # VLT6000C XX OR EQUAL
NEMA 1 WITH 3 CONTACTS AND MANUAL BY-PASS

HOT WATER FLOW DIAGRAM

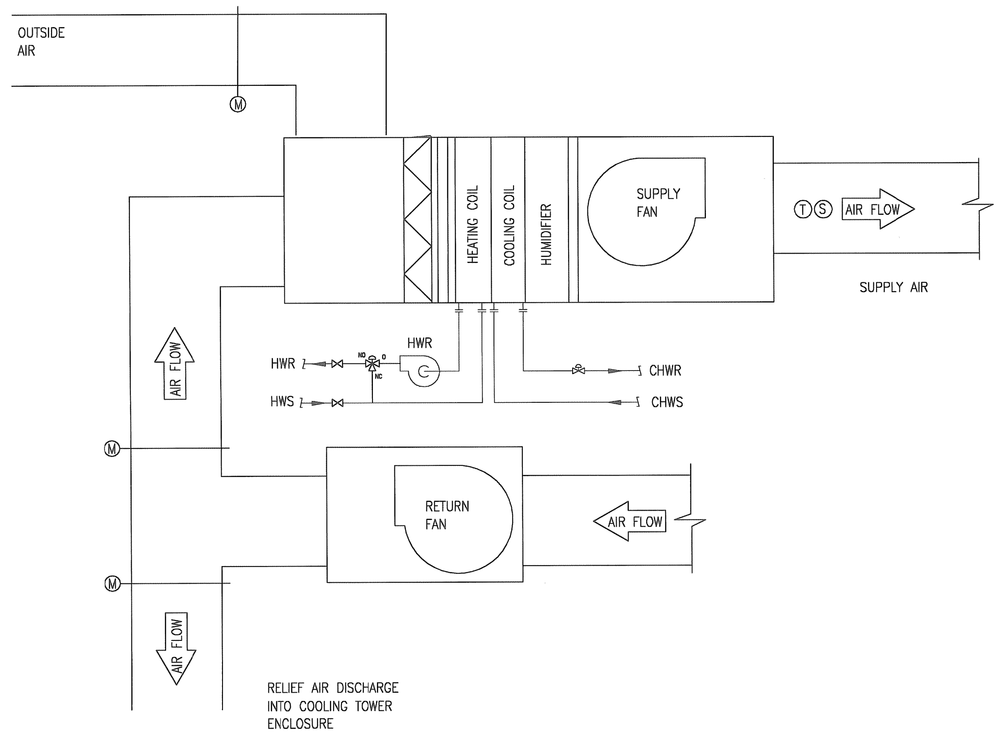

AHU SCHEME AT THE BASEMENT

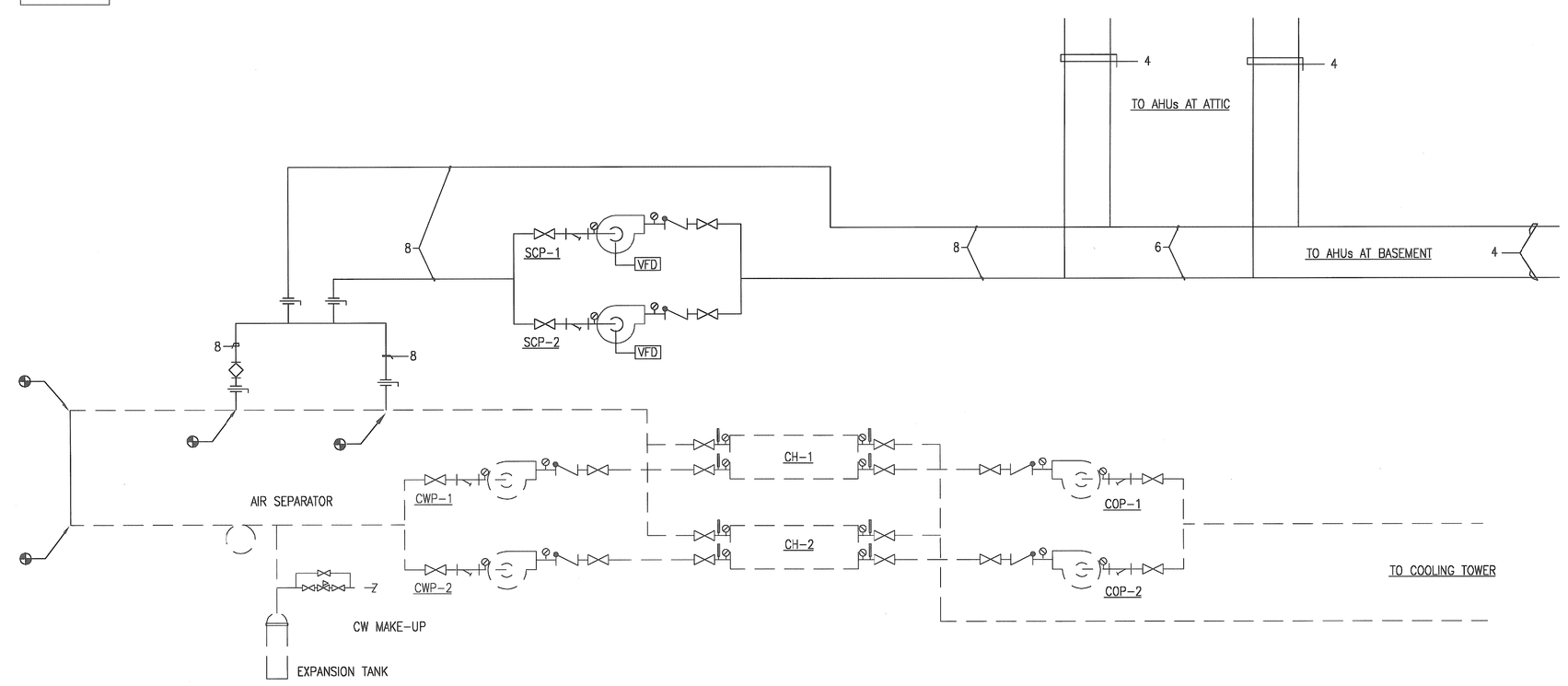

CHILLED WATER FLOW DIAGRAM

Interior Improvements to DC Superior Courts Building 'B'

409 E Street, NW
Washington, DC 20001

U.S. General Services Administration
301 7th Street, SW, Room 2021
Washington, DC 20407

LEO A DALY
PLANNING ARCHITECTURE ENGINEERING INTERIORS
EST. 1915
1201 Connecticut Ave, NW
Washington DC 20036 USA
Tel 202-861-4600 Fax 202-872-8530

Dalco INCORPORATED
10005 Old Columbia Road Suite L261
Columbia, MD 21046
Tel: 410-290-8827
Fax: 410-290-8812

Contractor
Address

KEY PLAN

ISSUES / REVISIONS

NO.	DESCRIPTION	DATE

FILE LOG

ACTIVITY	REFERENCE	BY
Manager		
Designer		CSD
Draw		
Draw		
Draw		KA
Check		CSD

REGISTRATION

JOB No 52010300

CONSTRUCTION PACKAGE

ISSUED FOR CONSTRUCTION (FINAL) APRIL 8, 2003

MECHANICAL FLOW DIAGRAM & SEQUENCE OF OPERATION

M3.01

© Leo A Daly Company 2003

HUMIDIFIER SCHEDULE

TAG	LOCATION	CAPACITY LBS/HR	Amp	KW	ELEC DATA V/P/Hz	MANUFACTURER / MODEL #
HUM-1	AHU-1	200	137.8	49.6	208/3/60	STULZ MODEL SMU 603
HUM-2	AHU-2	200	137.8	49.6	208/3/60	STULZ MODEL SMU 603
HUM-3	AHU-3	200	137.8	49.6	208/3/60	STULZ MODEL SMU 603

HOT WATER FIN TUBE RADIATION

TAG	ACTIVE LENGHT	MIN VEL FPS	MIN GPM	BTUH/LF	EWT °F	ENCLOSURE TYPE	MANUFACTURER / MODEL #
FT-A	2'-0"	3	3	820	180	VULCAN FRI 212 16-GAUGE CABINET PROVIDE ENCLOSURE WALL TO WALL	VULCAN FRI 212
FT-B	4'-0"	3	4	820	180		
FT-C	5'-0"	3	5	820	180		
FT-D	6'-0"	3	5	820	180		
FT-E	8'-0"	3	8	820	180		

FAN SCHEDULE

TAG	SERVICE	TYPE	CFM	E.S.P. IN WC	MOTOR HP	MOTOR VOLTS/ PHASE	DAMPER GRAV / MOTOR	CONTROL	MANUFACTURER / MODEL #
RF-1	AHU-1	INLINE	26,000	1.00	15	208/3/60	- -	DDC	GREENHECK QEI SEE NOTE 1, 2
RF-2	AHU-2	INLINE	26,000	1.00	15	208/3/60	- -	DDC	GREENHECK QEI SEE NOTE 1, 2
RF-3	AHU-3	INLINE	26,400	1.00	15	208/3/60	- -	DDC	GREENHECK QEI SEE NOTE 1, 2
EF-1	TOILET	UTILITY	4450	1.25	2	208/3/60	- -	DDC	GREENHECK SWB SEE NOTE 1
EF-2	TOILET	UTILITY	5140	1.25	2	208/3/60	- -	DDC	GREENHECK SWB SEE NOTE 1
EF-3	GEN. RM.	INLINE	1000	0.375	1/4	120/1/60	- -	DDC	GREENHECK BSQ 100-4 SEE NOTE 1

NOTES:
1) PROVIDE SPRING VIBRATION ISOLATORS
2) VARIABLE FREQUENCY DRIVE

PUMP SCHEDULE

TAG	SERVICE	TYPE	GPM	HEAD IN FT	MOTOR HP	MOTOR VOLTS/ PHASE	CONTROL	MANUFACTURER / MODEL #
SCP-1	CW SYSTEM	END SUCTION	840	55	20	208/3/60	DDC	TACO TYPE FE4008
SCP-2	STAND-BY	END SUCTION	840	55	20	208/3/60	DDC	TACO TYPE FE4008
HWP-1	HW SYSTEM	END SUCTION	420	70	15	208/3/60	DDC	TACO TYPE FE3010
HWP-2	STAND-BY	END SUCTION	420	70	15	208/3/60	DDC	TACO TYPE FE3010
SHP-1	SECONDARY	END SUCTION	260	55	10	208/3/60	DDC	TACO TYPE FE2510
SHP-2	STAND-BY	END SUCTION	260	55	10	208/3/60	DDC	TACO TYPE FE2510
RCP-1	AHU-1	INLINE	30	25	1	208/3/60	INTERLOCK WITH AHU-1 AND OA TEMPERATURE	TACO TYPE VI 1506
RCP-2	AHU-2	INLINE	30	25	1	208/3/60	INTERLOCK WITH AHU-2 AND OA TEMPERATURE	TACO TYPE VI 1506
RCP-3	AHU-3	INLINE	43	25	1	208/3/60	INTERLOCK WITH AHU-3 AND OA TEMPERATURE	TACO TYPE VI 1506

HOT WATER BOILER SCHEDULE

TAG	FUEL	HEATING CAPACITY INPUT MBH	HEATING CAPACITY OUTPUT MBH	WATER FLOW GPM	WATER FLOW PD (FT)	TEMP RISE	PROTOTYPE
B-1, B-2	NAT GAS	1950	1638	100	18	30°F	RBI DOMINATOR SERIES MODEL DB1950

NOTES:
1. UNIT TO HAVE 4-STAGE FIRING OPERATION.
2. BOILER SHALL BE PROVIDED WITH INLINE CIRCULATING PUMP, 1 HP @ 208/3/60 AND A 15 AMP CKT @ 115/1/60 FOR CONTROL AND BOILER OPERATION..

CABINET UNIT HEATERS AND UNIT HEATERS

TAG	MANUFACTURER MODEL #	TYPE	SERVICE	FAN ACFM MAX	FAN MOTOR HP	HEATING COIL MBH TOTAL	HEATING COIL E.A.T. DB	HEATING COIL E.W.T.	HEATING COIL L.W.T.	HEATING COIL GPM	PIPE SIZE	VOLTS/ PHASE	REMARKS
CUH - 3	STERLING / F-1000-02	WALL MOUNTED	TOILET RM	230	1/10	8.0	60	190	160	0.5	3/4"	115/1	1,2,3
UH - 1	TRANE MODEL 38-S	CEILING HUNG	MECHANICAL RM	540	1/20	14	60	190	160	1.4	3/4"	115/1	1,2,3
UH - 2	TRANE MODEL 38-S	CEILING HUNG	MECHANICAL RM	540	1/20	14	60	190	160	1.4	3/4"	115/1	1,2,3

NOTES:
1. MECH CONTRACTOR TO FURNISH ELECTRIC DISCONNECT. ELECTRICAL CONTRACTOR SHALL INSTALL DISCONNECT.
2. PROVIDE UNIT MOUNTED RETURN AIR THERMOSTAT.
3. COORDINATE COLOR WITH ARCHITECT.

AIR HANDLING UNIT SCHEDULES

TAG	LOCATION	SUPPLY FAN CFM (1)	SUPPLY FAN O.A. CFM (MIN.)	SUPPLY FAN ESP (1) IN WC	SUPPLY FAN MOTOR HP	COOLING COIL MBH CAPACITY TOTAL	COOLING COIL MBH CAPACITY SENS	COOLING COIL L.A.T. DBF	COOLING COIL L.A.T. WBF	COOLING COIL GPM	COOLING COIL E.W.T.	COOLING COIL W.P.D. FT	HEATING COIL MBH	HEATING COIL GPM	HEATING COIL EAT	HEATING COIL EWT	HEATING COIL W.P.D. FT	ELECTRICAL V/P/H	MANUFACTURER / MODEL #
AHU-1	ATTIC	31,000	6,500	1.75	40	1325	1063	52.6°	52.2°	265	45	20	450	30	38°	180°	10	208/3/60	CARRIER AHU BUILDER SIZE 61
AHU-2	ATTIC	31,000	6,500	1.75	40	1325	1063	52.6°	52.2°	265	45	20	450	30	38°	180°	10	208/3/60	CARRIER AHU BUILDER SIZE 61
AHU-3	BASEMENT	30,000	8,900	1.75	40	1405	1059	52.8°	52.4°	281	45	20	650	43	38°	180°	10	208/3/60	CARRIER AHU BUILDER SIZE 61

NOTES:
1) EXTERNAL STATIC PRESSURES DO NOT INCLUDE INTERNAL COMPONENT STATIC PRESSURE LOSS.
2) OUTDOOR AIR ECONOMIZER
3) PROVIDE AIR MONITOR FAN INLET AIRFLOW TRAVERSE PROBE.

AIR TO AIR HEAT EXCHANGER

TAG	SERVICE	CONDITION	OUTSIDE AIR CFM	OUTSIDE AIR EAT °Fdb/°Fwb	OUTSIDE AIR LAT °Fdb/°Fwb	OUTSIDE AIR E.S.P. IN WC	OUTSIDE AIR BTUH	EXHAUST AIR CFM	EXHAUST AIR EAT °Fdb/°Fwb	EXHAUST AIR LAT °Fdb/°Fwb	EXHAUST AIR E.S.P. IN WC	EXHAUST AIR BTUH	MAX FACE VELOCITY FPM	MANUFACTURER / MODEL #
HRP-1	AHU-1	SUMMER	6500	95.0/78.0	88.3/76.3	0.54	44,730	4500	80.0/66.6	90.1/69.8	0.54	44,730	450	HEATPIPE TECHNOLOGIES
		WINTER		12.0/11.0	41.4/30.6	0.54	190,740		75.0/56.5	36.0/36.0	0.54	190,740		
HRP-2	AHU-2	SUMMER	6500	95.0/78.0	88.3/76.3	0.54	44,730	5140	80.0/66.6	90.1/69.8	0.54	44,730	450	HEATPIPE TECHNOLOGIES
		WINTER		12.0/11.0	41.4/30.6	0.54	190,740		75.0/56.5	36.0/36.0	0.54	190,740		

STEAM TO WATER HEAT EXCHANGER

TAG	SERVICE	WATER SIDE GPM	WATER SIDE EWT °F	WATER SIDE LWT °F	WATER SIDE BTUH	WATER SIDE WPD FT	STEAM SIDE INITIAL PRES PSI	STEAM SIDE FINAL PRES PSI	STEAM SIDE CAPACITY LBS/HR	STEAM SIDE CONTROL VALVE LBS/HR	CONDENSATE SIDE TRAP CAPACITY LBS/HR	CONDENSATE SIDE PRESSURE DIFFERENTIAL	MANUFACTURER / MODEL #
HE-1	HOT WATER	410	160	180	4,100,000	15	15	5	4225	V-1 = 1500 LBS/HR V-2 = 2725 LBS/HR	12675	5 PSI	BELL & GOSSETT

NOTES:
1) CONDENSATE TRAP SHALL BE FLOAT AND THERMOSTATIC TYPE

SERIES FAN POWERED TERMINAL BOX SCHEDULE

MARK	MAX. BOX CFM 0" ESP	INLET SIZE	PRIMARY CFM MIN.	PRIMARY CFM MAX.	FAN CFM MIN.	FAN CFM MAX.	FAN CFM E.S.P.	FAN HP	ELEC DATA	HOT WATER HEATING COIL DATA BTUH	EA(°F)	EWT(°F)	GPM	WTR.PD.	AIR PD.	PIPE RUNOUT IN/OUT	TYPE	REMARKS (PROTOTYPE)
A	500	6"	90	400	300	400	0.30	1/10	120/1/60	11230	64°	180°	1.12	5	0.15	3/4"	SERIES	CARRIER MODEL 45J, SIZE 2
B	900	8"	170	700	450	700	0.40	1/4		19600	64°	180°	2.00	5	0.15	3/4"	SERIES	CARRIER MODEL 45J, SIZE 3
C	1400	10"	250	1100	780	1100	0.45	1/4		30880	64°	180°	3.10	5	0.15	3/4"	SERIES	CARRIER MODEL 45J, SIZE 4
D	2100	12"	360	1680	300	1680	0.45	1/2	208/3/60	34000	64°	180°	3.40	5	0.15	1"	SERIES	CARRIER MODEL 45J, SIZE 5
E	2500	14"	500	2000	450	2000	0.45	3/4		47000	64°	180°	4.70	5	0.15	1"	SERIES	CARRIER MODEL 45J, SIZE 6
F	4000	16"	650	3000	780	3000	0.45	(2) 3/4		59800	64°	180°	5.96	5	0.15	1 1/2"	SERIES	CARRIER MODEL 45J, SIZE 7
B1	875	8"	280	700	485	700	0.40	1/4	120/1/60	13300	64°	180°	1.35	5	0.15	3/4"	SERIES	CARRIER MODEL 45K, SIZE 3
C1	1300	10"	420	1040	720	1040	0.45	1/4		21500	64°	180°	2.15	5	0.15	3/4"	SERIES	CARRIER MODEL 45K, SIZE 4
D1	1750	12"	560	1400	1050	1400	0.45	1/2	208/3/60	28950	64°	180°	2.90	5	0.15	3/4"	SERIES	CARRIER MODEL 45K, SIZE 5
E1	2500	14"	800	2000	1450	2000	0.45	3/4		41350	64°	180°	4.14	5	0.15	1"	SERIES	CARRIER MODEL 45K, SIZE 6
F1	2875	16"	920	2300	1450	2300	0.45	1		45475	64°	180°	4.57	5	0.15	1"	SERIES	CARRIER MODEL 45K, SIZE 7

NOTES:
1. TERMINALS MUST MEET THE SOUND POWER REQUIREMENTS LISTED IN THE BASE BUILDING SPECIFICATION.
2. PROVIDE EACH TERMINAL WITH REMOTE NON-FUSED DISCONNECT SWITCH MOUNTED TO BUILDING STRUCTURE.
3. CONTRACTORS TO FURNISH 12" LONG RIGID ROUND INLET DUCT OF THE SAME DIAMETER AS PRIMARY VALVE CONNECTED TO VAV UNIT COMPLETE WITH INCREASER TO ACCOMODATE INLET DUCT SIZE AS SCHEDULED.
4. INLET SIZE SCHEDULED IS MINIMUM DIAMETER DUCT RUNOUT.

GRILLE AND REGISTER SCHEDULE

MARK	MAX. CFM	REGISTER SIZE	PANEL SIZE (IN.)	MAX. NC	TYPE	BASIS OF DESIGN
⧄	500	- - -	24" x 24"	25	2-3/4"SLOT	TITUS MODEL MBR-30, 2-3/4"SLOT, LIGHT SHEILD. SEE NOTE 1, 2, 3
CR	AS INDICATED	AS INDICATED	AS INDICATED	30	REGISTER	TITUS MODEL 300/350, 0° DEFLECTION, TYPE 1 BORDER
HSWR	AS INDICATED	AS INDICATED	AS INDICATED	30	REGISTER	TITUS MODEL 300/350, 22.5° DEFLECTION, TYPE 1 BORDER.
LSWR	AS INDICATED	AS INDICATED	AS INDICATED	30	REGISTER	TITUS MODEL 300/350, 22.5° DEFLECTION, TYPE 1 BORDER.

1. GRILLES AND REGISTERS SHALL BE PROVIDED WITHOUT VOLUME DAMPER. PROVIDE DAMPER AT SPIN-IN FITTINGS OR AS FAR AWAY AS POSSIBLE FROM GRILLE.
2. RETURN DIFFUSER SHALL BE PROVIDED WITHOUT PATTERN CONTROLLER.
3. CONTRACTOR SHALL PROVIDE DIFFUSER FACE WITH CEILING TILE MATCHING THE SORROUNDING CEILING.

CR - CEILING REGISTER
HSWR - HIGH SIDE WALL REGISTER. TOP OF REGISTER SHALL BE 6" BELOW CEILING WHERE THERE IS NO CEILING, INSTALL AS HIGH AS POSSIBLE, OR DUCT MOUNTED.
LSWR - LOW SIDE WALL REGISTER. BOTTOM OF REGISTER SAHLL BE 6" A F F.

DIFFUSER SCHEDULE

MARK	MAX CFM	NECK OR COLLAR	DIFFUSER SIZE (IN.)	MAX. PRES. DROP (IN. WG)	MAX. NC	TYPE	FLOW PATTERN	BASIS OF DESIGN
A	240	8"ø	24 x 24	0.09	25	2-3/4" SLOT PLAQUE FACE	4-WAY (ADJ.) 4-WAY	TITUS MODEL MBI-30 (SEE NOTE 1, 2, 5) TITUS DAT NT MODEL (SEE NOTE 1)
B	275	10"ø	24 x 24	0.10	25	2-3/4" SLOT PLAQUE FACE	4-WAY (ADJ.) 4-WAY	TITUS MODEL MBI-30 (SEE NOTE 1, 2, 5) TITUS DAT NT MODEL (SEE NOTE 1)
C	65/FT	- -	2-1"SLOT	0.09	25	LINEAR SLOT	ADJUSTABLE	TITUS MODEL ML-39, (SEE NOTE 3)
D	65/FT	- -	2-1"SLOT	0.09	25	LINEAR SLOT	ADJUSTABLE	TITUS MODEL ML-39, (SEE NOTE 4)

NOTE:
1. DIFFUSER SHALL BE PROVIDED WITHOUT VOLUME DAMPER. DAMPER SHALL BE PROVIDED AT SPIN-IN FITTINGS.
2. CONTRACTOR SHALL PROVIDE DIFFUSER FACE WITH CEILING TILE MATCHING THE SORROUNDING CEILING.
3. 4"-0", 2@1" SLOT DIFFUSER WITH 4' LONG MPI-39 SUPPLY PLENUM BOX
4. 2"-0", 2@1" SLOT DIFFUSER WITH 2' LONG MPI-39 SUPPLY PLENUM BOX
5. DIFFUSER MODEL SHALL BE USE IN COURT ROOMS AND ROOMS WITH 10'-0" OR HIGHER CEILING ONLY.

Interior Improvements to DC Superior Courts Building 'B'
409 E Street, NW
Washington, DC 20001

U.S. General Services Administration
301 7th Street, SW, Room 2021
Washington, DC 20407

LEO A DALY
1201 Connecticut Ave, NW
Washington DC 20036 USA
Tel 202-861-4600 Fax 202-872-8530

Dalco
10005 Old Columbia Road Suite L261
Columbia, MD 21046
Tel: 410-290-8827
Fax: 410-290-8812

Contractor
Address

KEY PLAN

ISSUES / REVISIONS

NO.	DESCRIPTION	DATE

FILE LOG

ACTIVITY	REFERENCE	BY
Manager		
Design		CSD
Draw		
Draw		
Draw		EA
Check		CSD

REGISTRATION

JOB No 52010300

CONSTRUCTION PACKAGE

ISSUED FOR CONSTRUCTION (FINAL) APRIL 8, 2003

MECHANICAL SCHEDULES

M4.01

© Leo A Daly Company 2003

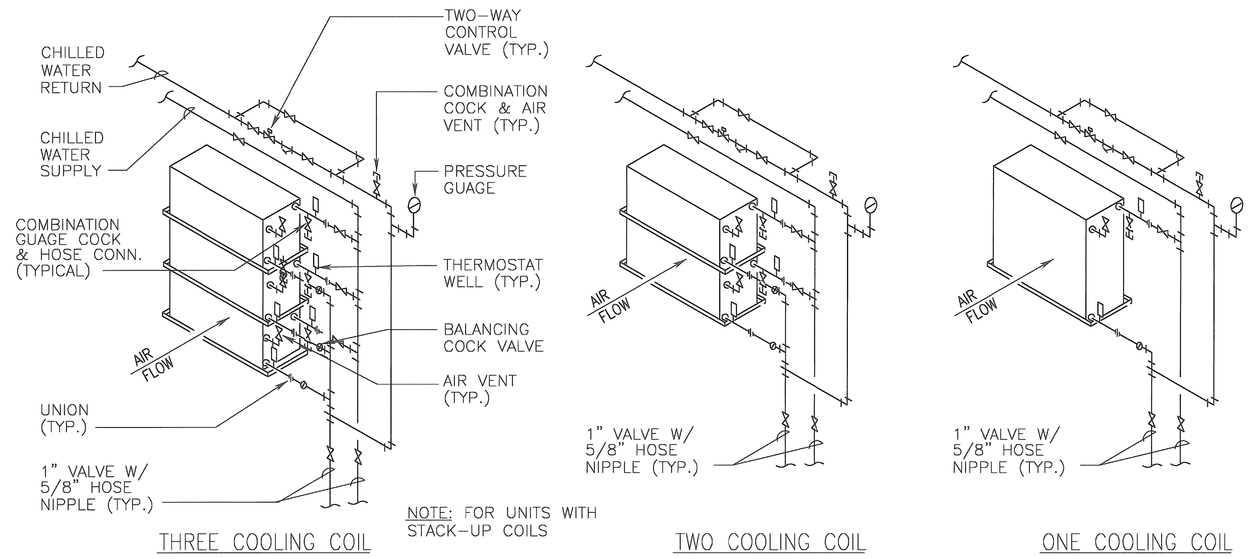

1 / M5.01 COOLING COIL DETAIL
SCALE: NOT TO SCALE

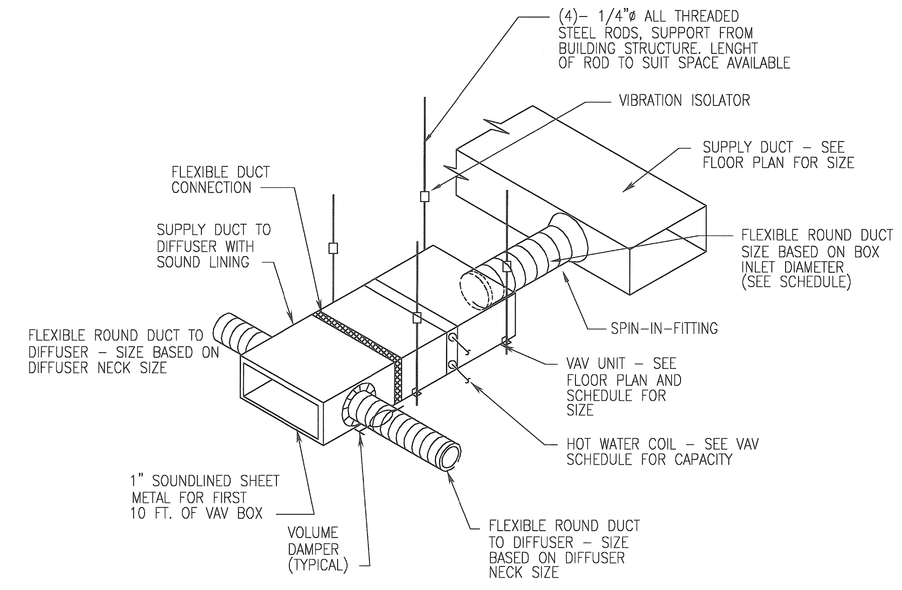

2 / M5.01 AIR TERMINAL VAV UNIT MOUNTING DETAIL
NO SCALE

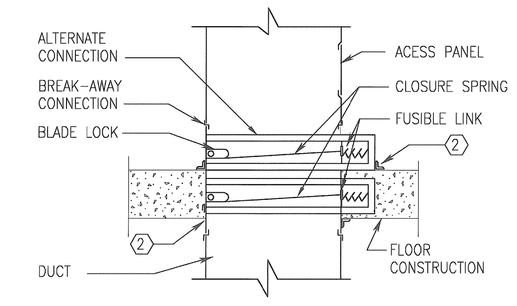

1. RETAINING ANGLES - ENTIRE PERIMETER BOTH SIDES - SECURE TO SLEEVE ONLY.
2. MIN. 10 GA. SLEEVE W/ 1/8" PER FT. CLEARANCE FOR EXPANSION.
3. SIZE OF RETAINING ANGLES, FASTENER SIZE & SPACING, TYPE OF BREAK-AWAY CONNECTION AND INSTALLATION DETAILS SHALL BE IN ACCORDANCE W/ MANUFACTURER'S RECOMMENDATIONS AND SMACNA DETAILS FOR FIRE DAMPERS.
4. ENCASE FIRE DAMPER W/ FIRE-RESISTIVE MATERIALS IN ACCORDANCE W/ SCHEDULE 1 - SMACNA FD GUIDE IF DUCTWORK IS NOT INSULATED.

3 / M5.01 FIRE DAMPER DETAIL
NO SCALE

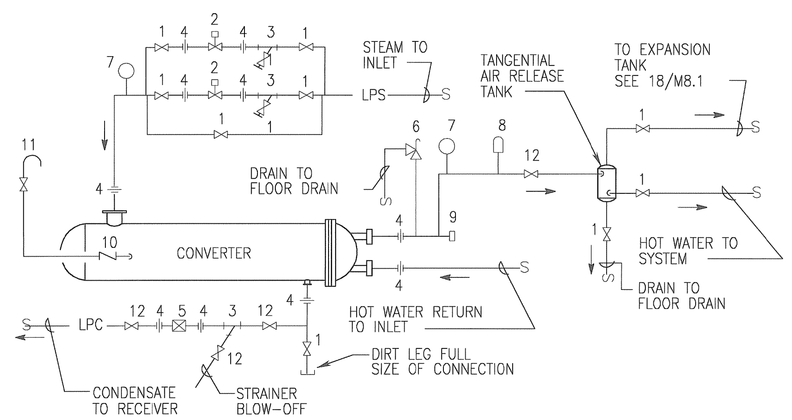

1. BUTTERFLY VALVE
2. AUTOMATIC CONTROL VALVE
3. STRAINER
4. UNION
5. F & T TRAP
6. SAFETY RELIEF VALVE
7. PRESSURE GAGE
8. TERMOMETER & WELL
9. TEMPERATURE SENDING DIVICE
10. 1/2 " OPEN END CHECK VALVE
11. 1/2 " VACUUM BREAKER
12. BALL VALVE

4 / M5.01 STEAM/ WATER CONVERTER DETAIL
NO SCALE

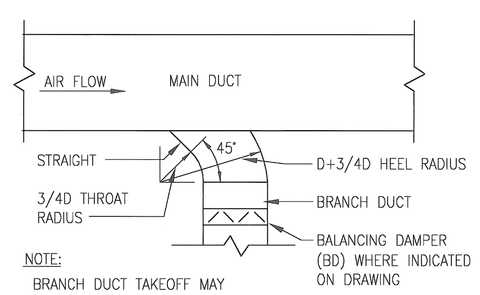

NOTE:
BRANCH DUCT TAKEOFF MAY BE USED ANYWHERE.

5 / M5.01 TYPICAL BRANCH CONNECTION
NO SCALE

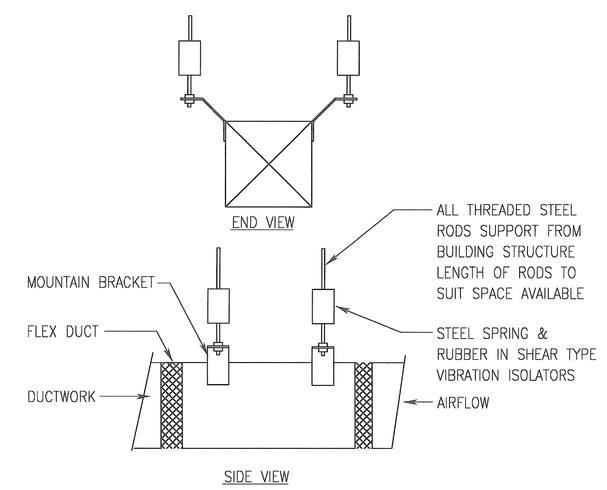

6 / M5.01 IN-LINE FAN DETAIL
NO SCALE

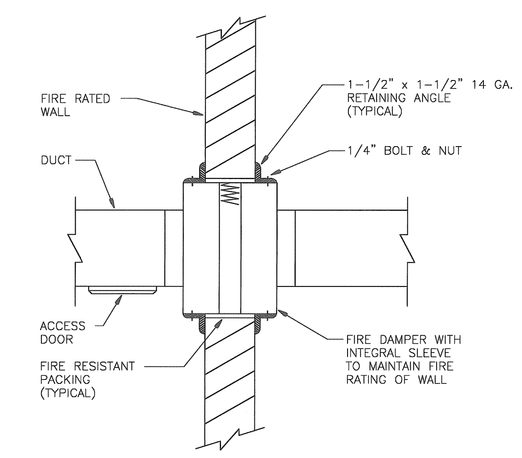

NOTE:
INSTALL FIRE DAMPERS IN ALL RATED WALLS PER NFPA AND LOCAL CODE REQUIREMENTS TO MAINTAIN THE RATING OF THAT ASSEMBLY. REFER TO ARCH. DRAWINGS FOR EXACT RATINGS, LOCATIONS, AND QUANTITIES OF FIRE DAMPERS.

7 / M5.01 VERTICAL FIRE DAMPER DETAIL
NO SCALE

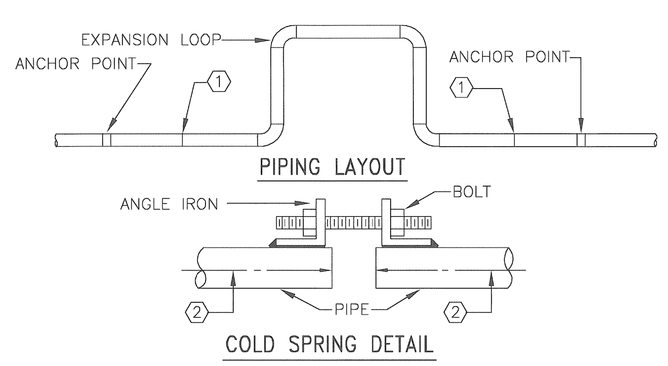

COLD SPRING NOTES:

TOTAL COLD SPRING DIMENSION SHALL BE 1/2 OF TOTAL EXPANSION

INSTALL ALL PIPE LEAVING SPACE AT COLD SPRING LOCATION

TACK ANGLES WITH HOLES TO EACH END OF PIPE. OUT BOLT IN PLACE AND DRAW PIPE ENDS TOGETHER

1 TACK WELD PIPE JOINT

2 KNOCK OFF ANGLES AND COMPLETE WELD

8 / M5.01 EXPANSION LOOP DETAIL

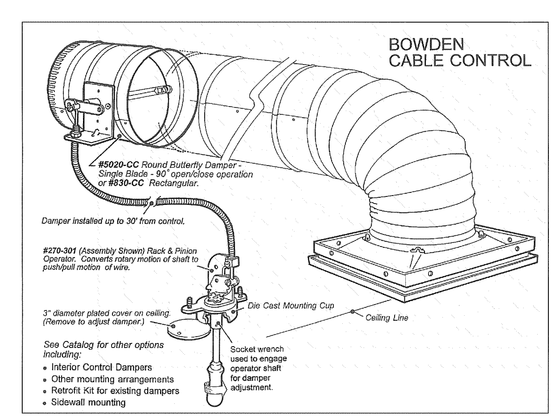

9 / M5.01 SPECIAL VOLUME DAMPER DETAIL
NO SCALE (WHERE APLICABLE)

SPECIAL VOLUME DAMPER NOTE:

ALL VOLUME DAMPERS ABOVE INACCESSIBLE CEILINGS SHALL BE PROVIDED WITH BOWDEN REMOTE CABLE CONTROLS (REGULATORS #2/0-301 AND/OR #2/0-302)AS MANUFACTURED BY YOUNG REGULATOR COMPANY OR APPROVED EQUAL. DAMPERS MOUNTED ON DIFFUSER INLETS OR USE OF CEILING ACCESS PANELS FOR ADJUSTMENT ARE NOT ACCEPTABLE.

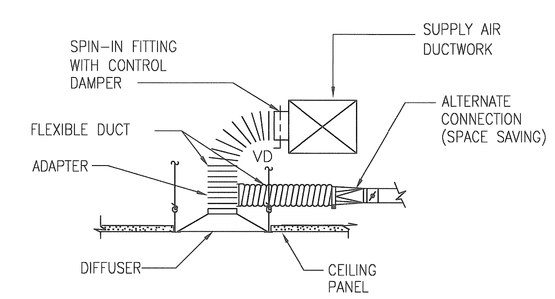

10 / M5.01 TYPICAL DIFFUSER MOUNTING DETAIL
NO SCALE

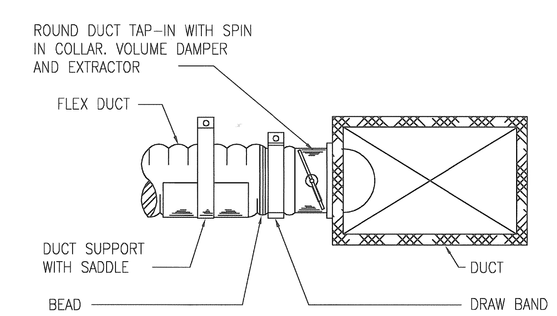

NOTES:
1. FLEXIBLE DUCT SUPPORT SHALL HAVE A MAX. 3'-0" SPACING.
2. FLEXIBLE DUCT SHALL BE U.L. LISTED.
3. SEE SMACNA DUCT CONSTRUCTION STANDARDS FOR ROUND CONNECTIONS TO RECTANGULAR DUCT.

11 / M5.01 FLEXIBLE DUCT INSTALLATION DETAIL
NO SCALE

Interior Improvements to DC Superior Courts Building 'B'

409 E Street, NW
Washington, DC 20001

U.S. General Services Administration
301 7th Street, SW, Room 2021
Washington, DC 20407

LEO A DALY
1201 Connecticut Ave, NW
Washington DC 20036 USA
Tel 202-861-4600 Fax 202-872-8530

Dalco
10005 Old Columbia Road Suite L261
Columbia, MD 21046
Tel: 410-290-8827
Fax: 410-290-8812

Contractor
Address

KEY PLAN

ISSUES / REVISIONS

NO.	DESCRIPTION	DATE

FILE LOG

ACTIVITY	REFERENCE	BY
Manager		
Design		CND
Draw		
Draw		
Draw		KA
Check		CND

REGISTRATION

JOB No 52010300

CONSTRUCTION PACKAGE

ISSUED FOR CONSTRUCTION (FINAL) APRIL 8, 2003

MECHANICAL DETAILS

M5.01

© Leo A Daly Company 2003

GENERAL NOTES: MECHANICAL

1. ALL MECHANICAL WORK AND EQUIPMENT SHALL MEET THE REQUIREMENTS OF THE MOST RECENTLY REVISED VERSION OF ALL APPLICABLE LAWS, RULES, REGULATIONS AND ORDINANCES OF FEDERAL, INTERNATIONAL MECHANICAL CODE, STATE, LOCAL AND/OR MUNICIPAL CODES WHETHER SHOWN ON THE DRAWING OR NOT.
2. ADHERE TO THE DRAWINGS WHEN REQUIREMENTS ARE STRICTER THAN CODE REQUIREMENTS AND ARE PERMITTED UNDER THE CODE.
3. REPORT ANY ALTERATION TO AND/OR DEVIATIONS FROM THE DRAWINGS AS REQUIRED BY THE INTERNATIONAL MECHANICAL CODE, FEDERAL, STATE, ,LOCAL AND/OR MUNICIPAL CODES TO THE ARCHITECT AND SECURE SECURE HIS/HER APPROVAL BEFORE STARTING ALTERATION.
4. THE CONTRACTOR SHALL REQUEST SUPPLEMENTARY INSTRUCTIONS FROM THE ARCHITECT IN ALL CASES OF DOUBT AS TO THE WORK INTENDED OR IF ADDITIONAL EXPLANATION IS NEEDED.
5. DUCT DIMENSIONS INDICATED ON THE DRAWING ARE CLEAR INSIDE DIMENSIONS. INTERNALLY LINED DUCTWORK SHALL BE INCREASED IN BOTH DIMENSIONS BY TWICE THE THICKNESS OF THE LINER.
6. DUCTWORK SHALL BE FABRICATED AND INSTALLED IN COMPLIANCE WITH THE LATEST EDITION OF THE SMACNA DUCT CONSTRUCTION STANDARDS. PROVIDE ALL NECESSARY DUCTWORK ACCESSORIES TO ALLOW FOR PROPER AIR BALANCE OF THE SYSTEM.
7. FIRE DAMPERS SHALL BE PROVIDED AT ALL DUCT PENETRATIONS THROUGH TWO AND THREE HOUR RATED WALLS, ALL FLOOR PENETRATIONS WHETHER SHOWN ON THE DRAWING OR NOT AND AS INDICATED ON THE DRAWINGS. DUCTWORK LESS THAN 20 SQ IN AREA SHALL HAVE NO FIRE DAMPER.
8. FIRE DAMPER FREE AREA SHALL BE THE SAME AREA AS THE DUCT IT IS INSTALLED IN. PROVIDE ACCESS DOOR FOR FIRE DAMPER SERVICING.
9. PROVIDE AN ADJUSTABLE VOLUME DAMPER FOR EACH DIFFUSER ATTACHED DIRECTLY TO MAIN TRUNK DUCT SPIN-IN-FITTINGS OR AS FAR AWAY AS POSSIBLE FROM DIFFUSER.
10. PROVIDE TURNING VANES AT ALL SQUARE AND RECTANGULAR BRANCH DUCT (ELBOWS) WHETHER SHOWN ON THE DRAWING OR NOT.
11. PROVIDE ACOUSTICAL INSULATION TO THE FOLLOWING:
    A. 1" LINER 25' DOWNSTREAM AND 25' UPSTREAM OF ALL NEW AIR HANDLING UNITS.
    B. 1" LINER UP TO 25 FEET UPSTREAM OF ALL NEW EXHAUST FANS.
    C. PROVIDE 1" ACOUSTICAL LINING TO ALL TRANSFER DUCTS EXCEPT COURTROOMS WHERE 2" LINING SHALL BE PROVIDED.
    D. PROVIDE 1" LINER UP TO 10 FT DOWNSTREAM OF ALL VAV BOXES.
    E. PROVIDE 2" LINER DOWNSTREAM OF ALL VAV BOXES SERVING COURT ROOMS.
    F. PROVIDE 2" LINER ON RA DUCTWORK UP TO 5 FEET F ROM OPENINGS.
12. ALL DUCTWORK WITH ACOUSTICAL LINING NEED NOT BE INSULATED EXCEPT ALL SUPPLY AND RETURN AIR DUCTWORK LOCATED IN THE ATTIC.
13. NOT USED.
14. INSULATED FLEXIBLE DUCT SHALL BE PROVIDED TO CONNECT BETWEEN RIGID DUCTWORK AND VARIOUS AIR OUTLETS, ETC., AS SHOWN ON THE DRAWING. MINIMUM LENGTH SHALL BE 2'-0" AND MAXIMUM LENGTH SHALL BE 8'-0" AND SHALL REQUIRE NO MORE THAN TWO ELBOWS WHEN INSTALLED. IN THE EVENT OF CONNECTIONS NEEDING MORE THAN 8 FEET IN LENGTH, SPIN-IN-FITTING (HARD DUCT) SHALL BE EXTENDED TO ATTAIN THE MIN./MAX. PARAMETERS FOR FLEXIBLE DUCT CONNECTIONS.
15. REFER TO ARCHITECTURAL REFLECTED CEILING PLAN FOR EXACT LOCATION OF ALL CEILING MOUNTED AIR DISTRIBUTION EQUIPMENT.
16. INSTALL FLANGES OR UNIONS AT PIPING CONNECTIONS TO ALL MECHANICAL EQUIPMENT SUCH THAT UNIT CAN BE REMOVED WITHOUT DISMANTLING ALL PIPING.
17. COORDINATE ROUTING & ELEVATION OF ALL DUCTWORK AND PIPING WITH ALL ALL TRADES BEFORE CONSTRUCTION BEGINS.
18. ALL PIPE PENETRATIONS THROUGH WALLS AND FLOORS SHALL BE PROVIDED WITH SLEEVES AND ESCUTCHEON PLATES.
19. PIPES SHALL BE CENTERED TO ALLOW FOR EXPANSION AND CONTRACTION, ALSO PROVIDE CAULKING, WATERPROOFING AND FIREPROOFING WHERE REQUIRED.
20. ALL PIPES EXPOSED TO THE OUTDOOR WEATHER CONDITION SHALL BE INSULATED AND HEAT TRACED, REFER TO SPECIFICATIONS AND DETAILS FOR MATERIALS TO BE USED.
21. ALL TEMPERATURE SENSORS AND SIMILAR DEVICES SHALL BE MOUNTED 54" ABOVE FINISH FLOOR UNLESS NOTED OTHERWISE.
22. ALL HOUSEKEEPING (CONC.) PADS SHALL BE 4 INCHES THICK MINIMUM.

GENERAL NOTES: PLUMBING

1. ALL PLUMBING WORK AND EQUIPMENT SHALL MEET THE REQUIREMENTS OF THE MOST RECENTLY REVISED VERSION OF ALL APPLICABLE LAWS, RULES, REGULATIONS AND ORDINANCES OF FEDERAL, INTERNATIONAL PLUMBING CODE, STATE, LOCAL AND/OR MUNICIPAL CODES WHETHER SHOWN ON THE DRAWING OR NOT.
2. ALL PIPING SHALL BE ROUTED WITH SLOPE AS FOLLOWS:
   SANITARY – 1/8 INCH PER FOOT (MIN.)
   STORM – 1/8 INCH PER FOOT (MIN.)
3. COORDINATE ROUTING OF ALL PIPING WITH OTHER TRADES PRIOR TO START OF CONSTRUCTION.
4. PROVIDE AS-BUILT DRAWINGS OF ALL UNDERGROUND PIPING INSTALLED WITH DIMENSIONS FROM CENTERLINE OF COLUMN TO CENTER OF PIPES WITH INVERT ELEVATIONS.
5. ALL PIPING SHALL BE PROVIDED WITH SECTIONAL SHUT-OFF VALVES, AS SHOWN ON PLROJECT PLANS AND ACCESS PANELS FOR ALL HIDDEN VALVES. PROVIDE ISOLATION VALVES FOR ALL PLUMBING FIXTURES.
6. WALL HYDRANTS SHALL BE NON-FREEZE TYPE AND SHALL BE EQUIPPED WITH AN APPROVED VACUUM BREAKER.
7. ALL CONDENSATE DRAIN PIPING SHALL BE SLOPED 1/4" PER FOOT AND SHALL HAVE A 2" AIR GAP WHERE PIPE TERMINATES AT FLOOR/AREA DRAIN.
8. PLUMBING CONTRACTOR SHALL BACK VENT FIXTURES AT FLOOR ABOVE WHERE STACK BEGINS OFFSET.
9. PROVIDE PIPE INSULATION TO ALL DOMESTIC HOT AND COLD WATER PIPES AND STORM PIPING (WHEN HORIZONTAL) ABOVE CEILING SPACE, REFER TO SPECIFICATIONS FOR TYPES OF INSULATION TO BE USED.
10. ENTIRE BUILDING SHALL BE SPRINKLERED IN STRICT COMPLIANCE WITH NFPA 13 AND THE RULES AND REGULATIONS OF THE DISTRICT OF COLUMBIA. SEE FIRE PROTECTION RISER ON SHEET P3.03.
11. PIPES EXPOSED TO THE WEATHER SHALL BE INSULATED AND HEAT TRACED. REFER TO SPECIFICATIONS FOR MATERIALS TO BE USED.
12. ALL PIPE PENETRATIONS THROUGH WALLS SHALL BE PROVIDED WITH SLEEVES AND ESCUTCHEON PLATES.
13. PIPES SHALL BE CENTERED TO ALLOW FOR EXPANSION AND CONTRACTION, ALSO PROVIDE CAULKING, WATERPROOFING AND FIREPROOFING WHERE REQUIRED.

MECHANICAL AND PLUMBING SYMBOLS

SYMBOL	DESCRIPTION	SYMBOL	DESCRIPTION	SYMBOL	DESCRIPTION
CA	COMPRESSED AIR		PIPE ANCHOR	AD / AD	AUTOMATIC DAMPER
COS	CONDENSER WATER SUPPLY		PIPE DOWN		
COR	CONDENSER WATER RETURN		PIPE GUIDE	M / M	MOTORIZED DAMPER
CWS	CHILLED WATER SUPPLY		PIPE UP		
CWR	CHILLED WATER RETURN		PIPE WITH HEAT TRACING	BD / BD	BACKDRAFT DAMPER–BD
	DOMESTIC COLD WATER		PRESSURE GAUGE		
	DOMESTIC HOT WATER	RD	ROOF DRAIN		DUCTWORK (PROVIDED BY LANDLORD)
DRW	DRINKING WATER	SA"A"	SHOCK ABSORBER		
DW	DRINKING WATER PIPE		SIGHT GLASS (FLOW TYPE)	FD / FD	FIRE DAMPER–FD
ED	EXPRESS DRAIN	SP	STATIC PRESSURE SENSOR		
F	FIRE LINE		STRAINER		FAN POWERED VAV BOX WITH ELECTRIC HEAT
FW	FILTERED WATER		THERMOMETER		
G	NATURAL GAS	T	THERMOSTAT		REGULAR VAV BOX WITHOUT ELECTRIC HEAT
HWS	HOT WATER SUPPLY		TRAP PRIMER		
HWR	HOT WATER RETURN		UNION	VD	SMOKE DAMPER
		WCO	WALL CLEANOUT		
S	SANITARY SEWER			S	SMOKE DETECTOR / SENSOR
D	CONDENSATE DRAIN PIPE	LAV	LAVATORY		
SD	SUBSOIL DRAIN	MS	MOP SINK		VOLUME DAMPER–VD MANUAL DAMPER–MD
ST	STORM SEWER	SS	SERVICE SINK		
V	SANITARY VENT	SH	SHOWER HEAD		FLEXIBLE CONNECTION
	BALANCING VALVE	UR	URINAL		
	BALL VALVE	1	COLUMN NUMBER OR LETTER		FLEXIBLE DUCT
	BUTTERFLY VALVE	SH	SHOWER		
	CHECK VALVE				OUTSIDE AIR DUCT (DN)
	COCK (GAGE, AIRVENT, DRAIN)	WC	WATER CLOSET (FLUSH VALVE)		
	DRY VALVE	WC	WATER CLOSET (TANK TYPE)		OUTSIDE AIR DUCT (UP)
	DCVBPA–DOUBLE CHECK VALVE BACKFLOW PREVENTION ASSEMBLY RZBP–REDUCED ZONE BACKFLOW PREVENTER DCDA–DOUBLE CHECK DETECTOR ASSEMBLY	W / L	DOMESTIC WATER RISER		
		S / L	SANITARY RISER	12x12 / 12x12	RECTANGULAR DUCT (FIRST NUMBER IS SIDE SHOWN IN INCHES)
	ECCENTRIC PLUG VALVE	L	DOOR LOUVER		
	GAS COCK	U	DOOR UNDERCUT		RETURN/EXHAUST DUCT (DN)
	GATE VALVE		POINT OF CONNECTION (NEW TO EXISTING)		
	GLOBE VALVE	FP / L	FIRE PROTECTION RISER		RETURN OR EXHAUST DUCT (UP)
	MIXING VALVE	G / L	NATURAL GAS RISER		
	OS&Y VALVE	ST / L	STORM RISER	12"Ø / 12"Ø	ROUND DUCT
	PRE–ACTION VALVE	100	ROOM NUMBER		
	PRESSURE REGULATING VALVE	DW / L	DOMESTIC WATER RISER		SUPPLY AIR DUCT (DN)
	SAFETY RELIEF VALVE	V / L	VENT RISER		
	TEMP. & PRESS. RELIEF VALVE	R S	REFRIGERANT MONITOR		SUPPLY AIR DUCT (UP)
	TEST PLUG	A	(REFRIGERANT) AUDIBLE AND VISUAL SIGNALING DEVICE		
	VALVE IN RISER	P	PURGE SWITCH		RECTANGULAR REGISTER OR DIFFUSER–SUPPLY
	WET VALVE	AP	PRESSURE DIFFERENTIAL SENSOR		
	CAP	SA / L	SUPPLY AIR RISER	L.C.	TURNING VANES
CO	CLEANOUT	RA / L	RETURN AIR RISER		
	FIRE DEPARTMENT CONNECTION	OA / L	OUTSIDE AIR RISER		RECTANGULAR REGISTER RETURN OR EXHAUST
	FLANGE	EA / L	EXHAUST AIR RISER		
WH	WALL HYDRANT	RELIEF / L	RELIEF AIR RISER		ROUND FACE SUPPLY DIFFUSER
	BUTTERFLY VALVE	SSP	SPACE STATIC PRESSURE SENSOR		
FCO	FLOOR CLEANOUT	CWS / L	CHILLED WATER SUPPLY RISER		SQUARE FACE SUPPLY DIFFUSER
FD/AD	FLOOR DRAIN – FD AREA DRAIN – AD	CWR / L	CHILLED WATER RETURN RISER		
	PRESSURE REDUCING VALVE	HWS / L	HOT WATER SUPPLY RISER	GLYS	GLYCOL SUPPLY
CO	GRADE CLEANOUT	HWR / L	HOT WATER RETURN RISER	GLYR	GLYCOL RETURN
HB	HOSE BIBB	DRW / L	DRINKING WATER RISER		
H	HUMIDISTAT	T	T'STAT SENSOR,(DDC) DUCT OR CEILING MTD	C / RO	DIFFUSER TYPE CFM

ABBREVIATIONS

A		FIN.	FINISH	O.C.	ON CENTER
AD	AREA DRAIN/AUTOMATIC DAMPER	FT.	FEET	OED	OPEN–END DUCTWORK
ADJ.	ADJUSTABLE	FPM	FEET PER MINUTE	OFD	OVERFLOW DRAIN
AFD	ADJUSTABLE FREQUENCY DRIVE	FS	FLOOR SINK	OPNG.	OPENING
AFF	ABOVE FINISHED FLOOR	FW	FILTERED WATER		
AP	ACCESS PANEL			P	
ARCH.	ARCHITECTURAL	G		PNL.	PANEL
AUTO.	AUTOMATIC	GCF	GARAGE CIRCULATING FAN	PPM	PARTS PER MILLION
		GD	GUTTER DRAIN/GARAGE DRAIN	PRV	PRESSURE REGULATING VALVE
B		GLYS	GLYCOL SUPPLY	PSI	POUNDS PER SQUARE INCH
BD	BACKDRAFT DAMPER	GLYR	GLYCOL RETURN		
BTUH	BRITISH THERMAL UNIT/HOUR	GPM	GALLONS PER MINUTE	R	
BWV	BACKWATER VALVE	GRD	GROUND	RA	RETURN AIR
		GWH	GAS WATER HEATER	RD	ROOF DRAIN
C				REG.	REGISTER
CD	CEILING DIFFUSER	H		RF	RETURN/RELIEF AIR FAN
CFF	CAPPED FOR FUTURE	H_2O	WATER	RL	RAIN LEADER
CFM	CUBIC FOOT PER MINUTE	HB	HOSE BIBB	R/O	REVERSE OSMOSIS
CFH	CUBIC FEET PER HOUR	HP	HORSEPOWER/HEAT PUMP	RM.	ROOM
C.I.	CAST IRON	HSWG	HIGH SIDE WALL GRILLE	RTU	ROOF TOP UNIT
CLG.	CEILING	HSWR	HIGH SIDE WALL REGISTER		
CO	COMPANY/CLEAN OUT	HW	HOT WATER	S	
COMP.	COMPRESSOR	HWBH	HOT WATER BASEBOARD HEATER	SA	SUPPLY AIR/SHOCK ABSORBER
CONC.	CONCRETE	HWCH	HOT WATER CONVECTOR HEATER	SAF	SUPPLY AIR FAN
COND. DR.	CONDENSATE DRAIN	HWP	HOT WATER PUMP	SAN./S	SANITARY
CONN.	CONNECTION	HWS	HOT WATER SUPPLY	SD	SHOWER DRAIN
CONT.	CONTINUATION/CONTINUE	HWR	HOT WATER RETURN	SEF	SMOKE EXHAUST FAN
COP	CONDENSER WATER PUMP			SF	SQUARE FEET/SUPPLY FAN
COR	CONDENSER WATER RETURN	I		SHT.	SHEET
COS	CONDENSER WATER SUPPLY	I.E.	INVERT ELEVATION	S/M	SHEET METAL
CR	CEILING REGISTER	INV. ELEV.	INVERT ELEVATION	S.P.	STATIC PRESSURE
CUH	CABINET UNIT HEATER			SPD.	SPEED
CW	COLD WATER	J		SQ.	SQUARE
CWP	CHILLED WATER PUMP	JAN.	JANITORIAL	ST	STORM
CWS	CHILLED WATER SUPPLY			STL.	STEEL
CWR	CHILLED WATER RETURN	K			
		KW	KILOWATT	T	
D				TD	TRANSFER DUCT/TRENCH DRAIN
DB	DRY BULB	L		TG	TRANSFER GRILLE
DEPT.	DEPARTMENT	LAT	LEAVING AIR TEMPERATURE	TRANS.	TRANSFER
DN.	DOWN	LSWG	LOW SIDE WALL GRILLE	TYP.	TYPICAL
DTL.	DETAIL	LSWR	LOW SIDE WALL REGISTER		
DW	DOMESTIC WATER	LVL	LEVEL	U	
DWG.	DRAWING	LWT	LEAVING WATER TEMPERATURE	UH	UNIT HEATER
DWH	DOMESTIC WATER HEATER				
		M		V	
E		MAX.	MAXIMUM	VAV	VARIABLE AIR VOLUME
E/EX/EXIST.	EXISTING	MBH	THOUSAND BTUH	VFD	VARIABLE FREQUENCY DRIVE
EAT	ENTERING AIR TEMPERATURE	MECH.	MECHANICAL	V/PH/HZ	VOLTS/PHASE/HERTZ
ED	EXPRESS DRAIN	MFR.	MANUFACTURER	VTR	VENT THRU ROOF
EF	EXHAUST FAN	MH	MANHOLE		
EL./ELEV.	ELEVATION	MIN.	MINIMUM	W	
ENT	ENTERING	MNL	MANUAL	W/	WITH
ESP	EXTERNAL STATIC PRESSURE	MTR	MOTOR	WB	WET BULB
EWT	ENTERING WATER TEMPERATURE			WC	WATER COLUMN
EXH.	EXHAUST	N		WCO	WALL CLEANOUT
EXP.	EXPANSION	NC	NOISE CRITERIA	WG	WATER GAUGE
		NEG.	NEGATIVE	WH	WALL HYDRANT
F		NO.	NUMBER	WMS	WIRE MESH SCREEN
°F	DEGREE FAHRENHEIT	N.O.	NORMALLY OPEN	WS	WET STACK
FCO	FLOOR CLEANOUT	N.C.	NORMALLY CLOSE		
FD	FIRE DAMPER/FLOOR DRAIN				
FH	FIRE HYDRANT	O			
		OA	OUTSIDE AIR		

Interior Improvements to DC Superior Courts Building 'B'

409 E Street, NW
Washington, DC 20001

GSA U.S. General Services Administration
301 7th Street, SW, Room 2021
Washington, DC 20407

LEO A DALY PLANNING ARCHITECTURE ENGINEERING INTERIORS
CBT. 1915
1201 Connecticut Ave, NW
Washington DC 20036 USA
Tel 202-861-4600 Fax 202-872-8530

Dalco Incorporated
10005 Old Columbia Road Suite L261
Columbia, MD 21046
Tel: 410-290-8827
Fax: 410-290-8812

Contractor
Address

KEY PLAN

ISSUES / REVISIONS

NO.	DESCRIPTION	DATE

FILE LOG

ACTIVITY	REFERENCE	BY
Manager		
Design		GSD
Draw		
Draw		
Draw		CA
Check		GSD

REGISTRATION

JOB No 52010300

CONSTRUCTION PACKAGE

ISSUED FOR CONSTRUCTION (FINAL) APRIL 8, 2003

SYMBOLS, NOTES AND ABBREVIATIONS

MP.00

© Leo A Daly Company 2005

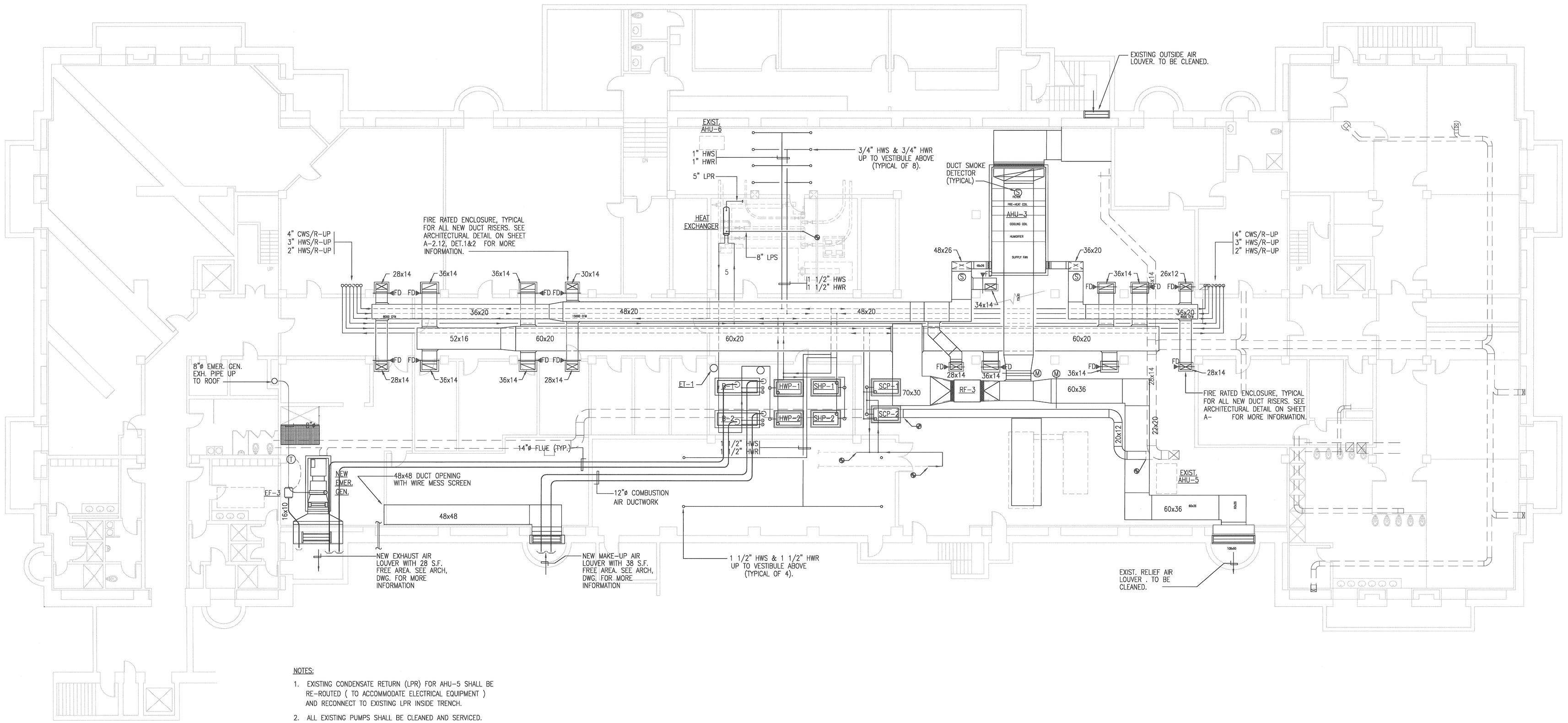

NOTES:

1. EXISTING CONDENSATE RETURN (LPR) FOR AHU-5 SHALL BE RE-ROUTED (TO ACCOMMODATE ELECTRICAL EQUIPMENT) AND RECONNECT TO EXISTING LPR INSIDE TRENCH.
2. ALL EXISTING PUMPS SHALL BE CLEANED AND SERVICED. ALL LEAKING PIPES SHALL BE FIXED OR REPLACED AS REQUIRED.

Interior Improvements to DC Superior Courts Building 'B'

409 E Street, NW
Washington, DC 20001

U.S. General Services Administration
301 7th Street, SW, Room 2021
Washington, DC 20407

LEO A DALY
PLANNING ARCHITECTURE ENGINEERING INTERIORS
EST. 1915

1201 Connecticut Ave, NW
Washington DC 20036 USA
Tel 202-861-4600 Fax 202-872-8530

Dalco INCORPORATED
10005 Old Columbia Road Suite L261
Columbia, MD 21046
Tel: 410-290-8827
Fax: 410-290-8812

Contractor
Address

KEY PLAN

ISSUES / REVISIONS

NO.	DESCRIPTION	DATE

FILE LOG

ACTIVITY	REFERENCE	BY
Manager		JL
Design		GSD
Draw		
Draw		
Draw		GSD
Check		JCA

REGISTRATION

JOB No 52010300

CONSTRUCTION PACKAGE

ISSUED FOR CONSTRUCTION (FINAL) APRIL 8, 2003

MECHANICAL BASEMENT PLAN

M1.00

© Leo A Daly Company 2003

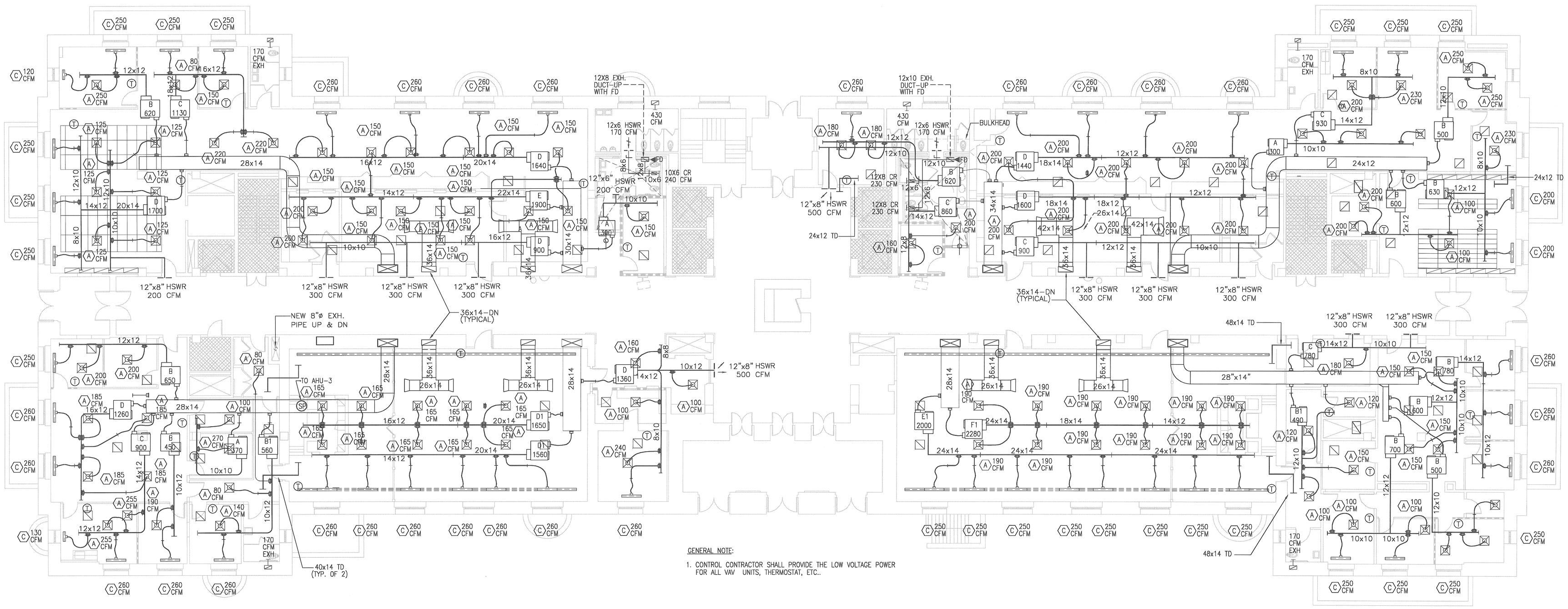

GENERAL NOTE:

1. CONTROL CONTRACTOR SHALL PROVIDE THE LOW VOLTAGE POWER FOR ALL VAV UNITS, THERMOSTAT, ETC..

Interior Improvements to DC Superior Courts Building 'B'

409 E Street, NW
Washington, DC 20001

U.S. General Services Administration
301 7th Street, SW, Room 2021
Washington, DC 20407

LEO A DALY
PLANNING ARCHITECTURE ENGINEERING INTERIORS
EST. 1915

1201 Connecticut Ave, NW
Washington DC 20036 USA
Tel 202-861-4600 Fax 202-872-8530

Dalco
10005 Old Columbia Road Suite L261
Columbia, MD 21046
Tel: 410-290-8827
Fax: 410-290-8812

Contractor
Address

KEY PLAN

ISSUES / REVISIONS

NO.	DESCRIPTION	DATE

FILE LOG

ACTIVITY	REFERENCE	BY
Manager		
Design		CSD
Draw		
Draw		
Draw		KA
Check		CSD

REGISTRATION

JOB No 52010300

CONSTRUCTION PACKAGE

ISSUED FOR CONSTRUCTION (FINAL) APRIL 8, 2003

MECHANICAL
FIRST FLOOR PLAN

M1.01

© Leo A Daly Company 2003

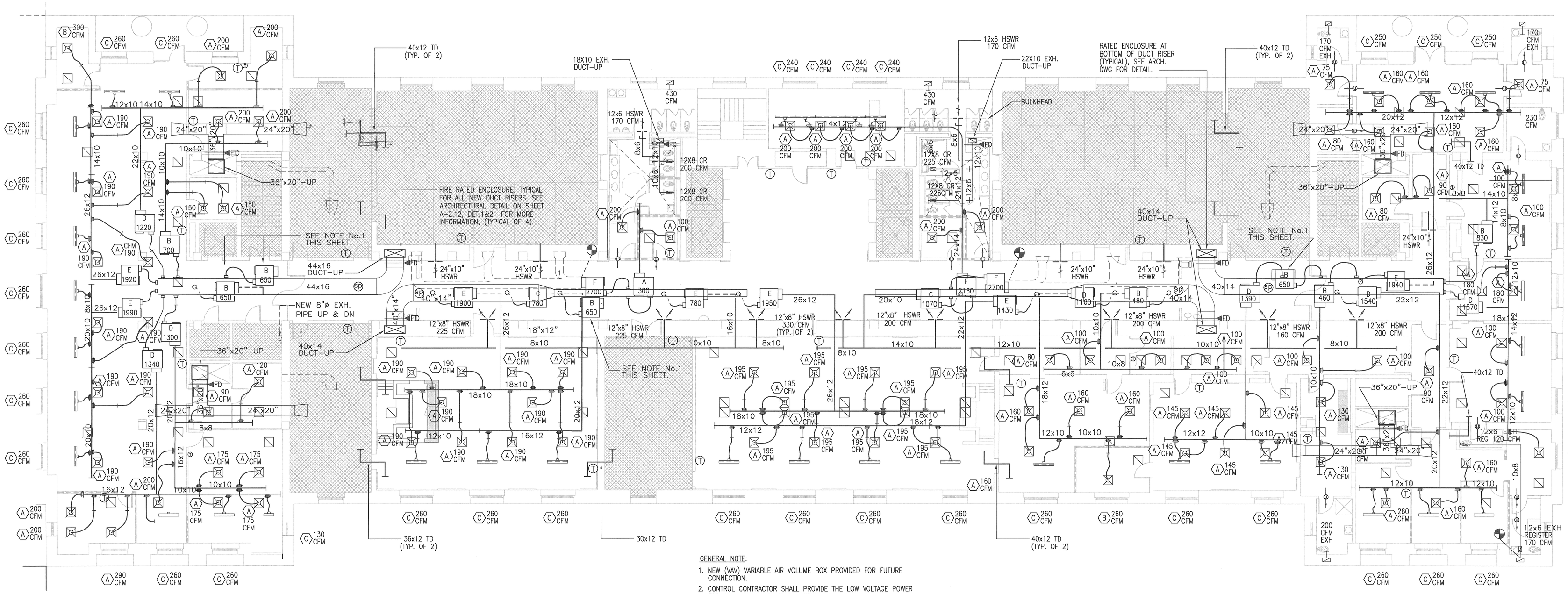

GENERAL NOTE:

1. NEW (VAV) VARIABLE AIR VOLUME BOX PROVIDED FOR FUTURE CONNECTION.
2. CONTROL CONTRACTOR SHALL PROVIDE THE LOW VOLTAGE POWER FOR ALL VAV UNITS, THERMOSTAT, ETC..
3. ALL PERIMETER LINEAR DIFFUSERS ARE SIDE WALL MOUNTED AND SHALL BE ADJUSTED TO DIRECT SUPPLY AIR 15° (UPPER SLOT) AND 30° (LOWER SLOT) TOWARDS THE WINDOW. SEE ARCHITECTURAL DRAWING A5.31 DETAIL 2 FOR MORE INFORMATION.

Interior Improvements to DC Superior Courts Building 'B'

409 E Street, NW
Washington, DC 20001

U.S. General Services Administration
301 7th Street, SW, Room 2021
Washington, DC 20407

LEO A DALY
PLANNING ARCHITECTURE ENGINEERING INTERIORS
EST. 1915

1201 Connecticut Ave, NW
Washington DC 20036 USA
Tel 202-861-4600 Fax 202-872-8530

Dalco INCORPORATED
10005 Old Columbia Road Suite L261
Columbia, MD 21046
Tel: 410-290-8827
Fax: 410-290-8812

Contractor
Address

KEY PLAN

ISSUES / REVISIONS

NO.	DESCRIPTION	DATE

FILE LOG

ACTIVITY	REFERENCE	BY
Manager		
Design		CSD
Draw		
Draw		
Draw		KA
Check		CSD

REGISTRATION

JOB No 52010300

CONSTRUCTION PACKAGE

ISSUED FOR CONSTRUCTION (FINAL) APRIL 8, 2003

MECHANICAL
SECOND FLOOR PLAN

M1.02

© Leo A Daly Company 2003

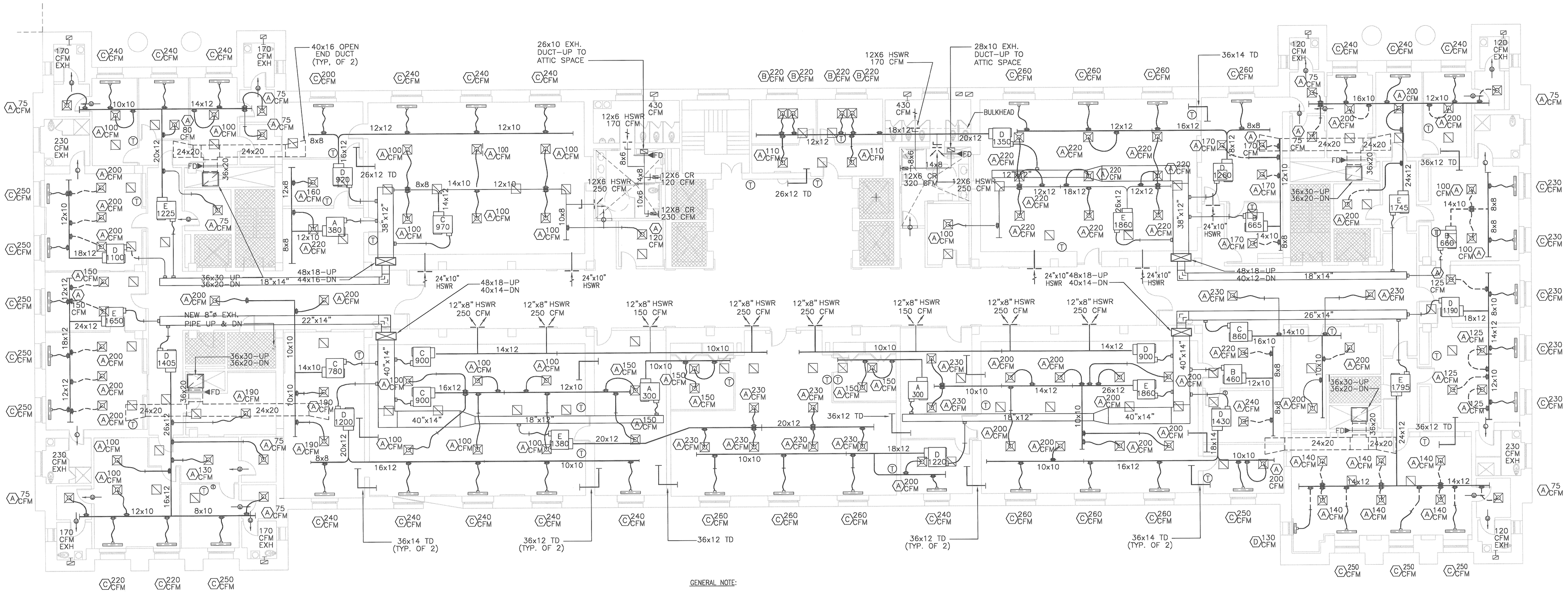

GENERAL NOTE:

1. CONTROL CONTRACTOR SHALL PROVIDE THE LOW VOLTAGE POWER FOR ALL VAV UNITS, THERMOSTAT, ETC..

Interior Improvements to DC Superior Courts Building 'B'

409 E Street, NW
Washington, DC 20001

U.S. General Services Administration
301 7th Street, SW, Room 2021
Washington, DC 20407

LEO A DALY
1201 Connecticut Ave, NW
Washington DC 20036 USA
Tel 202-861-4600 Fax 202-872-8530

Dalco
10005 Old Columbia Road Suite L261
Columbia, MD 21046
Tel: 410-290-8827
Fax: 410-290-8812

Contractor
Address

KEY PLAN

ISSUES / REVISIONS

NO.	DESCRIPTION	DATE

FILE LOG

ACTIVITY	REFERENCE	BY
Manager		
Design		CJKD
Draw		
Draw		
Draw		KA
Check		CJKD

REGISTRATION

JOB No 52010300

CONSTRUCTION PACKAGE

ISSUED FOR CONSTRUCTION (FINAL) APRIL 8, 2003

MECHANICAL
THIRD FLOOR PLAN

M1.03

© Leo A Daly Company 2003

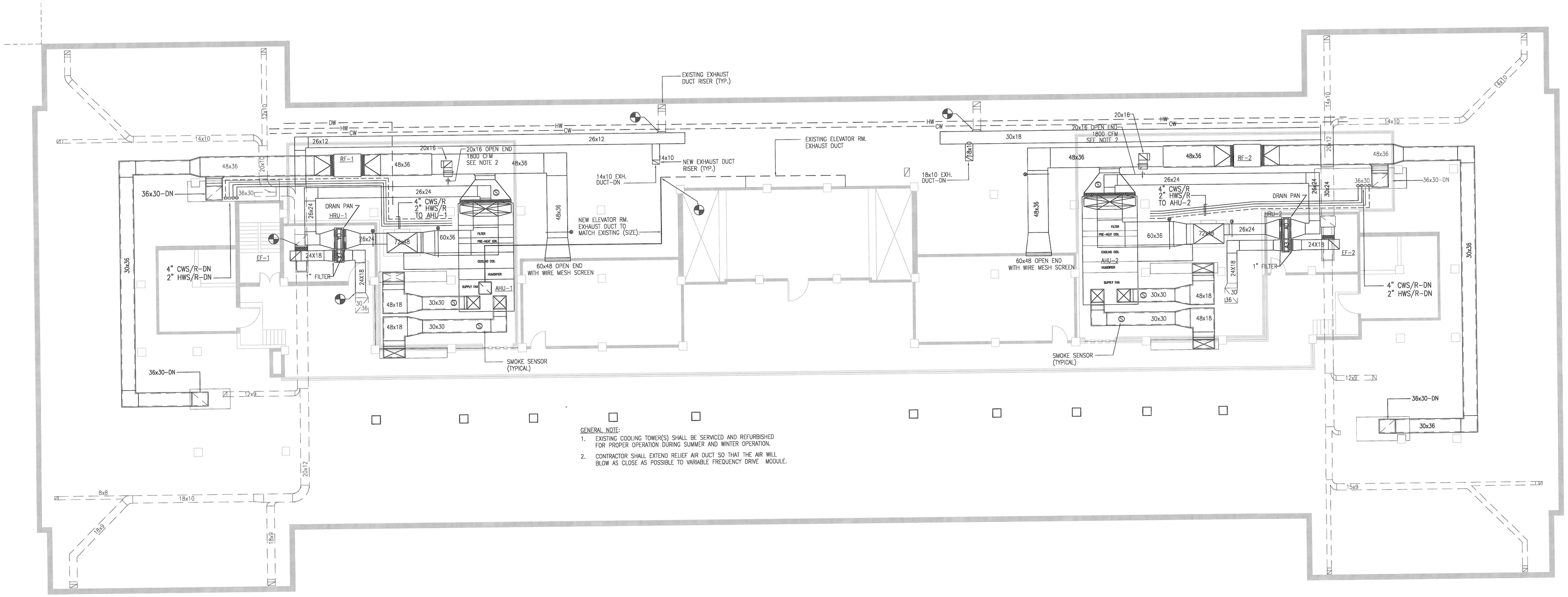

GENERAL NOTE:

1. EXISTING COOLING TOWER(S) SHALL BE SERVICED AND REFURBISHED FOR PROPER OPERATION DURING SUMMER AND WINTER OPERATION.
2. CONTRACTOR SHALL EXTEND RELIEF AIR DUCT SO THAT THE AIR WILL BLOW AS CLOSE AS POSSIBLE TO VARIABLE FREQUENCY DRIVE MODULE.

Interior Improvements to DC Superior Courts Building 'B'

409 E Street, NW
Washington, DC 20001

U.S. General Services Administration
301 7th Street, SW, Room 2021
Washington, DC 20407

LEO A DALY
PLANNING ARCHITECTURE ENGINEERING INTERIORS
EST. 1915
1201 Connecticut Ave, NW
Washington DC 20036 USA
Tel 202-861-4600 Fax 202-872-8530

Dalco
10005 Old Columbia Road Suite L261
Columbia, MD 21046
Tel: 410-290-8827
Fax: 410-290-8812

Contractor
Address

KEY PLAN

ISSUES / REVISIONS

NO.	DESCRIPTION	DATE

FILE LOG

ACTIVITY	REFERENCE	BY
Manager		
Design		GSD
Draw		
Draw		
Draw		EA
Check		GSD

REGISTRATION

JOB No 52010300

CONSTRUCTION PACKAGE

ISSUED FOR CONSTRUCTION (FINAL) APRIL 8, 2003

MECHANICAL
ATTIC FLOOR PLAN

M1.04

© Leo A Daly Company 2003

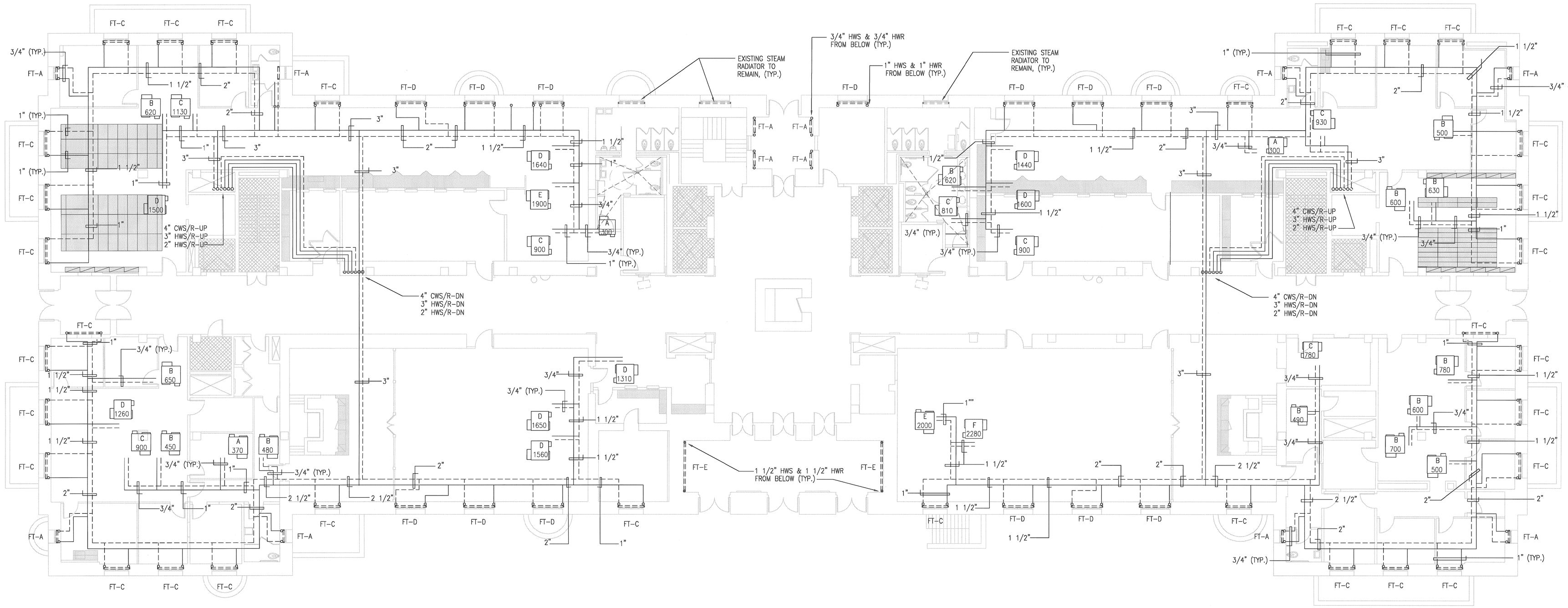

Interior Improvements to DC Superior Courts Building 'B'

409 E Street, NW
Washington, DC 20001

U.S. General Services Administration
301 7th Street, SW, Room 2021
Washington, DC 20407

LEO A DALY
PLANNING ARCHITECTURE ENGINEERING INTERIORS
EST. 1915

1201 Connecticut Ave, NW
Washington DC 20036 USA
Tel 202-861-4600 Fax 202-872-8530

Dalco INCORPORATED

10005 Old Columbia Road Suite L261
Columbia, MD 21046
Tel: 410-290-8827
Fax: 410-290-8812

Contractor
Address

KEY PLAN

ISSUES / REVISIONS

NO.	DESCRIPTION	DATE

FILE LOG

ACTIVITY	REFERENCE	BY
Manager		
Design		GSD
Draw		
Draw		
Draw		KA
Check		GSD

REGISTRATION

JOB No 52010300

CONSTRUCTION PACKAGE

ISSUED FOR CONSTRUCTION
(FINAL) APRIL 8, 2003

HEATING
FIRST FLOOR PLAN

M2.01

© Leo A Daly Company 2003

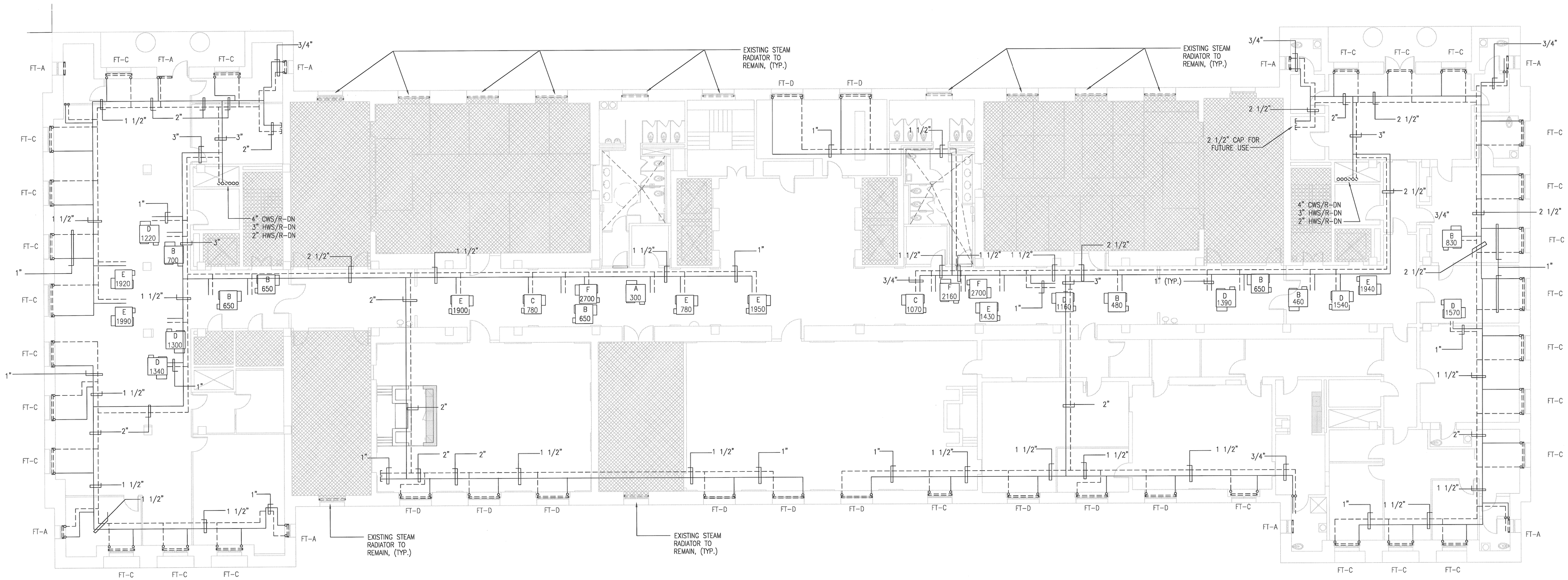

Interior Improvements to DC Superior Courts Building 'B'

409 E Street, NW
Washington, DC 20001

U.S. General Services Administration
301 7th Street, SW, Room 2021
Washington, DC 20407

LEO A DALY
PLANNING ARCHITECTURE ENGINEERING INTERIORS
LEI: M/B

1201 Connecticut Ave, NW
Washington DC 20036 USA
Tel 202-861-4600 Fax 202-872-8530

Dalco Incorporated
10005 Old Columbia Road Suite L261
Columbia, MD 21046
Tel: 410-290-8827
Fax: 410-290-8812

Contractor
Address

KEY PLAN

ISSUES / REVISIONS

NO.	DESCRIPTION	DATE

FILE LOG

ACTIVITY	REFERENCE	BY
Manager		
Design		GSD
Draw		
Draw		
Draw		KA
Check		GSD

REGISTRATION

JOB No 52010300

CONSTRUCTION PACKAGE

ISSUED FOR CONSTRUCTION (FINAL) APRIL 8, 2003

HEATING
SECOND FLOOR PLAN

M2.02

© Leo A Daly Company 2003

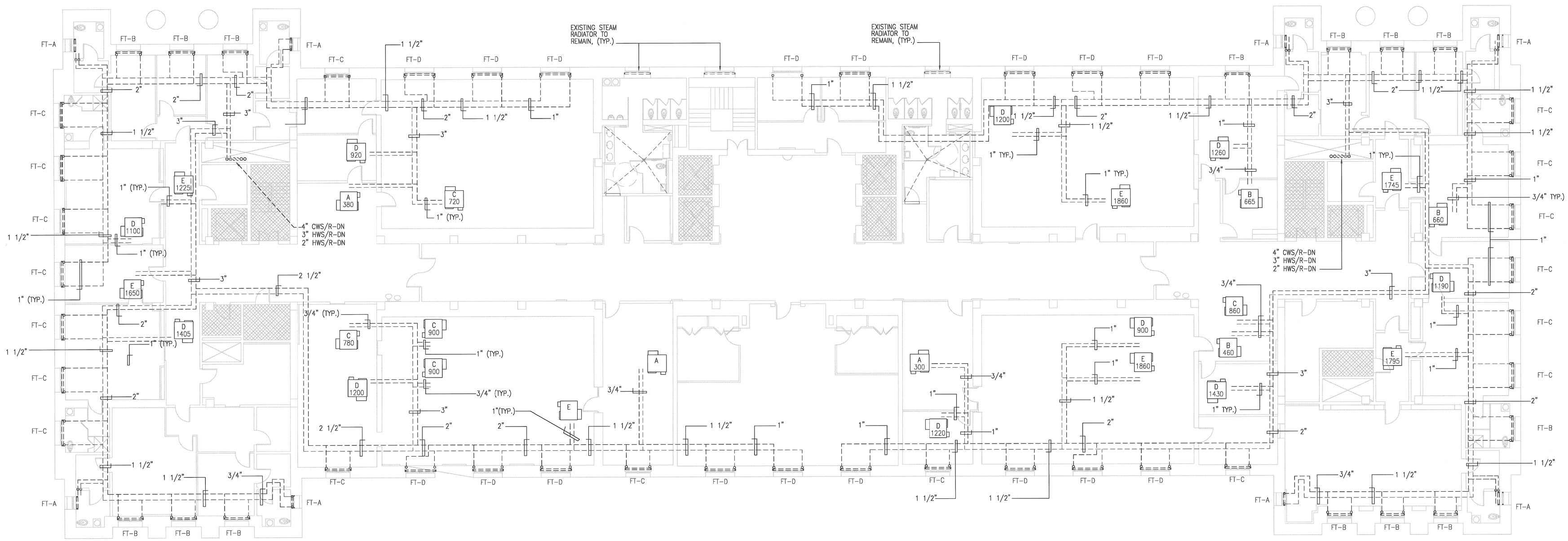

Interior Improvements to DC Superior Courts Building 'B'

409 E Street, NW
Washington, DC 20001

U.S. General Services Administration
301 7th Street, SW, Room 2021
Washington, DC 20407

LEO A DALY
1201 Connecticut Ave, NW
Washington DC 20036 USA
Tel 202-861-4600 Fax 202-872-8530

Dalco
10005 Old Columbia Road Suite L261
Columbia, MD 21046
Tel: 410-290-8827
Fax: 410-290-8812

Contractor
Address

KEY PLAN

ISSUES / REVISIONS

NO.	DESCRIPTION	DATE

FILE LOG

ACTIVITY	REFERENCE	BY
Manager		
Design		CND
Draw		
Draw		
Draw		KA
Check		CND

REGISTRATION

JOB No 52010300

CONSTRUCTION PACKAGE

ISSUED FOR CONSTRUCTION (FINAL) APRIL 8, 2003

HEATING
THIRD FLOOR PLAN

M2.03

© Leo A Daly Company 2003

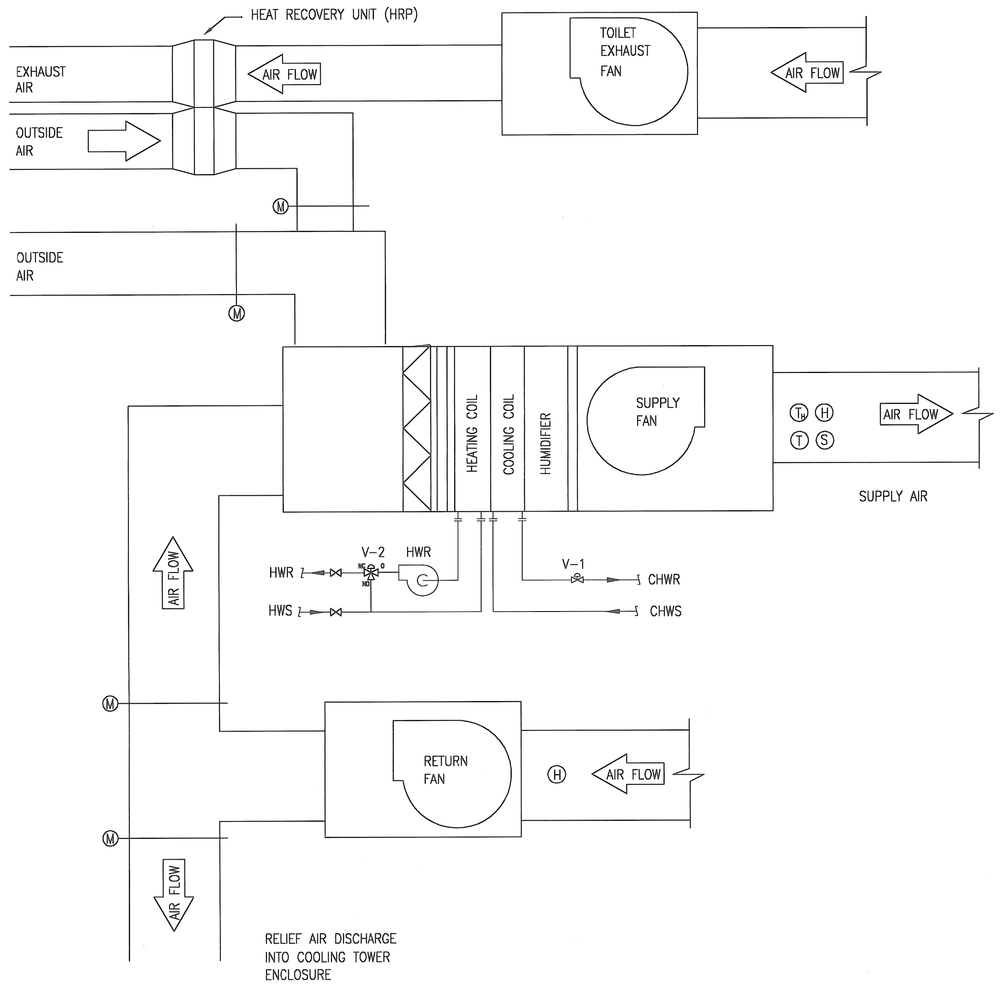

HEAT RECOVERY SCHEME AT AHU'S IN THE ATTIC

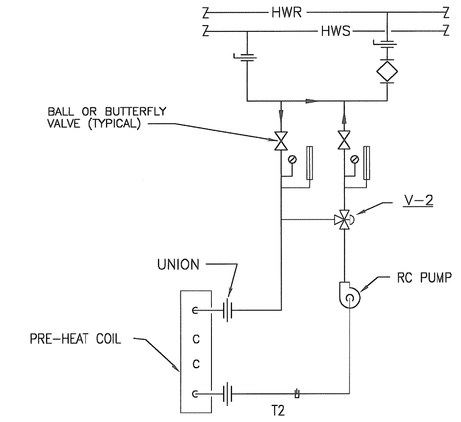

AHU PRE-HEAT COIL FLOW DIAGRAM

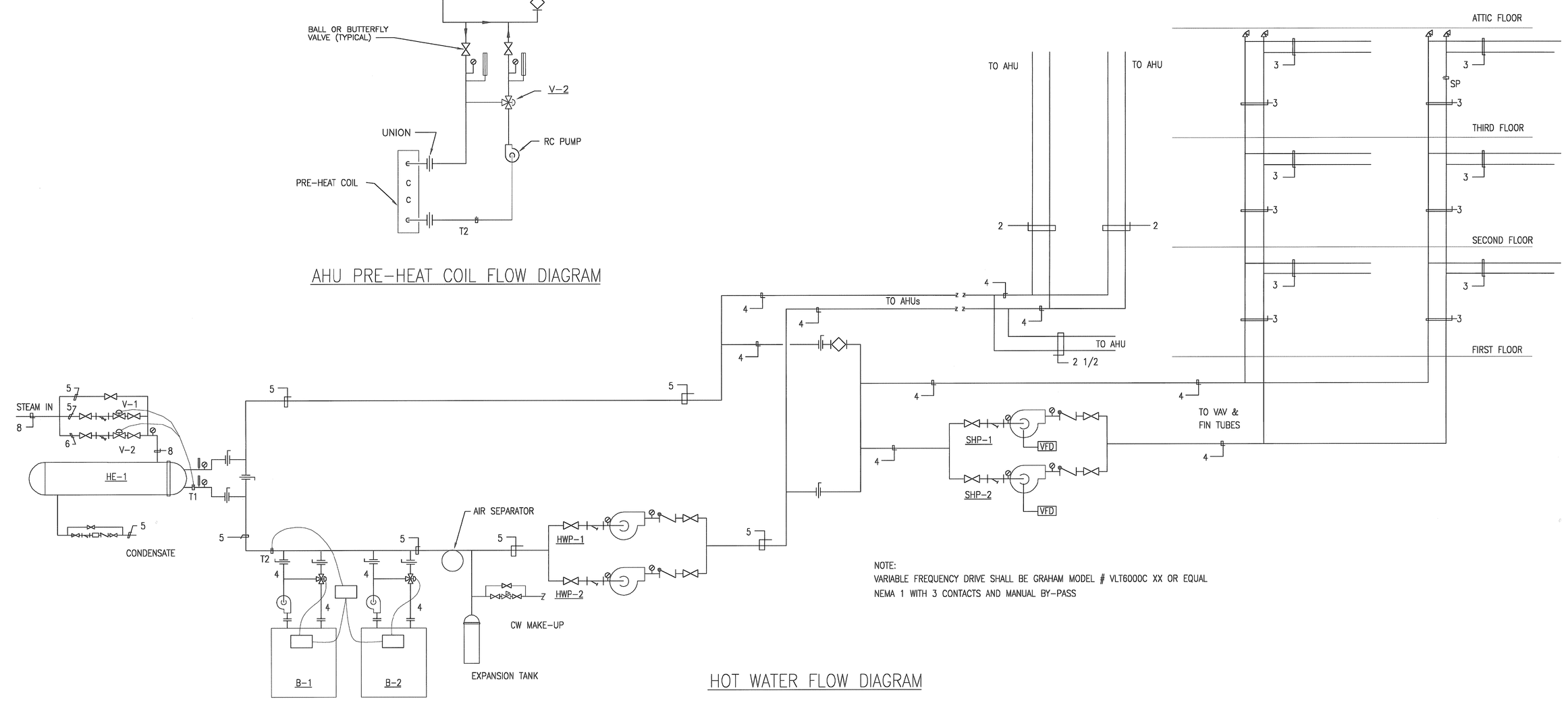

NOTE:
VARIABLE FREQUENCY DRIVE SHALL BE GRAHAM MODEL # VLT6000C XX OR EQUAL
NEMA 1 WITH 3 CONTACTS AND MANUAL BY-PASS

HOT WATER FLOW DIAGRAM

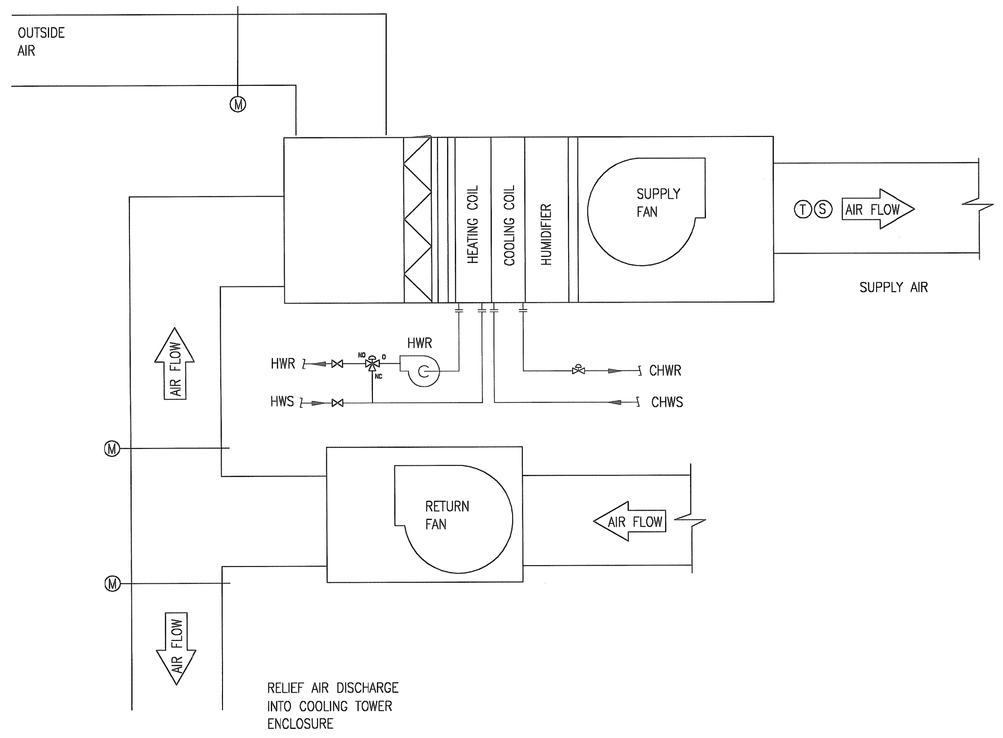

AHU SCHEME AT THE BASEMENT

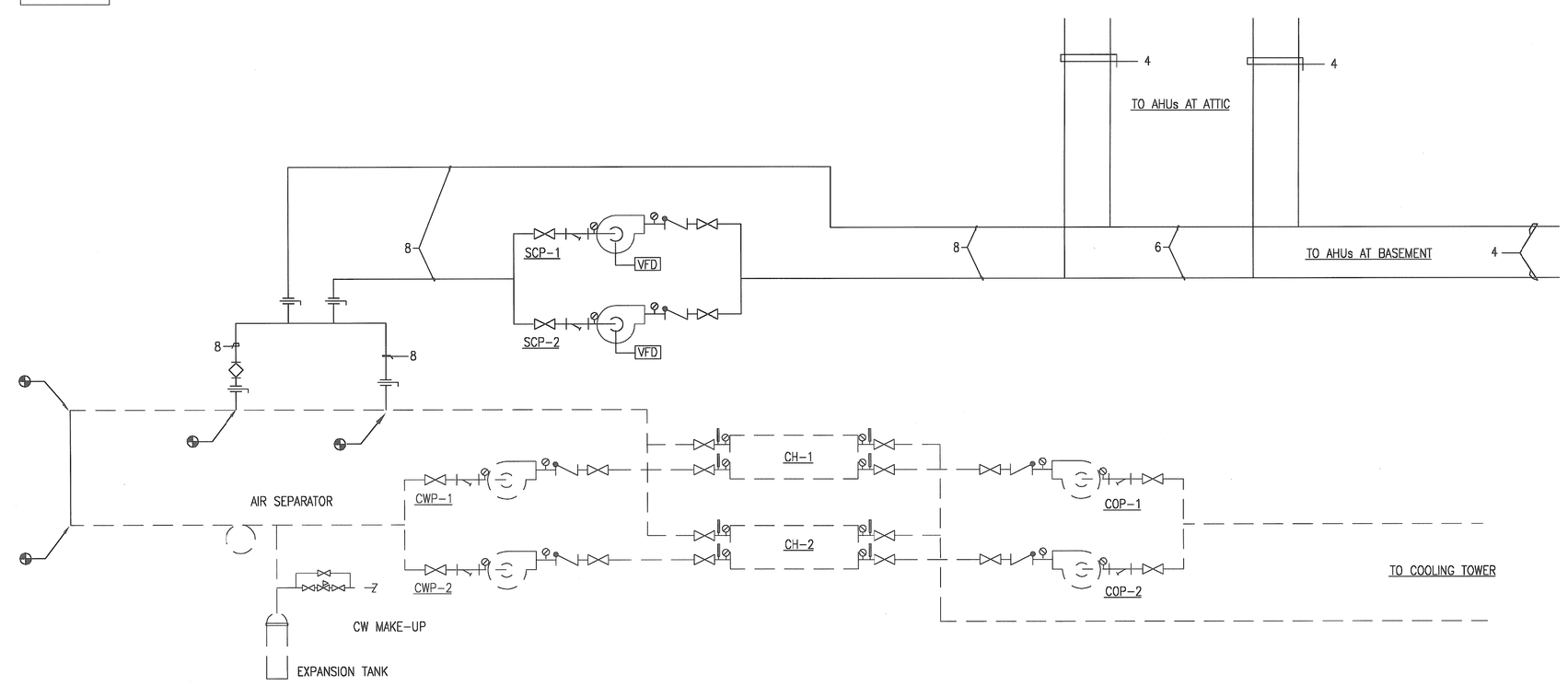

CHILLED WATER FLOW DIAGRAM

Interior Improvements to DC Superior Courts Building 'B'

409 E Street, NW
Washington, DC 20001

U.S. General Services Administration
301 7th Street, SW, Room 2021
Washington, DC 20407

LEO A DALY
PLANNING ARCHITECTURE ENGINEERING INTERIORS
EST. 1915
1201 Connecticut Ave, NW
Washington DC 20036 USA
Tel 202-861-4600 Fax 202-872-8530

Dalco INCORPORATED
10005 Old Columbia Road Suite L261
Columbia, MD 21046
Tel: 410-290-8827
Fax: 410-290-8812

Contractor
Address

KEY PLAN

ISSUES / REVISIONS

NO.	DESCRIPTION	DATE

FILE LOG

ACTIVITY	REFERENCE	BY
Manager		
Designer		CSD
Draw		
Draw		
Draw		KA
Check		CSD

REGISTRATION

JOB No 52010300

CONSTRUCTION PACKAGE

ISSUED FOR CONSTRUCTION (FINAL) APRIL 8, 2003

MECHANICAL FLOW DIAGRAM & SEQUENCE OF OPERATION

M3.01

© Leo A Daly Company 2003

HUMIDIFIER SCHEDULE

TAG	LOCATION	CAPACITY LBS/HR	Amp	KW	ELEC DATA V/P/Hz	MANUFACTURER / MODEL #
HUM-1	AHU-1	200	137.8	49.6	208/3/60	STULZ MODEL SMU 603
HUM-2	AHU-2	200	137.8	49.6	208/3/60	STULZ MODEL SMU 603
HUM-3	AHU-3	200	137.8	49.6	208/3/60	STULZ MODEL SMU 603

HOT WATER FIN TUBE RADIATION

TAG	ACTIVE LENGHT	MIN VEL FPS	MIN GPM	BTUH/LF	EWT °F	ENCLOSURE TYPE	MANUFACTURER / MODEL #
FT-A	2'-0"	3	3	820	180	VULCAN FRI 212 16-GAUGE CABINET PROVIDE ENCLOSURE WALL TO WALL	VULCAN FRI 212
FT-B	4'-0"	3	4	820	180		
FT-C	5'-0"	3	5	820	180		
FT-D	6'-0"	3	5	820	180		
FT-E	8'-0"	3	8	820	180		

FAN SCHEDULE

TAG	SERVICE	TYPE	CFM	E.S.P. IN WC	MOTOR HP	MOTOR VOLTS/ PHASE	DAMPER GRAV / MOTOR	CONTROL	MANUFACTURER / MODEL #
RF-1	AHU-1	INLINE	26,000	1.00	15	208/3/60	- -	DDC	GREENHECK QEI SEE NOTE 1, 2
RF-2	AHU-2	INLINE	26,000	1.00	15	208/3/60	- -	DDC	GREENHECK QEI SEE NOTE 1, 2
RF-3	AHU-3	INLINE	26,400	1.00	15	208/3/60	- -	DDC	GREENHECK QEI SEE NOTE 1, 2
EF-1	TOILET	UTILITY	4450	1.25	2	208/3/60	- -	DDC	GREENHECK SWB SEE NOTE 1
EF-2	TOILET	UTILITY	5140	1.25	2	208/3/60	- -	DDC	GREENHECK SWB SEE NOTE 1
EF-3	GEN. RM.	INLINE	1000	0.375	1/4	120/1/60	- -	DDC	GREENHECK BSQ 100-4 SEE NOTE 1

NOTES:
1) PROVIDE SPRING VIBRATION ISOLATORS
2) VARIABLE FREQUENCY DRIVE

PUMP SCHEDULE

TAG	SERVICE	TYPE	GPM	HEAD IN FT	MOTOR HP	MOTOR VOLTS/ PHASE	CONTROL	MANUFACTURER / MODEL #
SCP-1	CW SYSTEM	END SUCTION	840	55	20	208/3/60	DDC	TACO TYPE FE4008
SCP-2	STAND-BY	END SUCTION	840	55	20	208/3/60	DDC	TACO TYPE FE4008
HWP-1	HW SYSTEM	END SUCTION	420	70	15	208/3/60	DDC	TACO TYPE FE3010
HWP-2	STAND-BY	END SUCTION	420	70	15	208/3/60	DDC	TACO TYPE FE3010
SHP-1	SECONDARY	END SUCTION	260	55	10	208/3/60	DDC	TACO TYPE FE2510
SHP-2	STAND-BY	END SUCTION	260	55	10	208/3/60	DDC	TACO TYPE FE2510
RCP-1	AHU-1	INLINE	30	25	1	208/3/60	INTERLOCK WITH AHU-1 AND OA TEMPERATURE	TACO TYPE VI 1506
RCP-2	AHU-2	INLINE	30	25	1	208/3/60	INTERLOCK WITH AHU-2 AND OA TEMPERATURE	TACO TYPE VI 1506
RCP-3	AHU-3	INLINE	43	25	1	208/3/60	INTERLOCK WITH AHU-3 AND OA TEMPERATURE	TACO TYPE VI 1506

HOT WATER BOILER SCHEDULE

TAG	FUEL	HEATING CAPACITY INPUT MBH	HEATING CAPACITY OUTPUT MBH	WATER FLOW GPM	WATER FLOW PD (FT)	TEMP RISE	PROTOTYPE
B-1, B-2	NAT GAS	1950	1638	100	18	30°F	RBI DOMINATOR SERIES MODEL DB1950

NOTES:
1. UNIT TO HAVE 4-STAGE FIRING OPERATION.
2. BOILER SHALL BE PROVIDED WITH INLINE CIRCULATING PUMP, 1 HP @ 208/3/60 AND A 15 AMP CKT @ 115/1/60 FOR CONTROL AND BOILER OPERATION..

CABINET UNIT HEATERS AND UNIT HEATERS

TAG	MANUFACTURER MODEL #	TYPE	SERVICE	FAN ACFM MAX	FAN MOTOR HP	HEATING COIL MBH TOTAL	HEATING COIL E.A.T. DB	HEATING COIL E.W.T.	HEATING COIL L.W.T.	HEATING COIL GPM	PIPE SIZE	VOLTS/ PHASE	REMARKS
CUH - 3	STERLING / F-1000-02	WALL MOUNTED	TOILET RM	230	1/10	8.0	60	190	160	0.5	3/4"	115/1	1,2,3
UH - 1	TRANE MODEL 38-S	CEILING HUNG	MECHANICAL RM	540	1/20	14	60	190	160	1.4	3/4"	115/1	1,2,3
UH - 2	TRANE MODEL 38-S	CEILING HUNG	MECHANICAL RM	540	1/20	14	60	190	160	1.4	3/4"	115/1	1,2,3

NOTES:
1. MECH CONTRACTOR TO FURNISH ELECTRIC DISCONNECT. ELECTRICAL CONTRACTOR SHALL INSTALL DISCONNECT.
2. PROVIDE UNIT MOUNTED RETURN AIR THERMOSTAT.
3. COORDINATE COLOR WITH ARCHITECT.

AIR HANDLING UNIT SCHEDULES

TAG	LOCATION	SUPPLY FAN CFM (1)	SUPPLY FAN O.A. CFM (MIN.)	SUPPLY FAN ESP (1) IN WC	SUPPLY FAN MOTOR HP	COOLING COIL MBH CAPACITY TOTAL	COOLING COIL MBH CAPACITY SENS	COOLING COIL L.A.T. DBF	COOLING COIL L.A.T. WBF	COOLING COIL GPM	COOLING COIL E.W.T.	COOLING COIL W.P.D. FT	HEATING COIL MBH	HEATING COIL GPM	HEATING COIL EAT	HEATING COIL EWT	HEATING COIL W.P.D. FT	ELECTRICAL V/P/H	MANUFACTURER / MODEL #
AHU-1	ATTIC	31,000	6,500	1.75	40	1325	1063	52.6°	52.2°	265	45	20	450	30	38°	180°	10	208/3/60	CARRIER AHU BUILDER SIZE 61
AHU-2	ATTIC	31,000	6,500	1.75	40	1325	1063	52.6°	52.2°	265	45	20	450	30	38°	180°	10	208/3/60	CARRIER AHU BUILDER SIZE 61
AHU-3	BASEMENT	30,000	8,900	1.75	40	1405	1059	52.8°	52.4°	281	45	20	650	43	38°	180°	10	208/3/60	CARRIER AHU BUILDER SIZE 61

NOTES:
1) EXTERNAL STATIC PRESSURES DO NOT INCLUDE INTERNAL COMPONENT STATIC PRESSURE LOSS.
2) OUTDOOR AIR ECONOMIZER
3) PROVIDE AIR MONITOR FAN INLET AIRFLOW TRAVERSE PROBE.

AIR TO AIR HEAT EXCHANGER

TAG	SERVICE	CONDITION	OUTSIDE AIR CFM	OUTSIDE AIR EAT °Fdb/°Fwb	OUTSIDE AIR LAT °Fdb/°Fwb	OUTSIDE AIR E.S.P. IN WC	OUTSIDE AIR BTUH	EXHAUST AIR CFM	EXHAUST AIR EAT °Fdb/°Fwb	EXHAUST AIR LAT °Fdb/°Fwb	EXHAUST AIR E.S.P. IN WC	EXHAUST AIR BTUH	MAX FACE VELOCITY FPM	MANUFACTURER / MODEL #
HRP-1	AHU-1	SUMMER	6500	95.0/78.0	88.3/76.3	0.54	44,730	4500	80.0/66.6	90.1/69.8	0.54	44,730	450	HEATPIPE TECHNOLOGIES
		WINTER		12.0/11.0	41.4/30.6	0.54	190,740		75.0/56.5	36.0/36.0	0.54	190,740		
HRP-2	AHU-2	SUMMER	6500	95.0/78.0	88.3/76.3	0.54	44,730	5140	80.0/66.6	90.1/69.8	0.54	44,730	450	HEATPIPE TECHNOLOGIES
		WINTER		12.0/11.0	41.4/30.6	0.54	190,740		75.0/56.5	36.0/36.0	0.54	190,740		

STEAM TO WATER HEAT EXCHANGER

TAG	SERVICE	WATER SIDE GPM	WATER SIDE EWT °F	WATER SIDE LWT °F	WATER SIDE BTUH	WATER SIDE WPD FT	STEAM SIDE INITIAL PRES PSI	STEAM SIDE FINAL PRES PSI	STEAM SIDE CAPACITY LBS/HR	STEAM SIDE CONTROL VALVE LBS/HR	CONDENSATE SIDE TRAP CAPACITY LBS/HR	CONDENSATE SIDE PRESSURE DIFFERENTIAL	MANUFACTURER / MODEL #
HE-1	HOT WATER	410	160	180	4,100,000	15	15	5	4225	V-1 = 1500 LBS/HR V-2 = 2725 LBS/HR	12675	5 PSI	BELL & GOSSETT

NOTES:
1) CONDENSATE TRAP SHALL BE FLOAT AND THERMOSTATIC TYPE

SERIES FAN POWERED TERMINAL BOX SCHEDULE

MARK	MAX. BOX CFM 0" ESP	INLET SIZE	PRIMARY CFM MIN.	PRIMARY CFM MAX.	FAN CFM MIN.	FAN CFM MAX.	FAN CFM E.S.P.	FAN HP	ELEC DATA	HOT WATER HEATING COIL DATA BTUH	EA(°F)	EWT(°F)	GPM	WTR.PD.	AIR PD.	PIPE RUNOUT IN/OUT	TYPE	REMARKS (PROTOTYPE)
A	500	6"	90	400	300	400	0.30	1/10	120/1/60	11230	64°	180°	1.12	5	0.15	3/4"	SERIES	CARRIER MODEL 45J, SIZE 2
B	900	8"	170	700	450	700	0.40	1/4		19600	64°	180°	2.00	5	0.15	3/4"	SERIES	CARRIER MODEL 45J, SIZE 3
C	1400	10"	250	1100	780	1100	0.45	1/4		30880	64°	180°	3.10	5	0.15	3/4"	SERIES	CARRIER MODEL 45J, SIZE 4
D	2100	12"	360	1680	300	1680	0.45	1/2	208/3/60	34000	64°	180°	3.40	5	0.15	1"	SERIES	CARRIER MODEL 45J, SIZE 5
E	2500	14"	500	2000	450	2000	0.45	3/4		47000	64°	180°	4.70	5	0.15	1"	SERIES	CARRIER MODEL 45J, SIZE 6
F	4000	16"	650	3000	780	3000	0.45	(2) 3/4		59800	64°	180°	5.96	5	0.15	1 1/2"	SERIES	CARRIER MODEL 45J, SIZE 7
B1	875	8"	280	700	485	700	0.40	1/4	120/1/60	13300	64°	180°	1.35	5	0.15	3/4"	SERIES	CARRIER MODEL 45K, SIZE 3
C1	1300	10"	420	1040	720	1040	0.45	1/4		21500	64°	180°	2.15	5	0.15	3/4"	SERIES	CARRIER MODEL 45K, SIZE 4
D1	1750	12"	560	1400	1050	1400	0.45	1/2	208/3/60	28950	64°	180°	2.90	5	0.15	3/4"	SERIES	CARRIER MODEL 45K, SIZE 5
E1	2500	14"	800	2000	1450	2000	0.45	3/4		41350	64°	180°	4.14	5	0.15	1"	SERIES	CARRIER MODEL 45K, SIZE 6
F1	2875	16"	920	2300	1450	2300	0.45	1		45475	64°	180°	4.57	5	0.15	1"	SERIES	CARRIER MODEL 45K, SIZE 7

NOTES:
1. TERMINALS MUST MEET THE SOUND POWER REQUIREMENTS LISTED IN THE BASE BUILDING SPECIFICATION.
2. PROVIDE EACH TERMINAL WITH REMOTE NON-FUSED DISCONNECT SWITCH MOUNTED TO BUILDING STRUCTURE.
3. CONTRACTORS TO FURNISH 12" LONG RIGID ROUND INLET DUCT OF THE SAME DIAMETER AS PRIMARY VALVE CONNECTED TO VAV UNIT COMPLETE WITH INCREASER TO ACCOMODATE INLET DUCT SIZE AS SCHEDULED.
4. INLET SIZE SCHEDULED IS MINIMUM DIAMETER DUCT RUNOUT.

GRILLE AND REGISTER SCHEDULE

MARK	MAX. CFM	REGISTER SIZE	PANEL SIZE (IN.)	MAX. NC	TYPE	BASIS OF DESIGN
⧄	500	- - -	24" x 24"	25	2-3/4"SLOT	TITUS MODEL MBR-30, 2-3/4"SLOT, LIGHT SHEILD. SEE NOTE 1, 2, 3
CR	AS INDICATED	AS INDICATED	AS INDICATED	30	REGISTER	TITUS MODEL 300/350, 0° DEFLECTION, TYPE 1 BORDER
HSWR	AS INDICATED	AS INDICATED	AS INDICATED	30	REGISTER	TITUS MODEL 300/350, 22.5° DEFLECTION, TYPE 1 BORDER.
LSWR	AS INDICATED	AS INDICATED	AS INDICATED	30	REGISTER	TITUS MODEL 300/350, 22.5° DEFLECTION, TYPE 1 BORDER.

1. GRILLES AND REGISTERS SHALL BE PROVIDED WITHOUT VOLUME DAMPER. PROVIDE DAMPER AT SPIN-IN FITTINGS OR AS FAR AWAY AS POSSIBLE FROM GRILLE.
2. RETURN DIFFUSER SHALL BE PROVIDED WITHOUT PATTERN CONTROLLER.
3. CONTRACTOR SHALL PROVIDE DIFFUSER FACE WITH CEILING TILE MATCHING THE SORROUNDING CEILING.

CR - CEILING REGISTER
HSWR - HIGH SIDE WALL REGISTER. TOP OF REGISTER SHALL BE 6" BELOW CEILING WHERE THERE IS NO CEILING, INSTALL AS HIGH AS POSSIBLE, OR DUCT MOUNTED.
LSWR - LOW SIDE WALL REGISTER. BOTTOM OF REGISTER SAHLL BE 6" A F F.

DIFFUSER SCHEDULE

MARK	MAX CFM	NECK OR COLLAR	DIFFUSER SIZE (IN.)	MAX. PRES. DROP (IN. WG)	MAX. NC	TYPE	FLOW PATTERN	BASIS OF DESIGN
A	240	8"ø	24 x 24	0.09	25	2-3/4" SLOT PLAQUE FACE	4-WAY (ADJ.) 4-WAY	TITUS MODEL MBI-30 (SEE NOTE 1, 2, 5) TITUS DAT NT MODEL (SEE NOTE 1)
B	275	10"ø	24 x 24	0.10	25	2-3/4" SLOT PLAQUE FACE	4-WAY (ADJ.) 4-WAY	TITUS MODEL MBI-30 (SEE NOTE 1, 2, 5) TITUS DAT NT MODEL (SEE NOTE 1)
C	65/FT	- -	2-1"SLOT	0.09	25	LINEAR SLOT	ADJUSTABLE	TITUS MODEL ML-39, (SEE NOTE 3)
D	65/FT	- -	2-1"SLOT	0.09	25	LINEAR SLOT	ADJUSTABLE	TITUS MODEL ML-39, (SEE NOTE 4)

NOTE:
1. DIFFUSER SHALL BE PROVIDED WITHOUT VOLUME DAMPER. DAMPER SHALL BE PROVIDED AT SPIN-IN FITTINGS.
2. CONTRACTOR SHALL PROVIDE DIFFUSER FACE WITH CEILING TILE MATCHING THE SORROUNDING CEILING.
3. 4"-0", 2@1" SLOT DIFFUSER WITH 4' LONG MPI-39 SUPPLY PLENUM BOX
4. 2"-0", 2@1" SLOT DIFFUSER WITH 2' LONG MPI-39 SUPPLY PLENUM BOX
5. DIFFUSER MODEL SHALL BE USE IN COURT ROOMS AND ROOMS WITH 10'-0" OR HIGHER CEILING ONLY.

Interior Improvements to DC Superior Courts Building 'B'
409 E Street, NW
Washington, DC 20001

U.S. General Services Administration
301 7th Street, SW, Room 2021
Washington, DC 20407

LEO A DALY
1201 Connecticut Ave, NW
Washington DC 20036 USA
Tel 202-861-4600 Fax 202-872-8530

Dalco
10005 Old Columbia Road Suite L261
Columbia, MD 21046
Tel: 410-290-8827
Fax: 410-290-8812

Contractor
Address

KEY PLAN

ISSUES / REVISIONS

NO.	DESCRIPTION	DATE

FILE LOG

ACTIVITY	REFERENCE	BY
Manager		
Design		CSD
Draw		
Draw		
Draw		EA
Check		CSD

REGISTRATION

JOB No 52010300

CONSTRUCTION PACKAGE

ISSUED FOR CONSTRUCTION (FINAL) APRIL 8, 2003

MECHANICAL SCHEDULES

M4.01

© Leo A Daly Company 2003

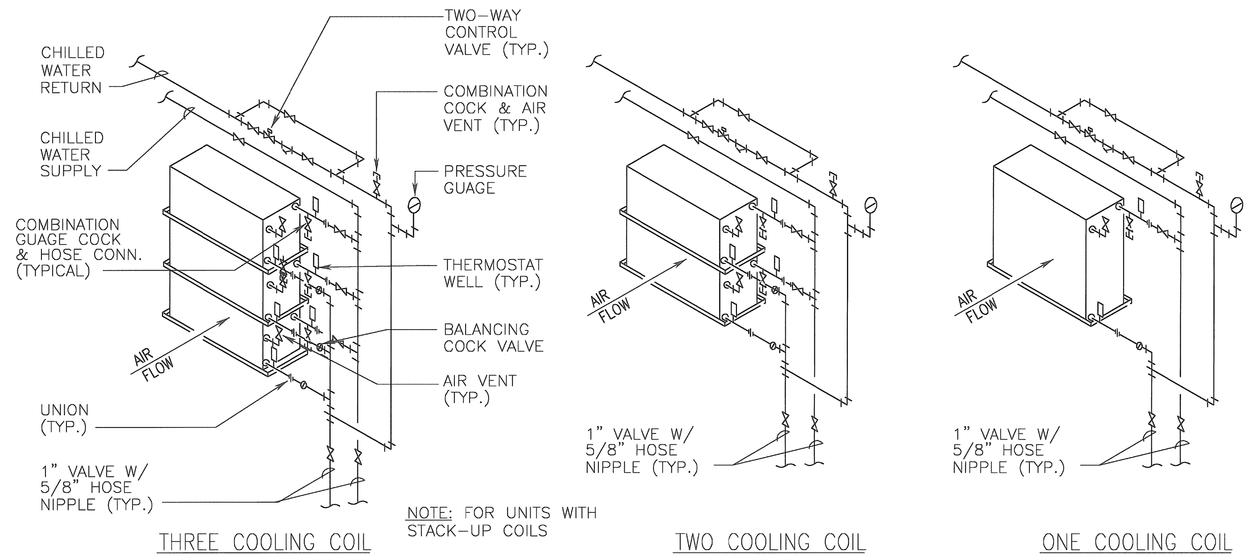

1 / M5.01 COOLING COIL DETAIL
SCALE: NOT TO SCALE

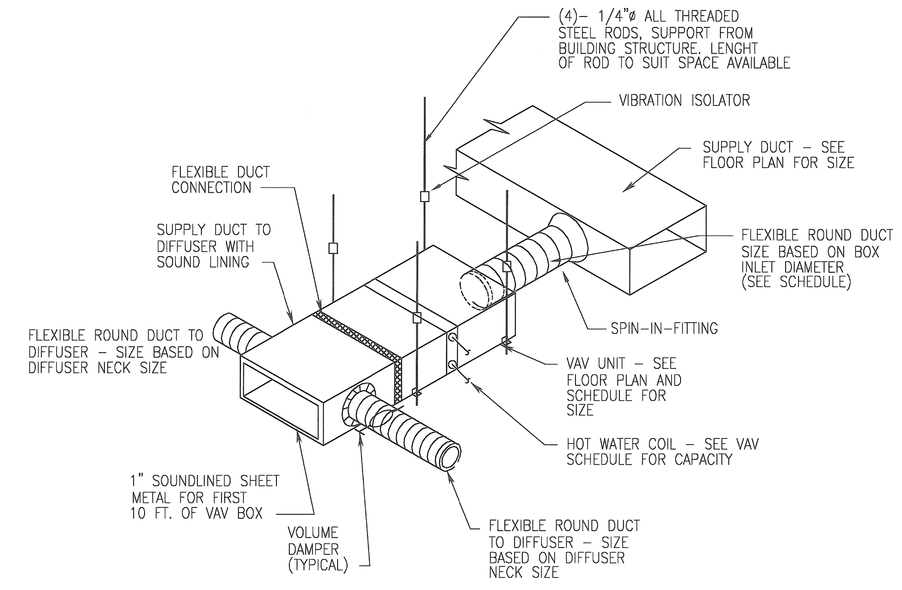

2 / M5.01 AIR TERMINAL VAV UNIT MOUNTING DETAIL
NO SCALE

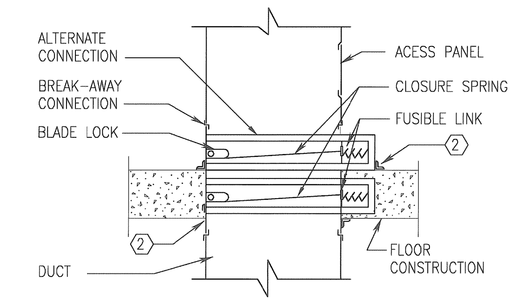

1. RETAINING ANGLES - ENTIRE PERIMETER BOTH SIDES - SECURE TO SLEEVE ONLY.
2. MIN. 10 GA. SLEEVE W/ 1/8" PER FT. CLEARANCE FOR EXPANSION.
3. SIZE OF RETAINING ANGLES, FASTENER SIZE & SPACING, TYPE OF BREAK-AWAY CONNECTION AND INSTALLATION DETAILS SHALL BE IN ACCORDANCE W/ MANUFACTURER'S RECOMMENDATIONS AND SMACNA DETAILS FOR FIRE DAMPERS.
4. ENCASE FIRE DAMPER W/ FIRE-RESISTIVE MATERIALS IN ACCORDANCE W/ SCHEDULE 1 - SMACNA FD GUIDE IF DUCTWORK IS NOT INSULATED.

3 / M5.01 FIRE DAMPER DETAIL
NO SCALE

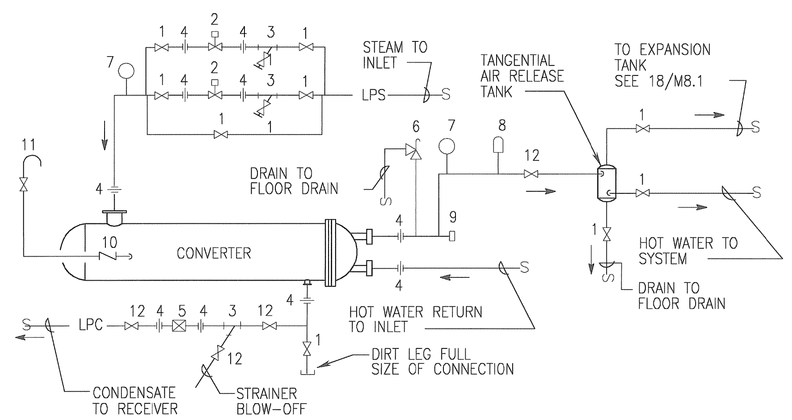

1. BUTTERFLY VALVE
2. AUTOMATIC CONTROL VALVE
3. STRAINER
4. UNION
5. F & T TRAP
6. SAFETY RELIEF VALVE
7. PRESSURE GAGE
8. TERMOMETER & WELL
9. TEMPERATURE SENDING DIVICE
10. 1/2 " OPEN END CHECK VALVE
11. 1/2 " VACUUM BREAKER
12. BALL VALVE

4 / M5.01 STEAM/ WATER CONVERTER DETAIL
NO SCALE

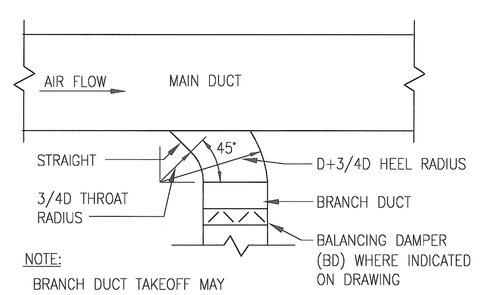

NOTE:
BRANCH DUCT TAKEOFF MAY BE USED ANYWHERE.

5 / M5.01 TYPICAL BRANCH CONNECTION
NO SCALE

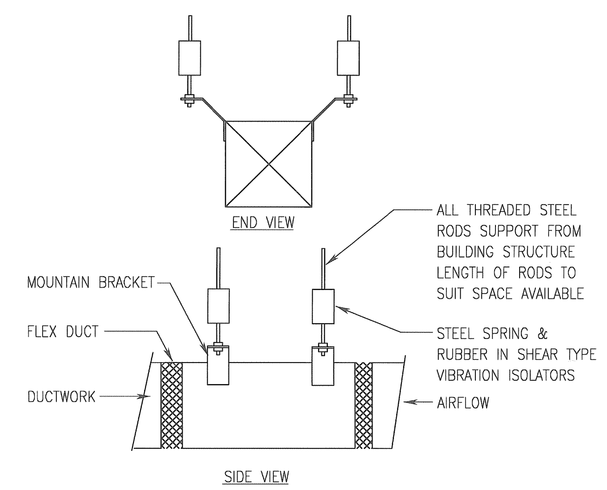

6 / M5.01 IN-LINE FAN DETAIL
NO SCALE

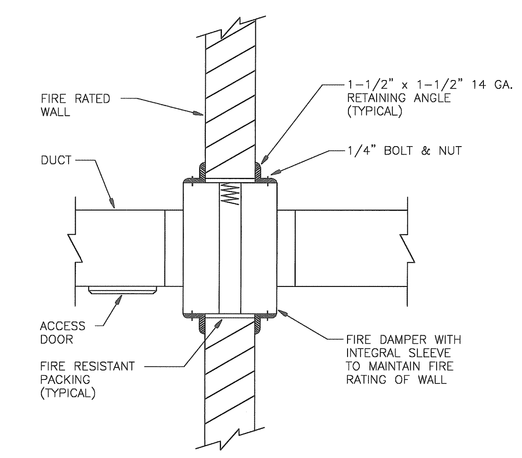

NOTE:
INSTALL FIRE DAMPERS IN ALL RATED WALLS PER NFPA AND LOCAL CODE REQUIREMENTS TO MAINTAIN THE RATING OF THAT ASSEMBLY. REFER TO ARCH. DRAWINGS FOR EXACT RATINGS, LOCATIONS, AND QUANTITIES OF FIRE DAMPERS.

7 / M5.01 VERTICAL FIRE DAMPER DETAIL
NO SCALE

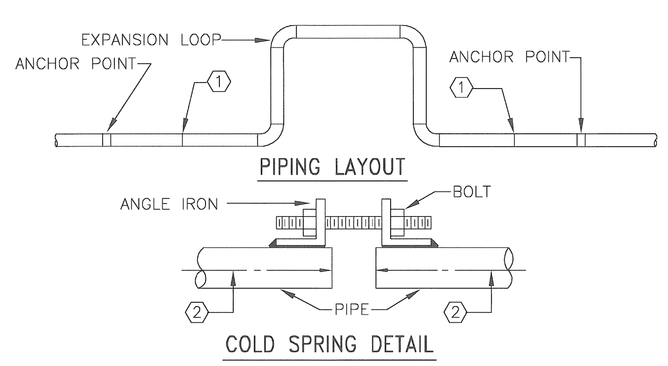

COLD SPRING NOTES:

TOTAL COLD SPRING DIMENSION SHALL BE 1/2 OF TOTAL EXPANSION

INSTALL ALL PIPE LEAVING SPACE AT COLD SPRING LOCATION

TACK ANGLES WITH HOLES TO EACH END OF PIPE. OUT BOLT IN PLACE AND DRAW PIPE ENDS TOGETHER

1 TACK WELD PIPE JOINT

2 KNOCK OFF ANGLES AND COMPLETE WELD

8 / M5.01 EXPANSION LOOP DETAIL

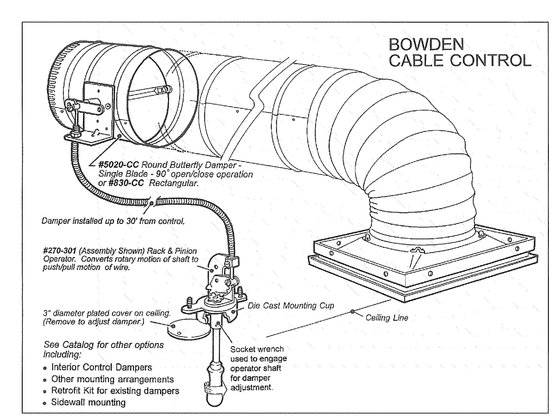

9 / M5.01 SPECIAL VOLUME DAMPER DETAIL
NO SCALE (WHERE APLICABLE)

SPECIAL VOLUME DAMPER NOTE:

ALL VOLUME DAMPERS ABOVE INACCESSIBLE CEILINGS SHALL BE PROVIDED WITH BOWDEN REMOTE CABLE CONTROLS (REGULATORS #2/0-301 AND/OR #2/0-302)AS MANUFACTURED BY YOUNG REGULATOR COMPANY OR APPROVED EQUAL. DAMPERS MOUNTED ON DIFFUSER INLETS OR USE OF CEILING ACCESS PANELS FOR ADJUSTMENT ARE NOT ACCEPTABLE.

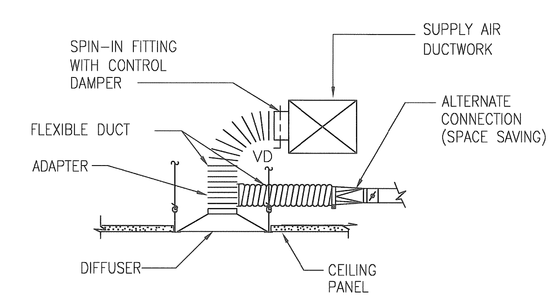

10 / M5.01 TYPICAL DIFFUSER MOUNTING DETAIL
NO SCALE

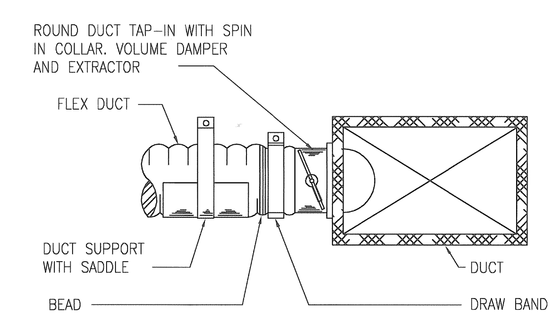

NOTES:
1. FLEXIBLE DUCT SUPPORT SHALL HAVE A MAX. 3'-0" SPACING.
2. FLEXIBLE DUCT SHALL BE U.L. LISTED.
3. SEE SMACNA DUCT CONSTRUCTION STANDARDS FOR ROUND CONNECTIONS TO RECTANGULAR DUCT.

11 / M5.01 FLEXIBLE DUCT INSTALLATION DETAIL
NO SCALE

Interior Improvements to DC Superior Courts Building 'B'

409 E Street, NW
Washington, DC 20001

U.S. General Services Administration
301 7th Street, SW, Room 2021
Washington, DC 20407

LEO A DALY
1201 Connecticut Ave, NW
Washington DC 20036 USA
Tel 202-861-4600 Fax 202-872-8530

Dalco
10005 Old Columbia Road Suite L261
Columbia, MD 21046
Tel: 410-290-8827
Fax: 410-290-8812

Contractor
Address

KEY PLAN

ISSUES / REVISIONS

NO.	DESCRIPTION	DATE

FILE LOG

ACTIVITY	REFERENCE	BY
Manager		
Design		CND
Draw		
Draw		
Draw		KA
Check		CND

REGISTRATION

JOB No 52010300

CONSTRUCTION PACKAGE

ISSUED FOR CONSTRUCTION (FINAL) APRIL 8, 2003

MECHANICAL DETAILS

M5.01

© Leo A Daly Company 2003

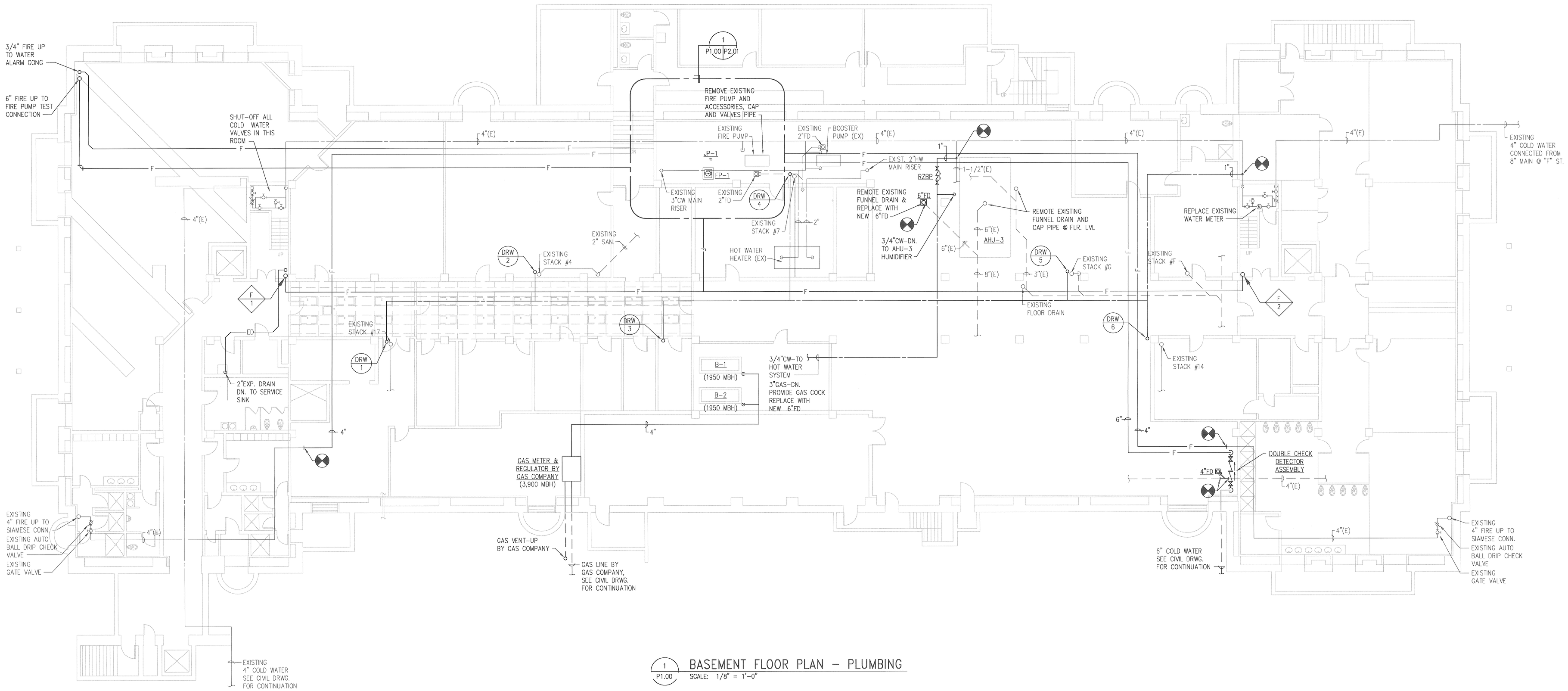

1 / P1.00 BASEMENT FLOOR PLAN – PLUMBING

SCALE: 1/8" = 1'-0"

Interior Improvements to DC Superior Courts Building 'B'

409 E Street, NW
Washington, DC 20001

U.S. General Services Administration
301 7th Street, SW, Room 2021
Washington, DC 20407

LEO A DALY
PLANNING ARCHITECTURE ENGINEERING INTERIORS
EST. 1915

1201 Connecticut Ave, NW
Washington DC 20036 USA
Tel 202-861-4600 Fax 202-872-8530

Dalco
10005 Old Columbia Road Suite L261
Columbia, MD 21046
Tel: 410-290-8827
Fax: 410-290-8812

Contractor
Address

KEY PLAN

ISSUES / REVISIONS

NO.	DESCRIPTION	DATE

FILE LOG

ACTIVITY	REFERENCE	BY
Manager		
Design		
Draw		
Draw		
Draw		
Check		

REGISTRATION

JOB No 52010300

CONSTRUCTION PACKAGE

ISSUED FOR CONSTRUCTION (FINAL) APRIL 8, 2003

BASEMENT FLOOR PLAN PLUMBING

P1.00

© Leo A Daly Company 2003

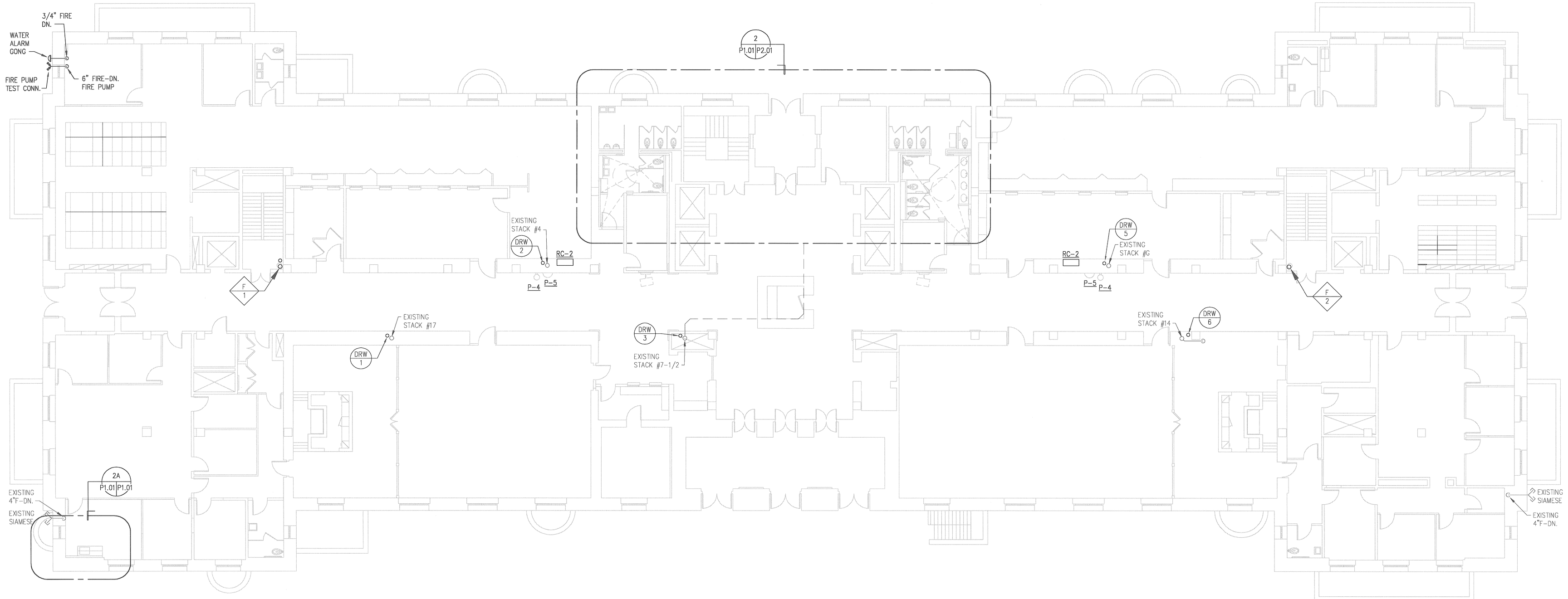

1 / P1.01 FIRST FLOOR PLAN – PLUMBING
SCALE: 1/8" = 1'-0"

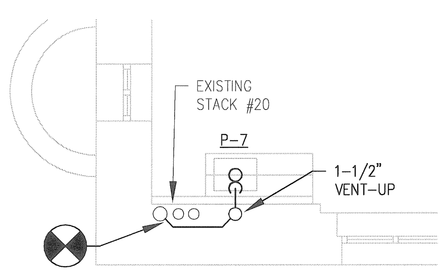

2A / P1.01 P1.01 PART PLAN – FIRST FLOOR
SCALE: 1/4" = 1'-0"

Interior Improvements to DC Superior Courts Building 'B'

409 E Street, NW
Washington, DC 20001

U.S. General Services Administration
301 7th Street, SW, Room 2021
Washington, DC 20407

LEO A DALY
PLANNING ARCHITECTURE ENGINEERING INTERIORS
EST. 1915

1201 Connecticut Ave, NW
Washington DC 20036 USA
Tel 202-861-4600 Fax 202-872-8530

Dalco
10005 Old Columbia Road Suite L261
Columbia, MD 21046
Tel: 410-290-8827
Fax: 410-290-8812

Contractor
Address

KEY PLAN

ISSUES / REVISIONS

NO.	DESCRIPTION	DATE

FILE LOG

ACTIVITY	REFERENCE	BY
Manager		
Design		
Draw		
Draw		
Draw		
Check		

REGISTRATION

JOB No 52010300

CONSTRUCTION PACKAGE

ISSUED FOR CONSTRUCTION (FINAL) APRIL 8, 2003

FIRST FLOOR PLAN PLUMBING

P1.01

© Leo A Daly Company 2003

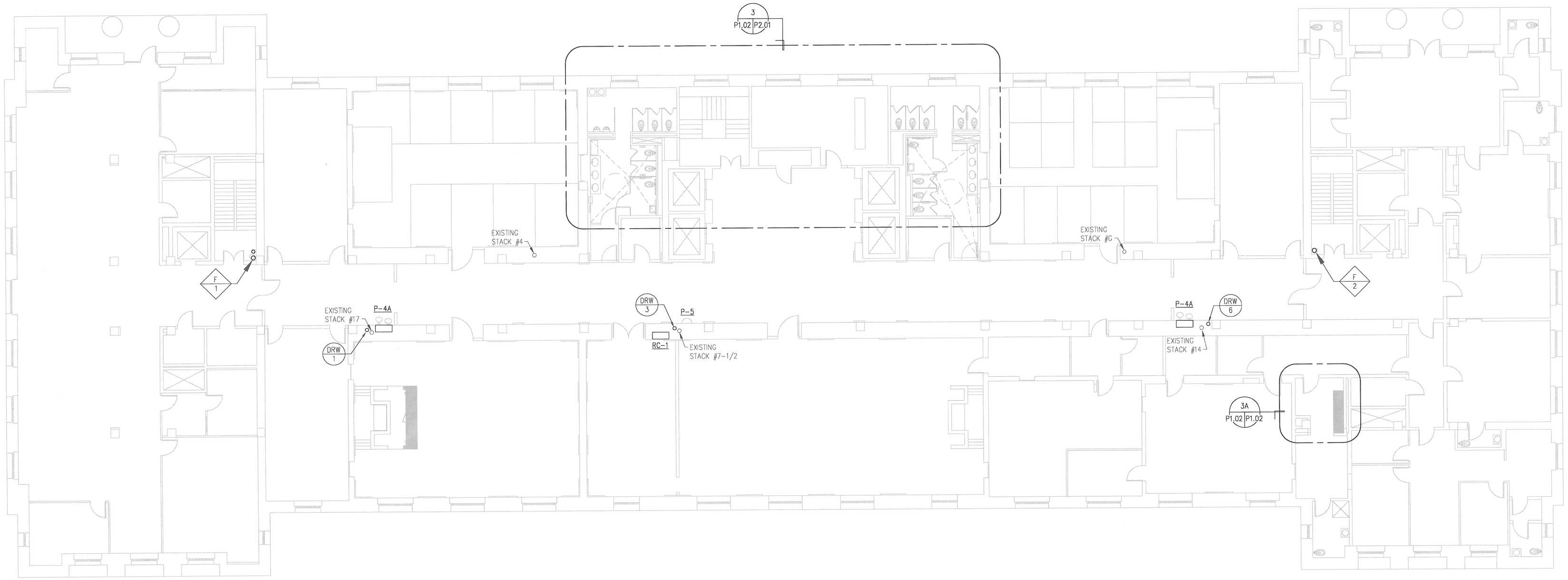

1 / P1.02 SECOND FLOOR PLAN – PLUMBING
SCALE: 1/8" = 1'-0"

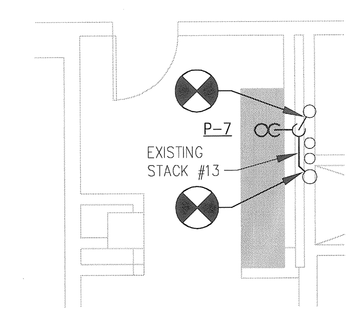

3A / P1.02 P1.02 PART PLAN – SECOND FLOOR
SCALE: 1/4" = 1'-0"

Interior Improvements to
DC Superior Courts
Building 'B'

409 E Street, NW
Washington, DC 20001

U.S. General Services Administration
301 7th Street, SW, Room 2021
Washington, DC 20407

LEO A DALY
PLANNING ARCHITECTURE ENGINEERING INTERIORS
EST. 1915

1201 Connecticut Ave, NW
Washington DC 20036 USA
Tel 202-861-4600 Fax 202-872-8530

Dalco Incorporated
10005 Old Columbia Road Suite L261
Columbia, MD 21046
Tel: 410-290-8827
Fax: 410-290-8812

Contractor
Address

KEY PLAN

ISSUES / REVISIONS

NO.	DESCRIPTION	DATE

FILE LOG

ACTIVITY	REFERENCE	BY
Manager		
Design		
Draw		
Draw		
Draw		
Check		

REGISTRATION

JOB No 52010300

CONSTRUCTION PACKAGE

ISSUED FOR CONSTRUCTION
(FINAL) APRIL 8, 2003

SECOND FLOOR PLAN
PLUMBING

P1.02

© Leo A Daly Company 2003

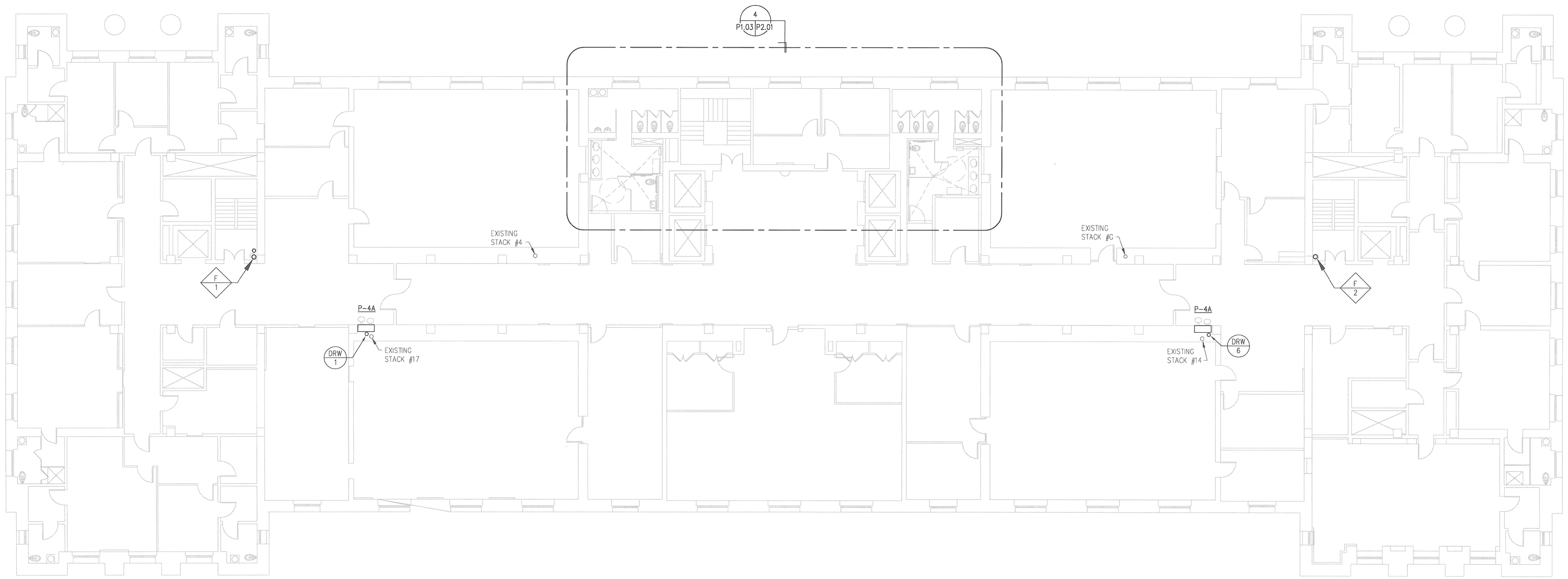

1 / P1.03 THIRD FLOOR PLAN – PLUMBING
SCALE: 1/8" = 1'-0"

Interior Improvements to DC Superior Courts Building 'B'

409 E Street, NW
Washington, DC 20001

U.S. General Services Administration
301 7th Street, SW, Room 2021
Washington, DC 20407

LEO A DALY
PLANNING ARCHITECTURE ENGINEERING INTERIORS
EST. 1915
1201 Connecticut Ave, NW
Washington DC 20036 USA
Tel 202-861-4600 Fax 202-872-8530

Dalco
10005 Old Columbia Road Suite L261
Columbia, MD 21046
Tel: 410-290-8827
Fax: 410-290-8812

Contractor
Address

KEY PLAN

ISSUES / REVISIONS

NO.	DESCRIPTION	DATE

FILE LOG

ACTIVITY	REFERENCE	BY
Manager		
Design		
Draw		
Draw		
Draw		
Check		

REGISTRATION

JOB No 52010300

CONSTRUCTION PACKAGE

ISSUED FOR CONSTRUCTION (FINAL) APRIL 8, 2003

THIRD FLOOR PLAN PLUMBING

P1.03

© Leo A Daly Company 2003

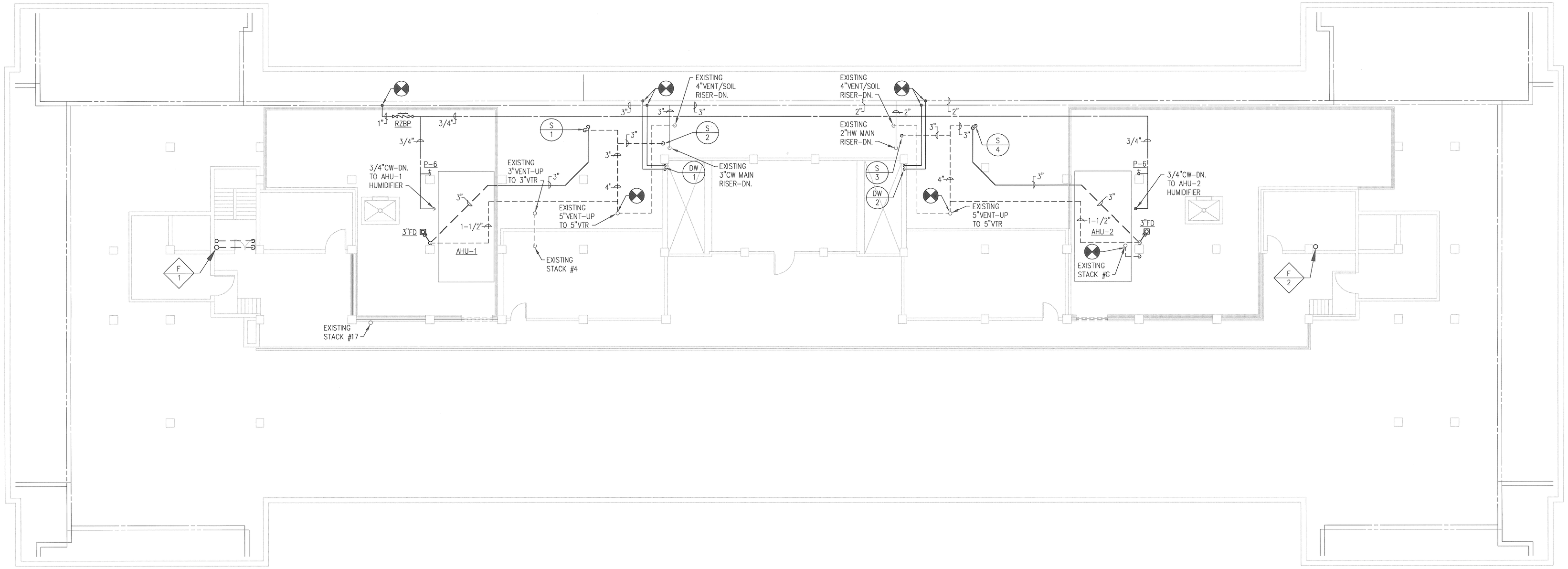

1 / P1.04 ATTIC FLOOR PLAN – PLUMBING

SCALE: 1/8" = 1'-0"

NORTH

Interior Improvements to DC Superior Courts Building 'B'

409 E Street, NW
Washington, DC 20001

U.S. General Services Administration
301 7th Street, SW, Room 2021
Washington, DC 20407

LEO A DALY
PLANNING ARCHITECTURE ENGINEERING DESIGNING
EST. 1915

1201 Connecticut Ave, NW
Washington DC 20036 USA
Tel 202-861-4600 Fax 202-872-8530

Dalco INCORPORATED

10005 Old Columbia Road Suite L261
Columbia, MD 21046
Tel: 410-290-8827
Fax: 410-290-8812

Contractor
Address

KEY PLAN

ISSUES / REVISIONS

NO.	DESCRIPTION	DATE

FILE LOG

ACTIVITY	REFERENCE	BY
Manager		
Design		
Draw		
Draw		
Draw		
Check		

REGISTRATION

JOB No 52010300

CONSTRUCTION PACKAGE

ISSUED FOR CONSTRUCTION (FINAL) APRIL 8, 2003

ATTIC FLOOR PLAN PLUMBING

P1.04

© Leo A Daly Company 2003

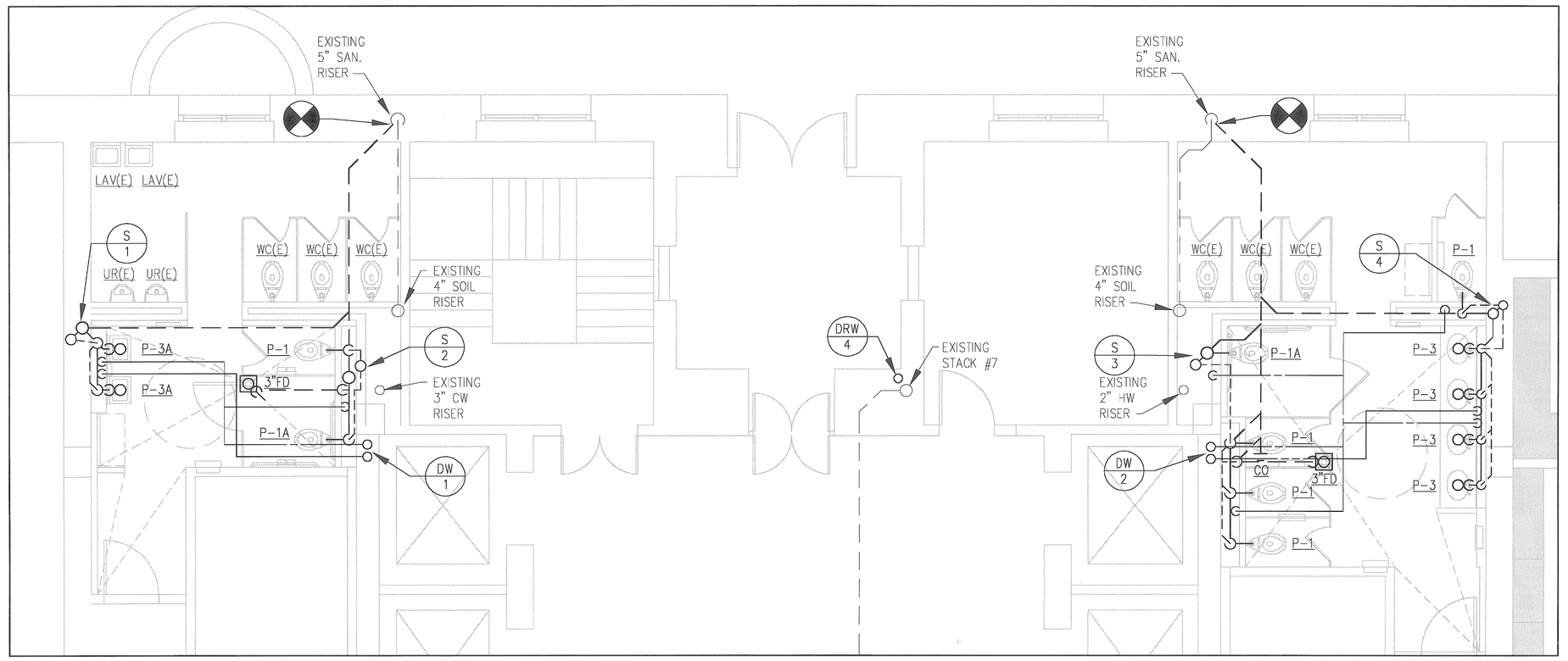

2 P2.01 P1.01 PART PLAN – FIRST FLOOR
SCALE: 1/4" = 1'-0"

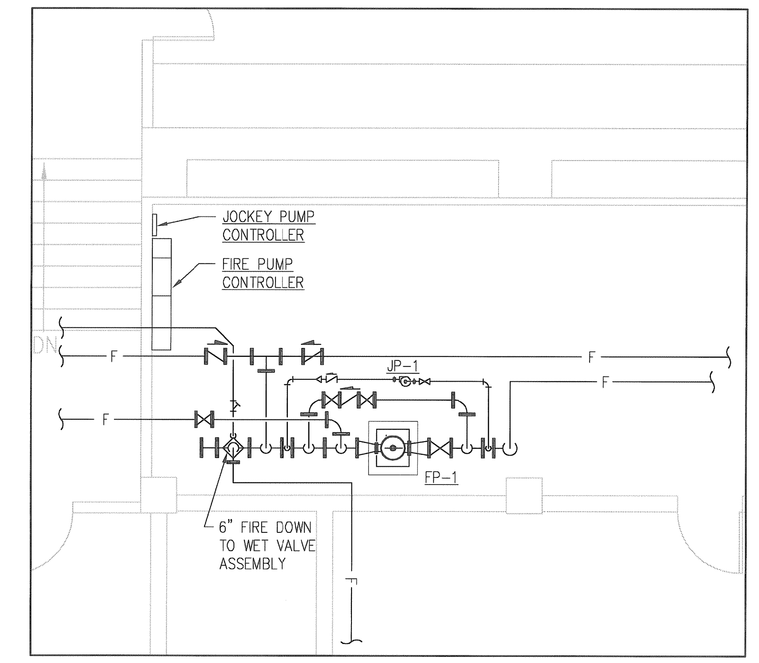

1 P2.01 P1.00 PART PLAN – BASEMENT
SCALE: 1/4" = 1'-0"

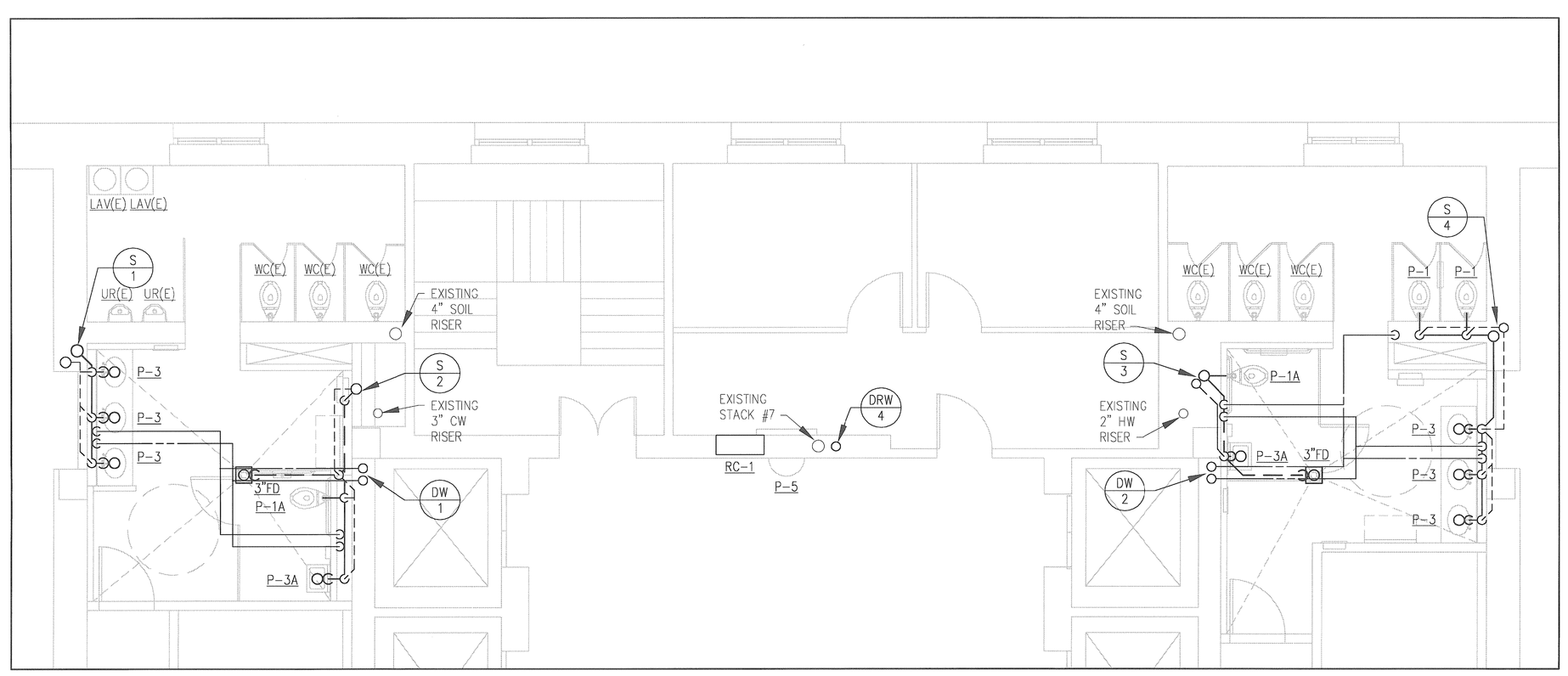

4 P2.01 P1.03 PART PLAN – THIRD FLOOR
SCALE: 1/4" = 1'-0"

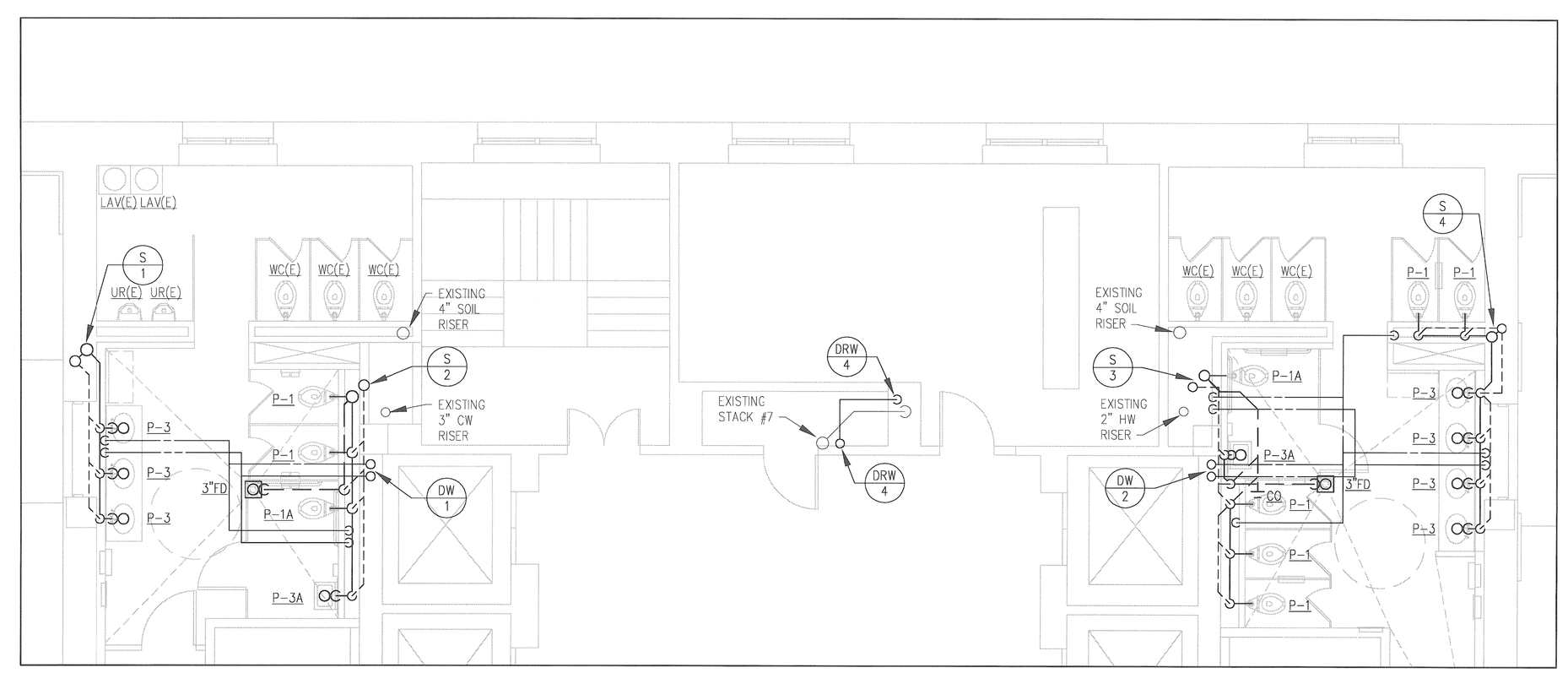

3 P2.01 P1.02 PART PLAN – SECOND FLOOR
SCALE: 1/4" = 1'-0"

Interior Improvements to DC Superior Courts Building 'B'

409 E Street, NW
Washington, DC 20001

U.S. General Services Administration
301 7th Street, SW, Room 2021
Washington, DC 20407

LEO A DALY
PLANNING ARCHITECTURE ENGINEERING INTERIORS
EST. 1915
1201 Connecticut Ave, NW
Washington DC 20036 USA
Tel 202-861-4600 Fax 202-872-8530

Dalco Incorporated
10005 Old Columbia Road Suite L261
Columbia, MD 21046
Tel: 410-290-8827
Fax: 410-290-8812

Contractor
Address

KEY PLAN

ISSUES / REVISIONS

NO.	DESCRIPTION	DATE

FILE LOG

ACTIVITY	REFERENCE	BY
Manager		
Design		
Draw		
Draw		
Draw		
Check		

REGISTRATION

JOB No 52010300

CONSTRUCTION PACKAGE

ISSUED FOR CONSTRUCTION (FINAL) APRIL 8, 2003

PART PLANS
PLUMBING

P2.01

© Leo A Daly Company 2003

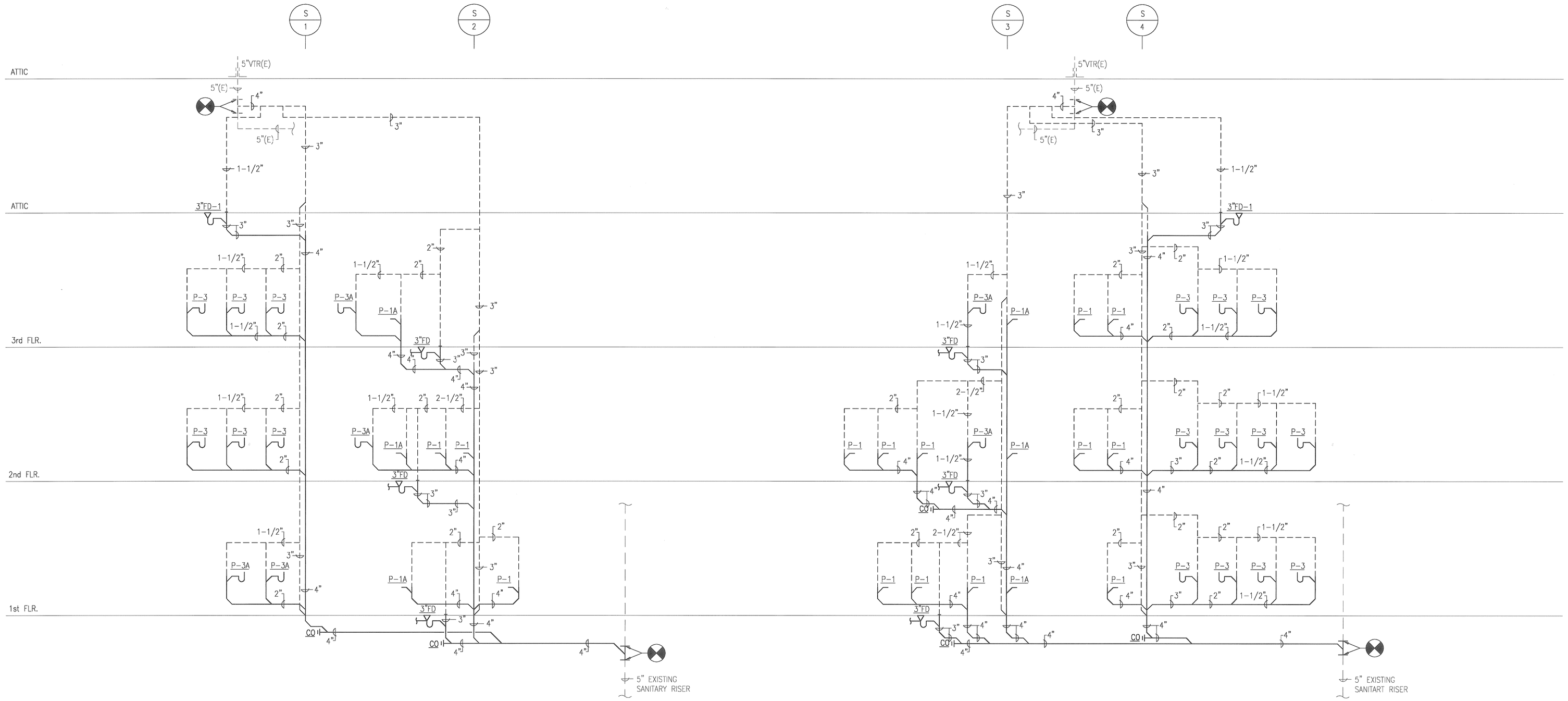

1 P3.01 SANITARY RISER DIAGRAMS
NOT TO SCALE

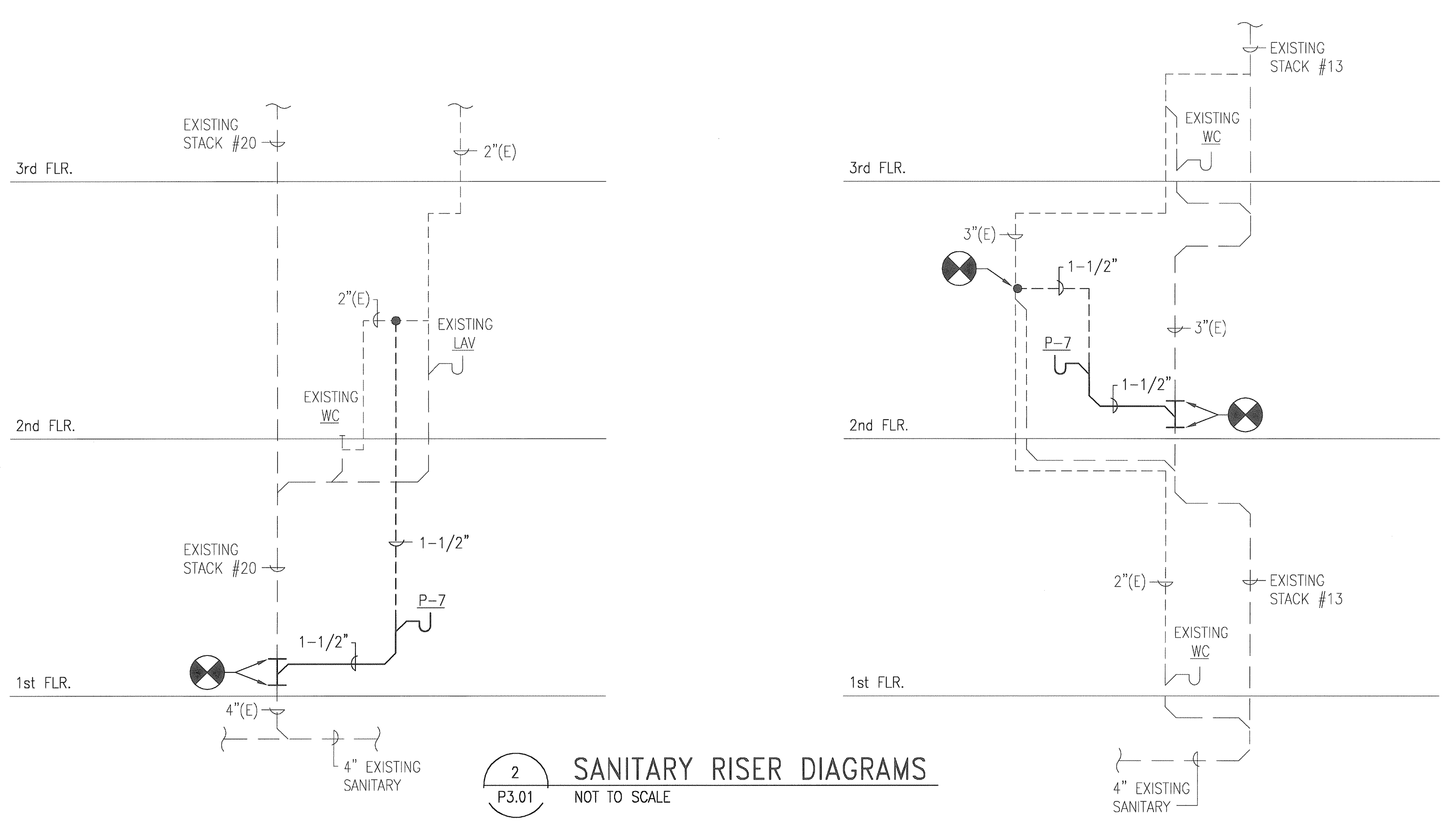

2 P3.01 SANITARY RISER DIAGRAMS
NOT TO SCALE

Interior Improvements to DC Superior Courts Building 'B'

409 E Street, NW
Washington, DC 20001

U.S. General Services Administration
301 7th Street, SW, Room 2021
Washington, DC 20407

LEO A DALY
PLANNING ARCHITECTURE ENGINEERING INTERIORS
EST. 1915
1201 Connecticut Ave, NW
Washington DC 20036 USA
Tel 202-861-4600 Fax 202-872-8530

Dalco INCORPORATED
10005 Old Columbia Road Suite L261
Columbia, MD 21046
Tel: 410-290-8827
Fax: 410-290-8812

Contractor
Address

KEY PLAN

ISSUES / REVISIONS

NO.	DESCRIPTION	DATE

FILE LOG

ACTIVITY	REFERENCE	BY
Manager		
Design		
Draw		
Draw		
Draw		
Check		

REGISTRATION

JOB No 52010300

CONSTRUCTION PACKAGE

ISSUED FOR CONSTRUCTION (FINAL) APRIL 8, 2003

SANITARY RISER DIAGRAMS

P3.01

© Leo A Daly Company 2003

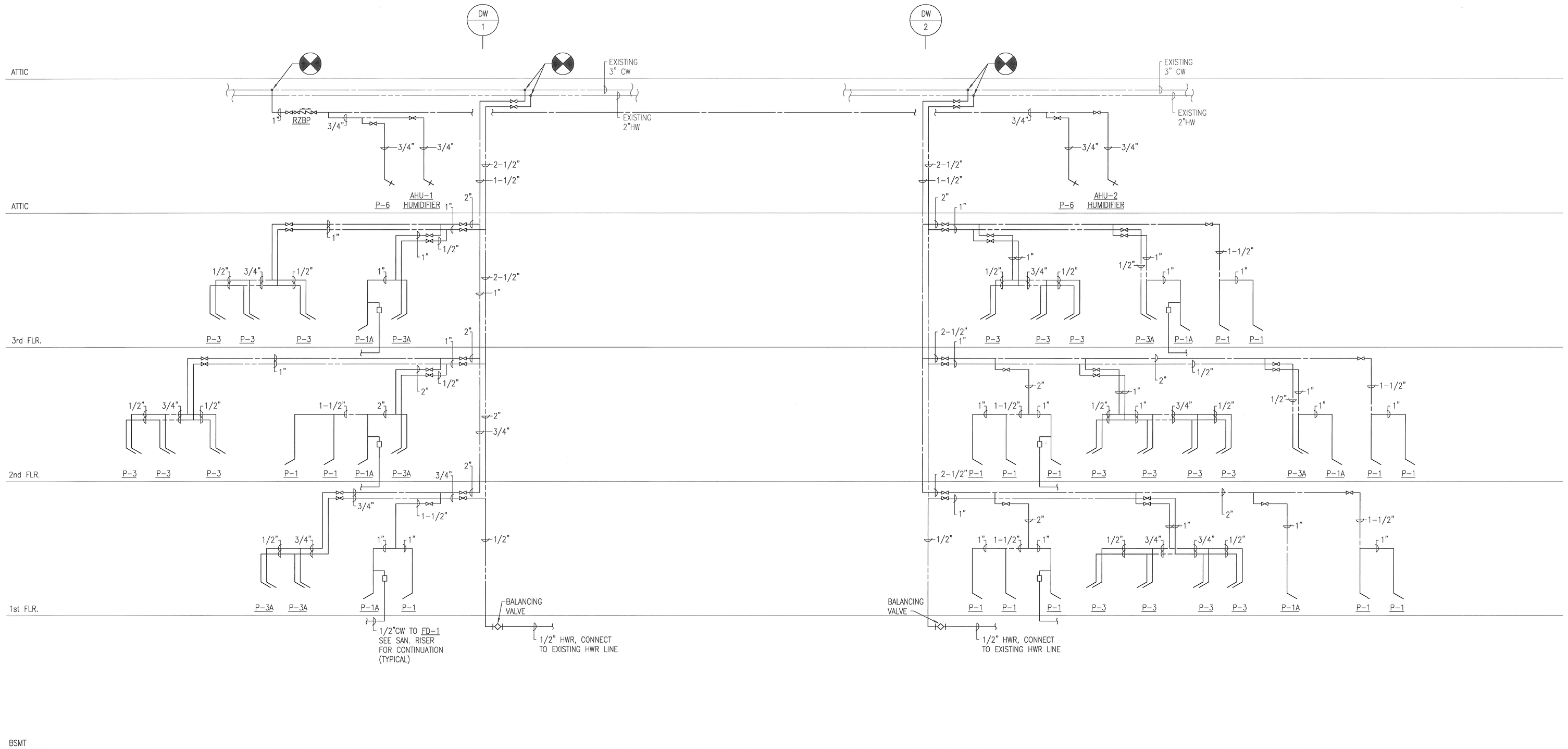

1 P3.02 DOMESTIC WATER RISER DIAGRAMS
NOT TO SCALE

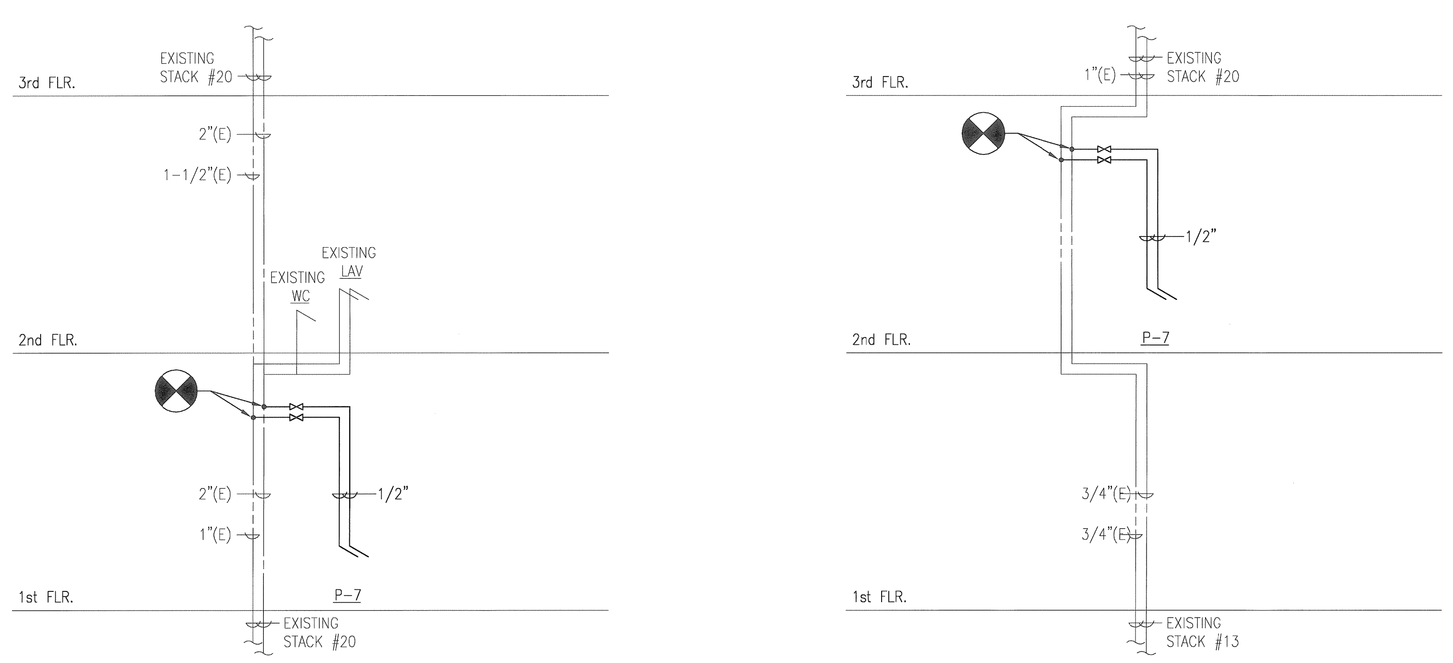

2 P3.02 DOMESTIC WATER RISER DIAGRAMS
NOT TO SCALE

Interior Improvements to DC Superior Courts Building 'B'

409 E Street, NW
Washington, DC 20001

U.S. General Services Administration
301 7th Street, SW, Room 2021
Washington, DC 20407

LEO A DALY
PLANNING ARCHITECTURE ENGINEERING INTERIORS
EST. 1915
1201 Connecticut Ave, NW
Washington DC 20036 USA
Tel 202-861-4600 Fax 202-872-8530

Dalco INCORPORATED
10005 Old Columbia Road Suite L261
Columbia, MD 21046
Tel: 410-290-8827
Fax: 410-290-8812

Contractor
Address

KEY PLAN

ISSUES / REVISIONS

NO.	DESCRIPTION	DATE

FILE LOG

ACTIVITY	REFERENCE	BY
Manager		
Design		
Draw		
Draw		
Draw		
Check		

REGISTRATION

JOB No 52010300

CONSTRUCTION PACKAGE

ISSUED FOR CONSTRUCTION (FINAL) APRIL 8, 2003

DOMESTIC WATER RISER DIAGRAMS

P3.02

© Leo A Daly Company 2003

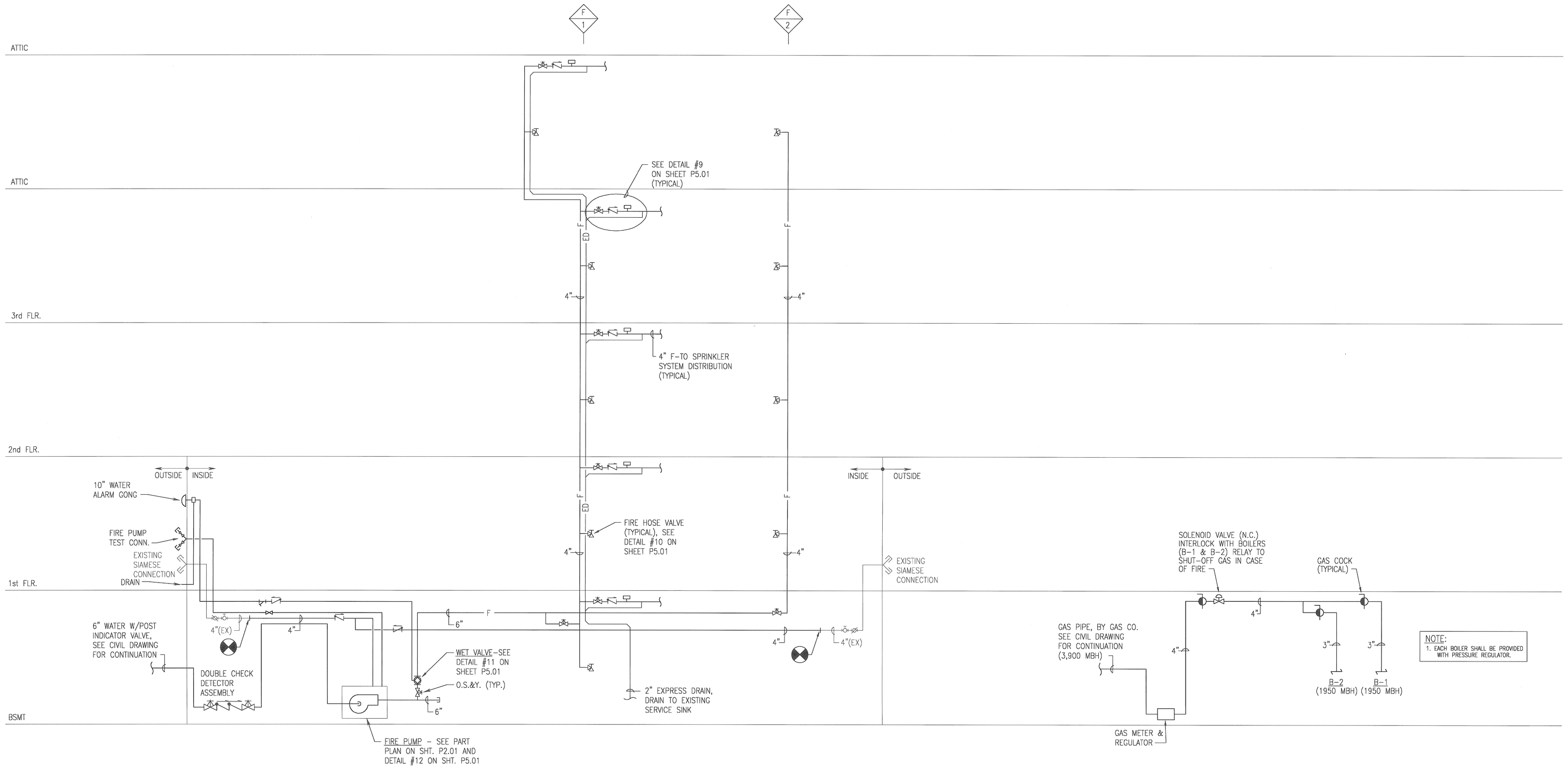

1 / P3.03 FIRE PROTECTION RISER DIAGRAMS
NOT TO SCALE

NOTE:
1. EACH BOILER SHALL BE PROVIDED WITH PRESSURE REGULATOR.

2 / P3.03 GAS RISER DIAGRAMS
NOT TO SCALE

Interior Improvements to DC Superior Courts Building 'B'

409 E Street, NW
Washington, DC 20001

U.S. General Services Administration
301 7th Street, SW, Room 2021
Washington, DC 20407

LEO A DALY
PLANNING ARCHITECTURE ENGINEERING INTERIORS
EST. 1915

1201 Connecticut Ave, NW
Washington DC 20036 USA
Tel 202-861-4600 Fax 202-872-8530

Dalco INCORPORATED
10005 Old Columbia Road Suite L261
Columbia, MD 21046
Tel: 410-290-8827
Fax: 410-290-8812

Contractor
Address

KEY PLAN

ISSUES / REVISIONS

NO.	DESCRIPTION	DATE

FILE LOG

ACTIVITY	REFERENCE	BY
Manager		
Design		
Draw		
Draw		
Draw		
Check		

REGISTRATION

JOB No 52010300

CONSTRUCTION PACKAGE

ISSUED FOR CONSTRUCTION (FINAL) APRIL 8, 2003

FIRE PROTECTION AND GAS RISER DIAGRAMS

P3.03

© Leo A Daly Company 2003

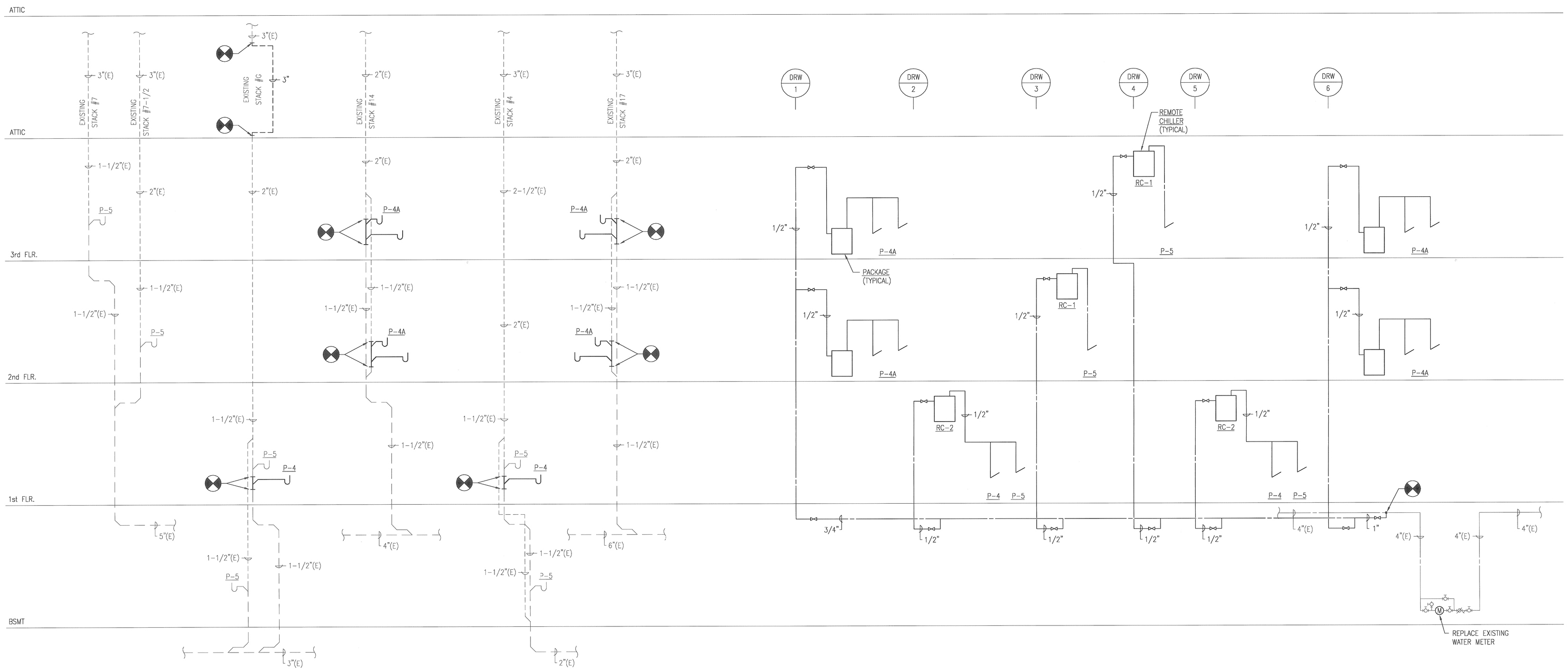

1 P3.04 SANITARY RISER DIAGRAMS
NOT TO SCALE

2 P3.04 DRINKING WATER RISER DIAGRAMS
NOT TO SCALE

Interior Improvements to DC Superior Courts Building 'B'

409 E Street, NW
Washington, DC 20001

U.S. General Services Administration
301 7th Street, SW, Room 2021
Washington, DC 20407

LEO A DALY
1201 Connecticut Ave, NW
Washington DC 20036 USA
Tel 202-861-4600 Fax 202-872-8530

Dalco
10005 Old Columbia Road Suite L261
Columbia, MD 21046
Tel: 410-290-8827
Fax: 410-290-8812

Contractor
Address

KEY PLAN

ISSUES / REVISIONS

NO.	DESCRIPTION	DATE

FILE LOG

ACTIVITY	REFERENCE	BY
Manager		
Design		
Draw		
Draw		
Draw		
Check		

REGISTRATION

JOB No 52010300

CONSTRUCTION PACKAGE

ISSUED FOR CONSTRUCTION (FINAL) APRIL 8, 2003

DRINKING WATER - SANITARY AND WATER RISER DIAGRAMS

P3.04

© Leo A Daly Company 2003

PLUMBING FIXTURES SCHEDULE

MARK	TYPE OF FIXTURE	PIPE SIZES (INCHES)				REMARKS
		W	V	CW	HW	
P-1	WATER CLOSET	4	2	1	---	WH, FV
P-1A	WATER CLOSET	4	2	1	---	WH, FV, HP
P-2	NOT USE	---	---	---	---	---
P-3	LAVATORY	1-1/2	1-1/2	1/2	1/2	CT
P-3A	LAVATORY	1-1/2	1-1/2	1/2	1/2	WH
P-4	DRINKING FOUNTAIN	1-1/2	1-1/2	1/2	---	WH, HP, CONNECT TO REMOTE CHILLER
P-4A	ELECT. WATER COOLER (COMB.)	1-1/2	1-1/2	1/2	---	WH, PACKAGE
P-5	DRINKING FOUNTAIN	1-1/2	1-1/2	1/2	---	EXIST., CONNECT TO REMOTE CHILLER
P-6	HOSE BIBB	---	---	1/2	---	W/ANTI-SIPHON VACUUM BREAKER
P-7	PANTRY SINK	1-1/2	1-1/2	1/2	1/2	CT, SS

NOTES:

1. FV - FLUSH VALVE WH - WALL HUNG HP - HANDICAPPED
   CT - COUNTER TOP FT - FLUSH TANK SS - STAINLESS STEEL
2. REMOTE CHILLER (RC-1) SHALL BE HALSEY TAYLOR MODEL SJ5 (1/5HP, 4.5 AMPS, 120/1/60).
2. REMOTE CHILLER (RC-2) SHALL BE HALSEY TAYLOR MODEL SJ8 (1/5HP, 4.5 AMPS, 120/1/60).
3. ELECT. WATER COOLER (COMB.) SHALL BE HALSEY TAYLOR MODEL OVL-II SER-Q (1/5HP, 4.5 AMPS, 120/1/60).

WATER HAMMER ARRESTOR SCHEDULE

P.D.I. SYMBOLS	A	B	C	D	E	F	REMARKS (PROTOTYPE)
FIXTURE UNIT	1 - 11	12 - 32	33 - 60	61 - 113	114 - 154	155 - 330	

PUMP SCHEDULE

MARK	SYSTEM	CAPACITY GPM	PSI	HEAD	MOTOR		ELEC. DATA	REMARKS (PROTOTYPE)
					HP	RPM		
FP-1	FIRE PROTECTION	500	80	185	50	3500	208/3/60	AURORA MODEL 4-383-9C
JP-1	FIRE PROTECTION	4	86	200	1/3	3500	208/3/60	MTH MODEL T41D-1/3

NOTES:

1. CONTROLLER SHALL BE BY JOSLYN CLARK ACROSS-THE-LINE FIRE PUMP CONTROLLER, 42,000 AMPS RMS.
2. JOCKEY PUMP CONTROLLER SHALL BE BY JOSLYN CLARK JS JOCKEY PUMP CONTROLLER WITH POWER FUSES.

Interior Improvements to DC Superior Courts Building 'B'

409 E Street, NW
Washington, DC 20001

U.S. General Services Administration
301 7th Street, SW, Room 2021
Washington, DC 20407

LEO A DALY
PLANNING ARCHITECTURE ENGINEERING INTERIORS
EST. 1915

1201 Connecticut Ave, NW
Washington DC 20036 USA
Tel 202-861-4600 Fax 202-872-8530

Dalco INCORPORATED
10005 Old Columbia Road Suite L261
Columbia, MD 21046
Tel: 410-290-8827
Fax: 410-290-8812

Contractor
Address

KEY PLAN

ISSUES / REVISIONS

NO.	DESCRIPTION	DATE

FILE LOG

ACTIVITY	REFERENCE	BY
Manager		
Design		
Draw		
Draw		
Draw		
Check		

REGISTRATION

JOB No 52010300

CONSTRUCTION PACKAGE

ISSUED FOR CONSTRUCTION (FINAL) APRIL 8, 2003

PLUMBING SCHEDULES

P4.01

© Leo A Daly Company 2003

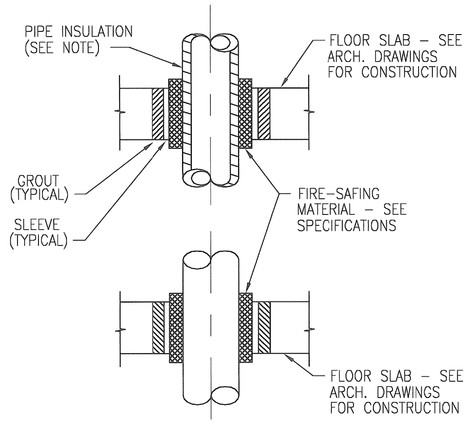

NOTE: FOR PENETRATION THROUGH WATER-PROOF FLOORS, OMIT PIPE INSULATION WHERE SEALANT OCCURS. SEE SPECS. PROVIDE ESCUTCHEON PLATE FOR UNCONCEALED PIPING.

1 / P5.01 PIPE PENETRATION THRU FLOOR DETAIL
NOT TO SCALE

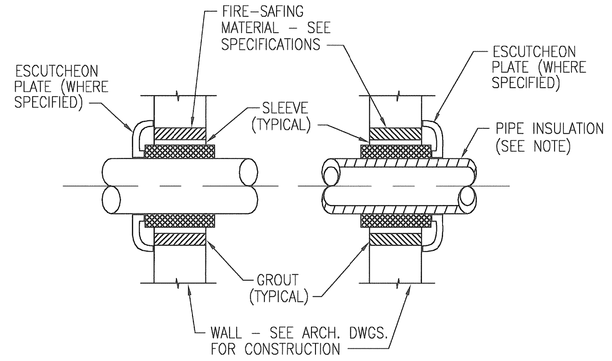

NOTE: FOR PENETRATION THROUGH WATER-PROOF WALLS & PARTITIONS, OMIT INSULATION WHERE SEALANT OCCURS. SEE SPECS. PROVIDE ESCUTHEON PLATE FOR UNCONCEALED PIPING.

2 / P5.01 PIPE PENETRATION THRU WALL DETAIL
NOT TO SCALE

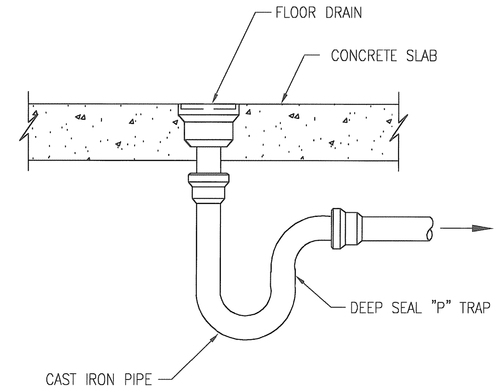

3 / P5.01 FLOOR DRAIN DETAIL
NOT TO SCALE

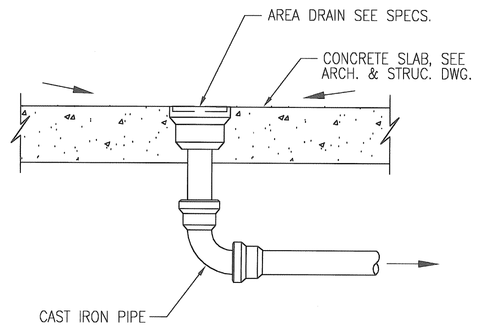

4 / P5.01 AREA DRAIN DETAIL
NOT TO SCALE

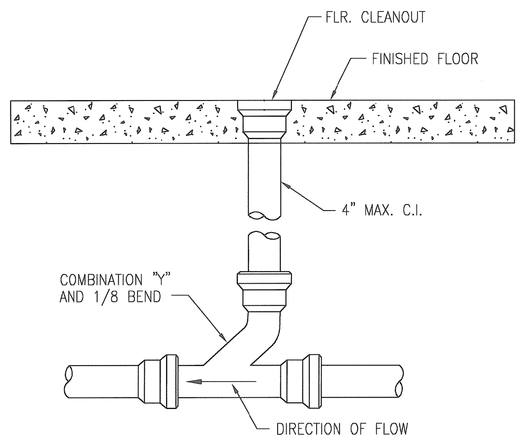

INTERIOR

5 / P5.01 FLOOR CLEANOUT DETAIL
NOT TO SCALE

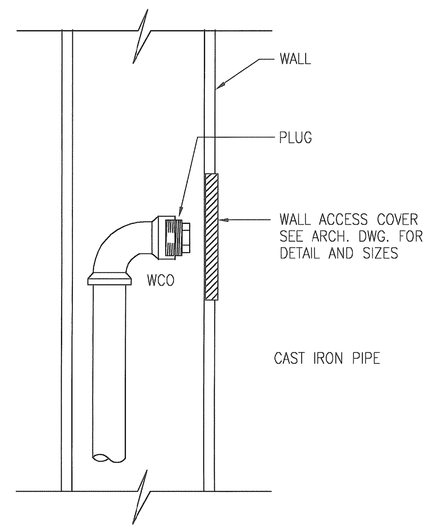

6 / P5.01 WALL CLEANOUT DETAIL
NOT TO SCALE

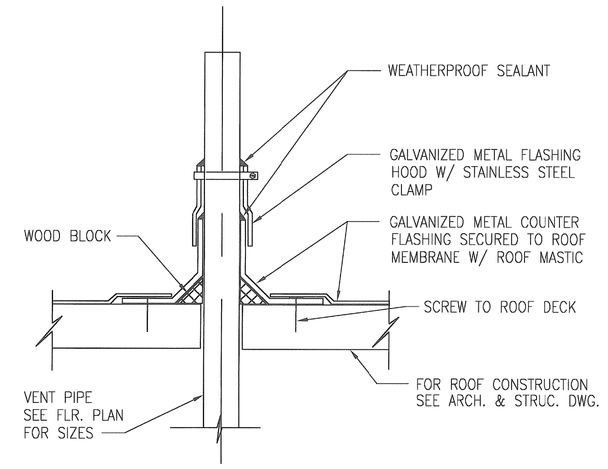

7 / P5.01 VENT THRU ROOF DETAIL
NOT TO SCALE

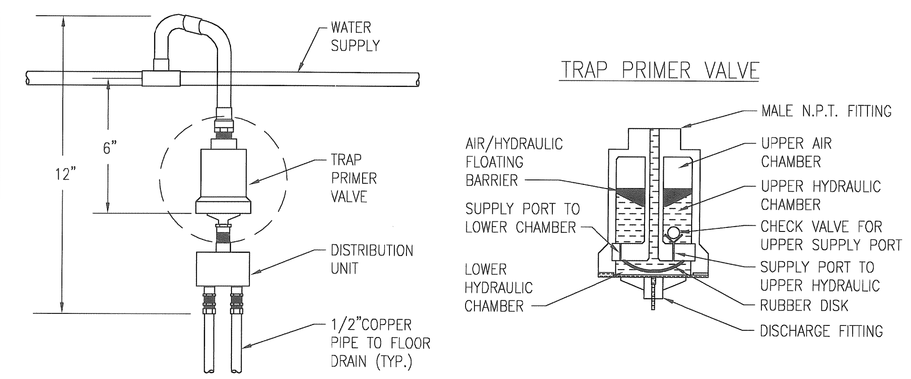

8 / P5.01 TRAP PIMER VALVE DETAIL
NOT TO SCALE

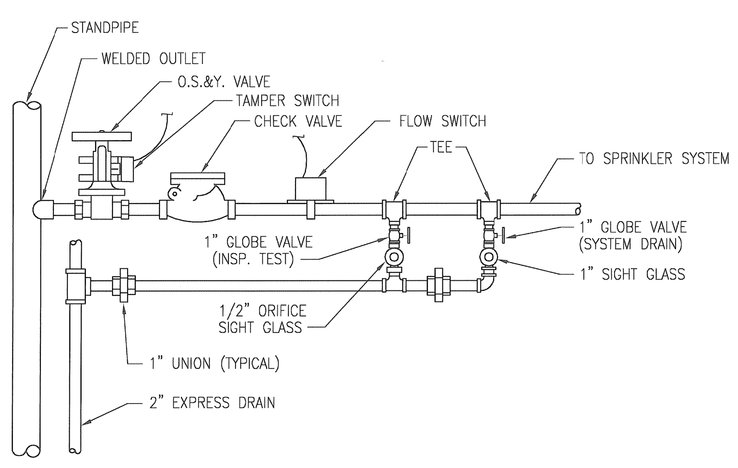

9 / P5.01 SPRINKLER CONNECTION DETAIL
NOT TO SCALE

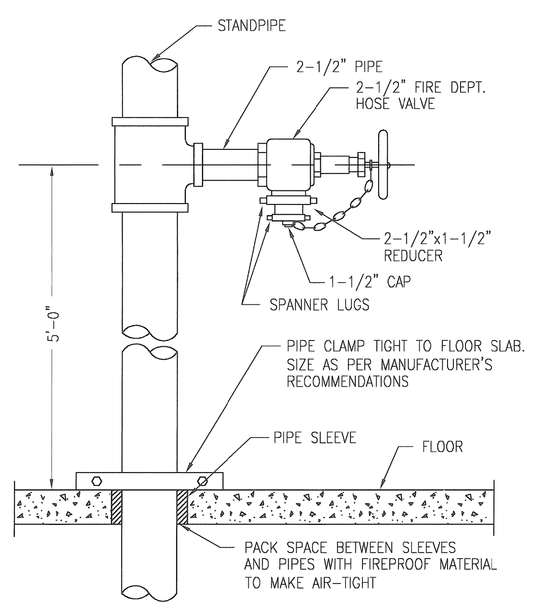

10 / P5.01 STANDPIPE FIRE HOSE VALVE DETAIL
NOT TO SCALE

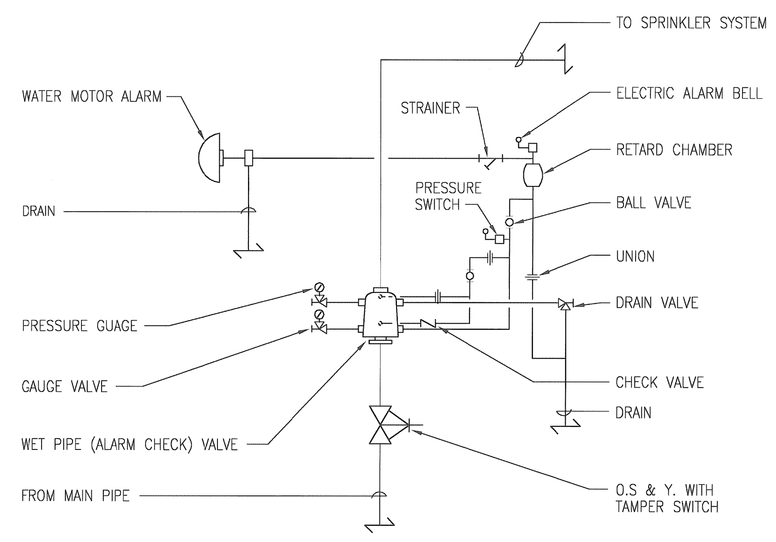

11 / P5.01 WET VALVE SYSTEM DETAIL
NOT TO SCALE

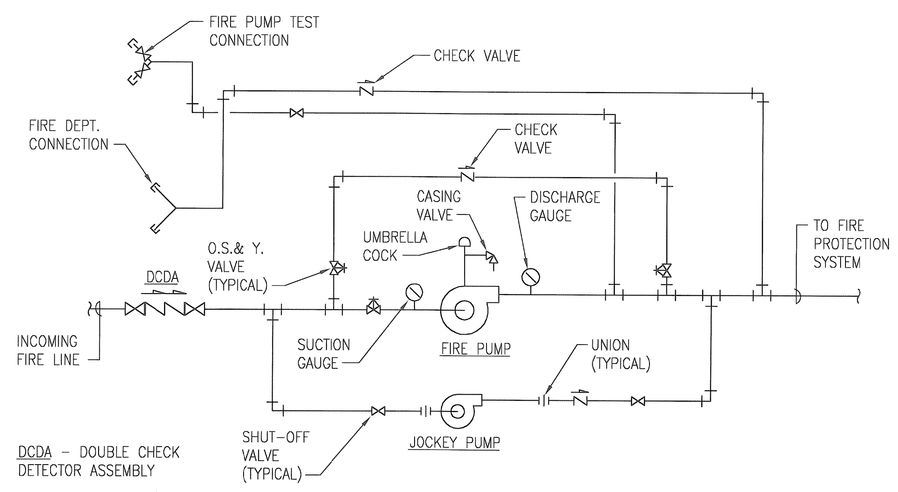

NOTES:

1. ALL O.S. & Y. VALVES SHALL BE PROVIDED WITH TAMPER SWITCHES.
2. MAIN RELIEF VALVE TO BE PROVIDED AND SHALL BE SET BY CONTRACTOR DURING START UP AND TESTING. PRESSURE ON THE SYSTEM NOT TO EXCEED 175 PSI. PUMP REPRESENTATIVE TO ASSIST IN SETTING THE RELIEF VALVE.

12 / P5.01 FIRE PUMP DETAIL
NOT TO SCALE

Interior Improvements to DC Superior Courts Building 'B'

409 E Street, NW
Washington, DC 20001

U.S. General Services Administration
301 7th Street, SW, Room 2021
Washington, DC 20407

LEO A DALY
PLANNING ARCHITECTURE ENGINEERING INTERIORS
EST. 1915

1201 Connecticut Ave, NW
Washington DC 20036 USA
Tel 202-861-4600 Fax 202-872-8530

Dalco
10005 Old Columbia Road Suite L261
Columbia, MD 21046
Tel: 410-290-8827
Fax: 410-290-8812

Contractor
Address

KEY PLAN

ISSUES / REVISIONS

NO.	DESCRIPTION	DATE

FILE LOG

ACTIVITY	REFERENCE	BY
Manager		
Design		
Draw		
Draw		
Draw		
Check		

REGISTRATION

JOB No 52010300

CONSTRUCTION PACKAGE

ISSUED FOR CONSTRUCTION (FINAL) APRIL 8, 2003

PLUMBING DETAILS

P5.01

© Leo A Daly Company 2003

ELECTRICAL NOTES:

GENERAL AND POWER:

1 – ALL WORK SHALL BE ACCOMPLISHED IN ACCORDANCE WITH THE NATIONAL ELECTRICAL CODE, NFPA AND ALL OTHER LOCAL CODES.

2 – ALL WORK SHALL BE ACCOMPLISHED WITHIN THE INTENT OF THE BASE BUILDING CONSTRUCTION DOCUMENTS AND SPECIFICATIONS, AS APPLICABLE.

5 – ELECTRICAL CONTRACTOR IS RESPONSIBLE TO COORDINATE WITH ALL OTHER TRADES.

6 – CONTRACTOR SHALL VERIFY ALL EQUIPMENT REQUIREMENTS BEFORE INSTALLING CONDUIT OR CONDUCTORS FROM POWER SOURCE TO EQUIPMENT TERMINATION.

7 – EXACT LOCATION, MOUNTING HEIGHT, AND TYPE OF TERMINATION FROM JUNCTION BOXES, STUB–UPS, DISCONNECT SWITCHES, ETC., SHALL BE DETERMINED FROM ARCHITECTURAL DRAWINGS, SHOP DRAWINGS, EQUIPMENT CUTS, OR DETAILS BEFORE CONDUIT ROUGH IN.

8 – CONTRACTOR SHALL PROVIDE AND INSTALL MINIMUM #12 AWG WIRE SIZE AND 3/4" CONDUIT FOR ALL BRANCH CIRCUITRY.

9 – CONTRACTOR SHALL COORDINATE WITH ARCHITECTS COLOR OF DEVICES AND COVER PLATES.

10 – CONTRACTOR SHALL PROVIDE AND INSTALL A SEPARATE NEUTRAL CONDUCTOR FOR EACH DIMMER AND GROUND FAULT INTERRUPTER RECEPTACLE.

11 – CONTRACTOR SHALL X–RAY SLAB IN AREA OF PENETRATION PRIOR TO CORE DRILLING AND COORDINATE WITH EQUIPMENT IN CEILING SPACE BELOW TO CHECK FOR OBSTRUCTIONS.

12 – CONTRACTOR SHALL PROVIDE MINIMUM #10 AWG CONDUCTOR SIZE IN BRANCH CIRCUIT HOME RUNS OVER 75' AND #8 AWG RUNS OVER 150' IN LENGTH.

13 – ALL EMPTY RACEWAY FOR USE BY OTHER SHALL BE PROVIDED WITH NYLON PULL STRINGS.

14 – ALL RACEWAYS SHALL BE CONCEALED WHERE PRACTICAL. WHERE RACEWAYS CANNOT BE CONCEALED, IT SHALL BE INSTALLED AT THE ARCHITECT'S DIRECTION.

15 – ALL ELECTRICAL OUTLETS AND ACCESSORIES FURNISHED WITH EQUIPMENT AND/OR EXISTING EQUIPMENT REUSED AND RELOCATED SHALL BE CONNECTED AND ENERGIZED BY THE ELECTRICAL CONTRACTOR. THE CONTRACTOR SHALL ENSURE THAT EXISTING DEVICES REMAINING IN PLACE ARE RECONNECTED TO EXISTING CIRCUITS SERVING THOSE DEVICES.

16 – THE CONTRACTOR MUST ASSURE EQUIPMENT GROUNDING SYSTEM CONTINUITY AND SHALL BE CONTINUOUSLY IDENTIFIED THROUGHOUT THE SYSTEM TO AVOID ERROR.

17 – CONTRACTOR SHALL PROVIDE NEW TYPED PANEL DIRECTORIES FOR ALL PANELS AFFECTED BY THIS WORK.

18 – GROUNDING OF ALL CONDUIT, PANELBOARD, BOXES AND EQUIPMENT SHALL CONFORM TO LATEST APPLICABLE EDITION OF NATIONAL ELECTRICAL CODE. CONTINUITY OF METAL RACEWAYS SHALL BE INSURED BY THE USE OF DOUBLE LOCKNUTS. GROUND CONNECTORS SHALL BE OF PRESSURE TYPE SIMILAR AND EQUAL TO BURNDY OR O–Z.

19 – ALL CONDUCTORS SHALL BE COPPER WITH INSULATION RATED 75°C TYPE THHN, THWN, OR THW.

20 – CONTRACTOR SHALL DERATE CONDUCTORS PER NATIONAL ELECTRIC CODE IF MORE THAN THREE PHASE CONDUCTORS ARE INSTALLED IN A SINGLE CONDUIT.

21 – PROVIDE SINGLE COVERPLATE IN ALL AREAS WHERE DEVICES ARE GANGED – VERIFY WITH ARCHITECT.

22 – ALL WIRE AND/OR CABLE RUNNING ABOVE CEILING IN RETURN AIR PLENUMS SHALL BE UL LISTED FOR SUCH USE.

23 – ALL CONNECTORS AND/OR COUPLERS SHALL BE MALLEABLE STEEL. CAST FITTINGS ARE NOT ACCEPTABLE.

24 – FURNISH ALL LABOR, MATERIAL, SERVICES AND SKILLED SUPERVISION NECESSARY FOR THE CONSTRUCTION, ERECTION, INSTALLATIONS, CONNECTIONS, TESTING AND ADJUSTMENT OF ALL CIRCUIT AND ELECTRICAL EQUIPMENT SPECIFIED HEREIN, OR SHOWN OR NOTED ON THE DRAWINGS, AND ITS DELIVERY TO THE OWNER COMPLETE IN ALL RESPECTS READY FOR USE

25 – CONTRACTOR SHALL OBTAIN AND PAY FOR ALL PERMITS AND INSPECTIONS

26 – NOT USED.

27 – ALL CUTTING AND PATCHING SHALL BE PERFORMED IN A WORKMANLIKE MANNER ACCEPTABLE TO THE ARCHITECT/OWNER

28 – ALL ELECTRICAL WORK, INCLUDING SERVICE AND EQUIPMENT, SHALL BE CONDUCTED ON DE–ENERGIZED SYSTEMS AND COMPONENTS. WHERE CONTINUOUS SERVICE IS REQUIRED TO EXISTING EQUIPMENT, AN ALTERNATIVE MEANS OF SERVICE SHALL BE PROVIDED AND INSTALLED UNTIL THE REQUIRED NEW AND/OR ALTERED WORK HAS BEEN COMPLETED

29 – THE CONTRACTOR SHALL EXTEND AS REQUIRED ANY FEEDER OR BRANCH CIRCUIT SUPPORTING RELOCATED OR REPLACED MECHANICAL EQUIPMENT.

LIGHTING:

1 – ELECTRICAL CONTRACTOR SHALL REFER TO ARCHITECTURAL DRAWINGS FOR TYPE OF CEILING CONSTRUCTION IN ALL AREAS BEFORE ORDERING OR INSTALLING LIGHTING FIXTURES.

2 – CONTRACTOR TO NOTIFY ARCHITECT OF ANY LIGHTING LAYOUT INTERFERENCE WITH EXISTING STRUCTURAL MEMBERS AND/OR MECHANICAL EQUIPMENT TO OBTAIN FINAL APPROVAL PRIOR TO INSTALLATION.

3 – ALL LIGHT FIXTURES SHALL BE SUPPORTED FROM THE BUILDING STRUCTURE; DO NOT SUPPORT FROM SUSPENDED CEILING.

LEGEND:

AIC	AMPERES INTERRUPTION CAPACITY	EMT	ELECTRICAL METALLIC TUBING	MH	MOUNTING HEIGHT	UON	UNLESS OTHERWISE NOTED
AFF	ABOVE FINISHED FLOOR	E/R	EXISTING TO BE RELOCATED	MLO	MAIN LUGS ONLY	UL	UNDERWRITERS LABORATORIES
BFG	BELOW FINISHED GRADE	FA	FIRE ALARM SYSTEM	MTG	MOUNTING	V	VOLT
C	CONDUIT	GFP	GROUND FAULT PROTECTION	NFSS	NON–FUSIBLE SAFETY SWITCH	VA	VOLT AMPERES
CKT	CIRCUIT	HP	HORSE POWER	NEC	NATIONAL ELECTRIC CODE	WP	WEATHER PROOF
CB	CIRCUIT BREAKER	HH	HANDHOLE	NEMA	NATIONAL ELECTRICAL MANUFACTURERS ASSOCIATION	WHM	WATT HOUR METER
CT	CURRENT TRANSFORMER	JB	JUNCTION BOX	PNL	PANELBOARD	W	WATT
EC	EMPTY CONDUIT	KAIC	1000 AMPERE INTERRUPTING CAPACITY	PH	PHASE	XFMR	TRANSFORMER
E	EXISTING TO REMAIN	KVA	KILO VOLTS AMPERES	R	RELOCATED		
EF	EXHAUST FAN	MCC	MOTOR CONTROL CENTER	TYP	TYPICAL		
EG	EQUIPMENT GROUND						

LEGEND :

INDICATES A DRAWING NOTE

208Y/120 VOLTS PANELBOARD

BRANCH CIRCUIT WIRING. ARROW INDICATE NUMBER OF CIRCUIT HOMERUNS TO PANELBOARD. CROSS MARKS INDICATE NUMBER OF PHASE & NEUTRAL CONDUCTORS. A DOT CROSSMARK INDICATE ISOLATED GREEN GROUNDING CONDUCTOR. A FLAGGED CROSSMARK INDICATE EQUIPMENT GROUNDING CONDUCTOR. PROVIDE 2#12+1#12G–3/4"C WHEN NOT NOTED.

DUPLEX RECEPTACLE: 2P–3W–20A–125V. SUBSCRIPTS ADJACENT TO SYMBOL INDICATE THE FOLLOWING (TYPICAL FOR ALL RECEPTACLES):

WP– WEATHERPROOF
GFI– GROUND FAULT INTERRUPTING
D– DEDICATED CIRCUIT
#– A NUMBER IDENTIFIES THE CIRCUIT FEEDING THE RESPECTIVE RECEPTACLE
EWC– ELECTRICAL WATER COOLER CONNECTION

ISOLATED GROUND DUPLEX RECEPTACLE

FLUSH FLOOR DUPLEX RECEPTACLE

DOUBLE DUPLEX RECEPTACLE WITH COMMON FACEPLATE

SPECIAL RECEPTACLE: POLES, WIRES, VOLTAGE AND AMPERAGE AS INDICATED BY NEMA DESIGNATION

RECEPTACLE MOUNTED 42" AFF

CEILING MOUNTED JUNCTION BOX PROVIDE CONDUIT, PULL STRING AND RING TO 6" ABOVE CEILING FOR INSTALLATION OF WIRING– VERIFTY CONDUIT SIZE FOR EQUIPMENT NOTED.

WALL MOUNTED JUNCTION BOX PROVIDE CONDUIT, PULL STRING AND RING TO 6" ABOVE CEILING FOR INSTALLATION OF WIRING– VERIFTY CONDUIT SIZE FOR EQUIPMENT NOTED.

FLUSH FLOOR JUNCTION BOX

S SINGLE POLE TOGGLE SWITCH. SUBSCRIPTS AT SW SYMBOL INDICATE THE FOLLOWING:
3 – THREE WAY P – PILOT LIGHT
a.b.c. IDENTIFICATION OF OUTLET CONTROLLED

W TELEPHONE OUTLET JUNCTION BOX, WALL MOUNTED 18" AFF SUBSCRIPT "W" INDICATES WALL MOUNTING +54"AFF. EXTEND 3/4" EMPTY CONDUIT FROM BOX UP TO CEILING SPACE

COMBINATION TELEPHONE AND DATA OUTLET JUNCTION BOX, WALL MOUNTED 18" AFF. EXTEND 3/4" EMPTY CONDUIT FROM BOX UP TO CEILING SPACE WITH PULL LINE. FACEPLATE SHALL BE PER COMMUNICATION VENDOR, APPROVED BY THE ARCH

TV COMBINATION DOUBLE DUPLEX RECEPTACLE, TELEPHONE AND DATA OUTLET (POKE THRU) EXACT LOCATION SHALL BE AS INDICATED ON ARCHITECTURAL DRAWINGS.

T/D TELEPHONE AND DATA OUTLET JUNCTION BOX, WALL MOUNTED 18" AFF. EXTEND 3/4" EMPTY CONDUIT FROM BOX UP TO CEILING SPACE

S_T MANUAL MOTOR STARTER WITH THERMAL OVERLOAD PROTECTION

HEAVY DUTY SAFETY SWITCH, RATING AS NOTED: 60/50 INDICATES 60A SWITCH WITH 50A FUSES, 60/NF INDICATES 60A SWITCH NON–FUSED, AND VOLTAGE AS REQUIRED

DARKENED SAFETY SWITCH INDICATES THAT SWITCH (AND MOTOR STARTER WHERE APPLICABLE) IS SUPPLIED WITH EQUIPMENT, CONNECTION BY THIS CONTRACTOR

ENCLOSED CIRCUIT BREAKER, SIZE AS NOTED, F INDICATES FLUSH MOUNTED, NO LETTER INDICATES SURFACE MOUNTED

MOTOR STARTER OR CONTROLLER, SIZE FOR LOAD SERVED, WITH HOA(HAND–OFF–AUTO) SWITCH. DARKENED MOTOR STARTER OR COTROLLER INDICATES THAT STARTER OR CONTROLLER IS SUPPLIED WITH EQUIPMENT.

COMBINATION MOTOR STARTER OR CONTROLLER/ DISCONNECT, SIZE FOR LOAD SERVED, WITH HOA(HAND–OFF–AUTO) SWITCH.

F MOTOR CONNECTION,NUMERAL INDICATES HORSEPOWER. "F" INDICATES FRACTIONAL HORSEPOWER, 120V., 1ø

LIGHTING:

A FIXTURE SYMBOL–LETTER INDICATES FIXTURE TYPE. SEE LIGHTING FIXTURE SCHEDULE

3 2' X 4' FLUORESCENT FIXTURE. A NUMBER ADJACENT TO SYMBOL IDENTIFIES THE CIRCUIT FEEDING THE RESPECTIVE LIGHTING FIXTURE

3 2' X 2' FLUORESCENT FIXTURE. A NUMBER ADJACENT TO SYMBOL IDENTIFIES THE CIRCUIT FEEDING THE RESPECTIVE LIGHTING FIXTURE

FLUORESCENT STRIP OR INDUSTRIAL FIXTURE

WALL MOUNTED FLUORESCENT FIXTURE

INCANDESCENT OR COMPACT FLUORESCENT FIXTURE

WALL WASHER INCANDESCENT OR FLUORESCENT FIXTURE

WALL MOUNTED INCANDESCENT FIXTURE

A DARKENED IN FIXTURE OUTLET AT THE FIXTURE INDICATES THAT IT IS ON AN EMERGENCY CIRCUIT. SUBSCRIPT "NL" INDICATES THAT THE FIXTURE IS A NITE LIGHT.

WALL OR CEILING MOUNTED EXIT LIGHT ON EMERGENCY CIRCUIT DARKENED QUARTER SECTION(S) DENOTES FACE(S), WITH DIRECTIONAL ARROW AS INDICATED ON PLANS

COMMUNCATIONS:

M MICROPHONE DESK MOUNTED

M– MICROPHONE WALL/SURFACE MOUNTED

A ALARM/PANIC BUTTON–MOUNTED TO UNDERSIDE OF COUNTER/SURFACE WHERE INDICATED VERIFY/COORDINATE TERMINATION POINTS WITH BUILING SECURITY AND US MARSHAL'S OFFICE

A– ALARM/PANIC BUTTON–WALL MOUNTED WERE INDICATED VERIFY/COORDINATE TERMINATION POINTS WITH BUILDING SECURITY AND US MARSHAL'S OFFICE

TM– ELECTRONIC TEXT MESSAGING SYSTEM–WALL MOUNTED VERIFY POWER/DATA REQUIREMENTS

TM ELECTRONIC TEXT MESSAGING SYSTEM–CEILING MOUNTED

B DOOR RELEASE BUZZER–MOUNTED TO UNDERSIDE OF COUNTER/SURFACE WHERE INDICATED

B WALL MOUNTED BUZZER

TV– COAXIAL CABLE TV CONNECTION; WALL MOUNTED; PROVIDE J–BOX AND CONDUIT TO 6" ABOVE FINISH CEILING WITH PULL STRING AND RING FOR USE BY CABLE INSTALLER

LIGHTING FIXTURE SCHEDULE

SYM	DESCRIPTION	MANUFACTURER	CATALOG No. AND VOLTAGE	LAMP DATA QUANT.	LAMP DATA WATT.	LAMP	MOUNTING REC	MOUNTING SURF.	MOUNTING WALL	MOUNTING PEND.	REMARKS
A	COMPACT FLUORESCENT DOWN LIGHT FIXTURE	OMEGA	OM62H26QPLCS 120	2	26	CF26DD/E/830	●				1 8
B	COMPACT FLUORESCENT WALL WASHER LIGHT FIXTURE	OMEGA	120	2	26	CF26DD/E/830	●				1 8 NOT USED
C	2'x2' FLUORESCENT FIXTURE WITH 16–3" DEEP CELL LOUVERS	DAY–BRITE BENJAMIN	2LP3GH331U144SL120 120	3	31	F031T8/SPX30	●				1 4
D	2'x4' FLUORESCENT FIXTURE WITH 32–3" DEEP CELL LOUVERS AND	DAY–BRITE BENJAMIN	2LP3GH232485L1/2EB 120	2	32	F32T8/SPX30	●				1 3 NOT USED
E1	WALL MOUNTED DIRECT/INDIRECT FLUORESCENT LIGHT FIXTURE	LEDALITE EURO 55	2218TO2WN0411EW 120	2	32	F32T8/SPX30			●		1 3 5 6
E2	WALL MOUNTED DIRECT/INDIRECT FLUORESCENT LIGHT FIXTURE	LEDALITE EURO 55	2218TO2WN0811EW 120	4	32	F32T8/SPX30			●		1 3 5 6
E3	WALL MOUNTED DIRECT/INDIRECT FLUORESCENT LIGHT FIXTURE	LEDALITE EURO 55	2218TO2WN1211EW 120	6	32	F32T8/SPX30			●		1 3 5 6
E4	WALL MOUNTED DIRECT/INDIRECT FLUORESCENT LIGHT FIXTURE	LEDALITE EURO 55	2218TO2WN2@0811EW 120	8	32	F32T8/SPX30			●		1 3 5 6
E5	WALL MOUNTED DIRECT/INDIRECT FLUORESCENT LIGHT FIXTURE	LEDALITE EURO 55	2218TO2WN3@12+1@08 11EW 120	16	32	F32T8/SPX30			●		1 3 5 6
E6	WALL MOUNTED DIRECT/INDIRECT FLUORESCENT LIGHT FIXTURE	LEDALITE EURO 55	2218TO2WN5@0811EW 120	20	32	F32T8/SPX30			●		1 3 5 6
E7	WALL MOUNTED DIRECT/INDIRECT FLUORESCENT LIGHT FIXTURE	LEDALITE EURO 55	2218TO2WN2@08+1@04 11EW 120	10	32	F32T8/SPX30			●		1 3 5 6
E8	WALL MOUNTED DIRECT/INDIRECT FLUORESCENT LIGHT FIXTURE	LEDALITE EURO 55	2218TO2WN4@1211EW 120	24	32	F32T8/SPX30			●		1 3 5 6
E9	WALL MOUNTED DIRECT/INDIRECT FLUORESCENT LIGHT FIXTURE	LEDALITE EURO 55	2218TO2WN4@12+1@08 11EW 120	28	32	F32T8/SPX30			●		1 3 5 6
E10	WALL MOUNTED DIRECT/INDIRECT FLUORESCENT LIGHT FIXTURE	LEDALITE EURO 55	2218TO2WN6@1211EW 120	36	32	F32T8/SPX30			●		1 3 5 6
E11	WALL MOUNTED DIRECT/INDIRECT FLUORESCENT LIGHT FIXTURE	LEDALITE EURO 55	2218TO2WN2@1211EW 120	12	32	F32T8/SPX30			●		1 3 5 6
E12	STEM MOUNTED DIRECT/INDIRECT FLUORESCENT LIGHT FIXTURE	LEDALITE EURO 55	2226TO2WND0411EW 120	2	32	F32T8/SPX30				●	1 3 5 6
E13	STEM MOUNTED DIRECT/INDIRECT FLUORESCENT LIGHT FIXTURE	LEDALITE EURO 55	2226TO2WND0831EW 120	4	32	F32T8/SPX30				●	1 3 5 6
E14	STEM MOUNTED DIRECT/INDIRECT FLUORESCENT LIGHT FIXTURE	LEDALITE EURO 55	2226TO2WND2@0831EW 120	8	32	F32T8/SPX30				●	1 3 5 6
E15	STEM MOUNTED DIRECT/INDIRECT FLUORESCENT LIGHT FIXTURE	LEDALITE EURO 55	2226TO2WND2@12+1@04 31EW 120	14	32	F32T8/SPX30				●	1 3 5 6
E16	STEM MOUNTED DIRECT/INDIRECT FLUORESCENT LIGHT FIXTURE	LEDALITE EURO 55	2226TO2WND7@1231EW 120	42	32	F32T8/SPX30				●	1 3 5 6
F	FINISH: BRUSHED ALUMINUM WITH WHITE LOUVER.	G LIGHTING	G12500–24 120	4	26	CF26DD/830				●	1 8
G1	4'–0" FLUORESCENT STRIP	DAY–BRITE BENJAMIN	T232120 120	2	32	F32T8/SPX30			●		1 3
G2	8'–0" STAGGERED FLUORESCENT STRIP	DAY–BRITE BENJAMIN	SS432120 120	4	32	F32T8/SPX30			●		1 3
G3	4'–0" STAGGERED FLUORESCENT STRIP	DAY–BRITE BENJAMIN	SS232120 120	2	32	F32T8/SPX30			●		1 3
G4	INFORMATION SIGN	CUSTOM	– 120	–	–	–			●		11
H	COMPACT FLUORESCENT DOWN LIGHT FIXTURE	DELRAY LIGHTING	H7.5232.A30 120	2	32	CF32DD/830	●				1 9
I	FLUORESCENT SHOWER FIXTURE	HUBBELL	D326 120	1	26	CF26DD/830	●				1 8
J	4' LONG GENERAL PURPOSE INDUSTRIAL FLUORESCENT	HUBBELL	1GT4RPP10B4 120	2	32	F32T8/SPX30				●	1 3
K	WALL MOUNTED SEAL NICKEL BATTERY W/ TWIN HEADS	McPHILBEN	ET6N18WSOA 120	2	9	INCLUDE W/FIXTURE			●		12
X	SINGLE FACE WALL MOUNTED LED EXIT LIGHT	McPHILBEN	45VLW1RCRW 120	–	–	INCLUDE W/FIXTURE			●		7
X1	SINGLE FACE CEILING MOUNTED LED EXIT LIGHT	McPHILBEN	45VL1RCRW 120	–	–	INCLUDE W/FIXTURE	●				7
X2	DOUBLE FACE CEILING MOUNTED LED EXIT LIGHT	McPHILBEN	45VL2RCRW 120	–	–	INCLUDE W/FIXTURE	●				7
X3	SINGLE FACE SURFACE MOUNTED LED EXIT LIGHT	McPHILBEN	45VLSW1RCRW 120	–	–	INCLUDE W/FIXTURE		●			7
X4	SINGLE FACE PENDANT MOUNTED LED EXIT LIGHT	McPHILBEN	45VLSP1RCRWP45 120	–	–	INCLUDE W/FIXTURE				●	7 10

LIGHTING FIXTURE NOTES:

1 LAMP ORDERING ABBREVIATION IS BASED ON OSRAM SYLVANIA

2 SINGLE LAMP ELECTRONIC BALLAST,BALLASTS BY ADVANCE, CAT. NO. REL–1P32–RH–TP NOT USED

3 TWO LAMP ELECTRONIC BALLAST, BY ADVANCE, CATALOG NO. REL–2P32–RH–TP

4 THREE LAMP ELECTRONIC BALLAST,BY ADVANCE, CATALOG NO. REL–3P32–RH–TP

5 SUBSTITUTIONS; INCLUDE COMPLETE PHOTOMETIC REPORTS AND POINT BY POINT CALCULATIONS

6 CONFIRM THE EXACT LENGTHS REQUIRED AND PROVIDE ALL THE NECESSARY PARTS AND ACCESSORIES TO INSURE PROPER INSTALLATION

7 (*) DIRECTIONAL ARROW AND MOUNTING AS INDICATED ON PLANS. WALL MOUNTED FIXTURES LOCATED ABOVE DOOR FRAME SHALL BE LOCATED AT THE CENTER BETWEEN DOOR FRAME AND CEILING.

8 SINGLE AND TWO LAMP ELECTRONIC BALLAST, BALLAST BY ADVANCE, CAT. NO. ICF–2S26–H1–XX

9 TWO LAMP ELECTRONIC BALLAST, BALLAST BY ADVANCE, CAT. NO. ICF–2S42–M2–XX

10 PENDANT MOUNT EXIT FIXTURE 9'–0" ABOVE FINISH FLOOR

11 SIGNAGE FIXTURE TO BE FURNISHED BY OWNER AND INSTALLED BY ELECTRICAL CONTRACTOR.

12 WALL MOUNTED BATTERY PACK SHALL BE MOUNTED 8'–6" ABOVE FINISH FLOOR.

Interior Improvements to DC Superior Courts Building 'B'

409 E Street, NW
Washington, DC 20001

U.S. General Services Administration
301 7th Street, SW, Room 2021
Washington, DC 20407

LEO A DALY
PLANNING ARCHITECTURE ENGINEERING INTERIORS
EST. 1915
1201 Connecticut Ave, NW
Washington DC 20036 USA
Tel 202-861-4600 Fax 202-872-8530

Dalco Incorporated
10005 Old Columbia Road Suite L261
Columbia, MD 21046
Tel: 410-290-8827
Fax: 410-290-8812

Contractor
Address

KEY PLAN

ISSUES / REVISIONS

NO.	DESCRIPTION	DATE

FILE LOG

ACTIVITY	REFERENCE	BY
Manager		KSL
Design		MA
Draw		MCY
Draw		
Draw		
Check		KA

REGISTRATION

JOB No 52010300

CONSTRUCTION PACKAGE

ISSUED FOR CONSTRUCTION (FINAL) APRIL 8, 2003

ELECTRICAL COVER SHEET

E0.01

© Leo A Daly Company 2003

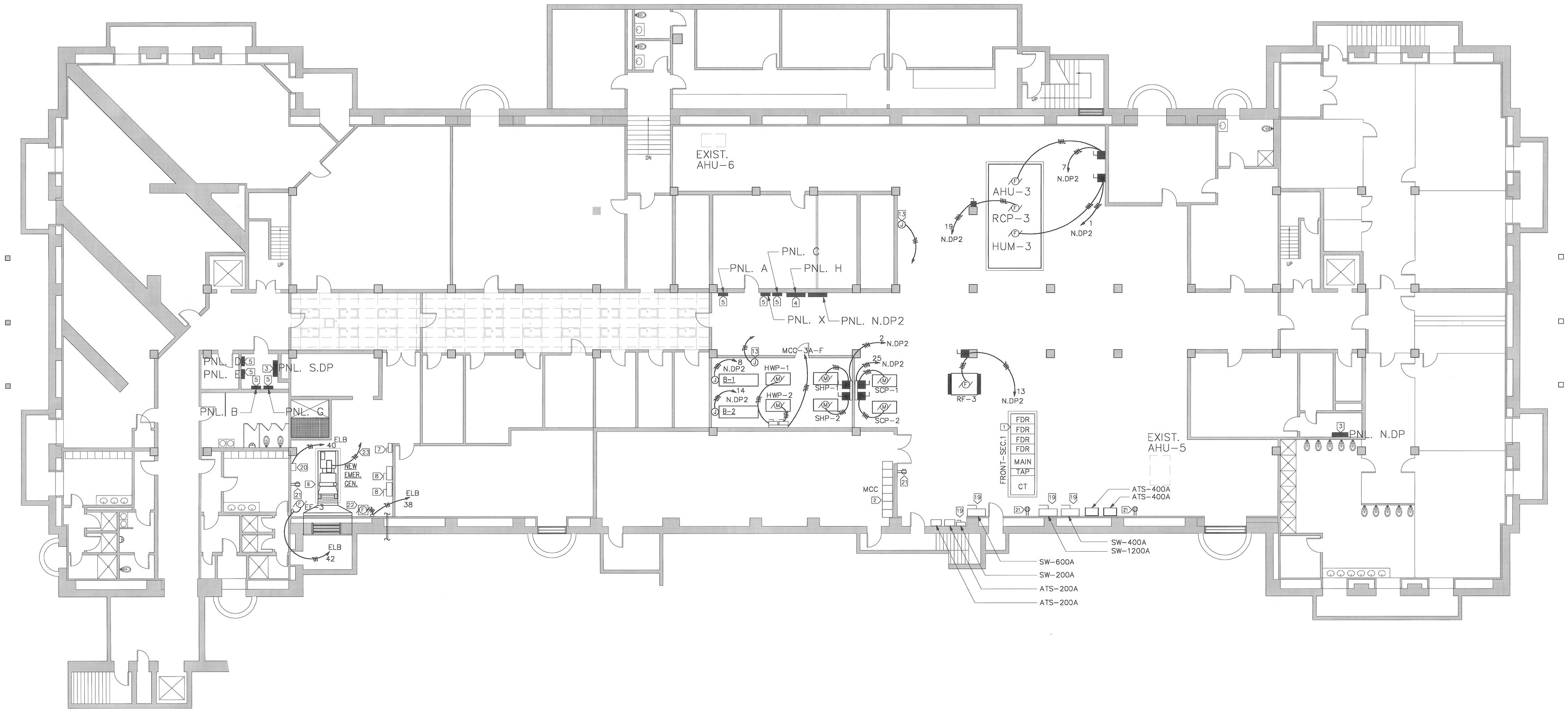

1 E1.0B POWER PLAN-BASEMENT
SCALE: 1/8"=1'-0"

POWER NOTES

1. SWITCHBOARD.
2. EXISTING MOTOR CONTROL CENTER.
3. DISTRIBUTION PANEL(DP).
4. EXISTING DISTRIBUTION PANEL H.
5. EXISTING PANEL.
6. STAND-BY DIESEL GENERATOR.
7. DISCONNECT SWITCH.
8. DISCONNECT SWITCH.
9. AUTOMATIC TRANSFER SWITCH.
10. FOR EXACT LOCATION AND MOUNTING HEIGHTS OF ALL POWER, TELEPHONE/DATA OUTLETS AND JUNCTION BOXES, SEE ARCHITECTURAL DRAWINGS
11. CIRCUITS ARE DESIGNATED BY THE NUMBER SHOWN ADJACENT TO EACH RECEPTACLE. WIRING IS SHOWN ONLY UNDER SPECIAL CIRCUMSTANCES PROVIDE CONDUITS, WIRES AND BOXES REQUIRED FOR THE EQUIPMENT
12. CIRCUIT NUMBERS ARE FOR REFERENCE ONLY. FIELD CONDITIONS PREVAIL. CONTRACTOR SHALL VERIFY ALL CIRCUIT NUMBERS AND PANELBOARD NAMES AND LOCATIONS AND AVAILABILITY OF EACH CIRCUIT BASED UPON THE TOTAL CONNECTED LOAD ALL SIGNAL AND TELEPHONE CABLES SHALL BE TEFLON INSULATED AND JACKETED AND SHALL RUN ABOVE HUNG CEILING
13. PROVIDE POWER FOR CONTROL OF MECHANICAL EQUIPMENT. MECHANICAL CONTRACTOR WILL PROVIDE LOW VOLTAGE TRANSFORMER, BUT THIS CONTRACTOR SHALL MAKE FINAL CONNECTION.
14. DOMESTIC WATER HEATER. SEE PLUMBING DRAWING FOR EXACT LOCATION.
15. COURT SHALL MAKE WALL IN EACH ELECTRICAL/TELECOM ROOM FULLY ACCESSABLE FOR ELECTRICAL EQUIPMENT. WALL SHALL BE FREE FROM PA, IT AND TELEPHONE EQUIPMENT.
16. TAG CIRCUIT NUMBER AND PANELBOARD FOR ALL JUNCTION BOXES AND WIRING DEVICES IN ALL LOCATIONS.
17. PROVIDE POWER FOR CONTROL OF MECHANICAL EQUIPMENT. MECHANICAL CONTRACTOR WILL PROVIDE LOW VOLTAGE TRANSFORMER, BUT THIS CONTRACTOR SHALL MAKE FINAL CONNECTION.
18. PROVIDE POWER FOR SECURTY SYSTEM.
19. PROVIDE 10 FT TAP RULES FOR ALL TAP SERVICES, TYPICAL OF FOUR(4).
20. BATTERY CHARGER.
21. CONNECT TO EXISTING CIRCUIT 1P-20A-120V AVAILABLE IN THIS AREA.
22. PROVIDE A 30A NON-FUSED SAFETY SWITCH FOR DAY TANK PUMP.
23. PROVIDE A 2-POLE 20A CIRCUIT BREAKER IN LIGHTING AND APPLIANCE PANELBOARD LOCATED IN THIS AREA TO SUPPORT THE JACKET HEATER.

Interior Improvements to DC Superior Courts Building 'B'

409 E Street, NW
Washington, DC 20001

U.S. General Services Administration
301 7th Street, SW, Room 2021
Washington, DC 20407

LEO A DALY
1201 Connecticut Ave, NW
Washington DC 20036 USA
Tel 202-861-4600 Fax 202-872-8530

Dalco
10005 Old Columbia Road Suite L261
Columbia, MD 21046
Tel: 410-290-8827
Fax: 410-290-8812

Contractor
Address

KEY PLAN

ISSUES / REVISIONS

NO.	DESCRIPTION	DATE

FILE LOG

ACTIVITY	REFERENCE	BY
Manager		KSL
Design		MA
Draw		MCY
Draw		
Draw		
Check		KA

REGISTRATION

JOB No 52010300

CONSTRUCTION PACKAGE

ISSUED FOR CONSTRUCTION (FINAL) APRIL 8, 2003

POWER PLAN-BASEMENT

E1.00

© Leo A Daly Company 2003

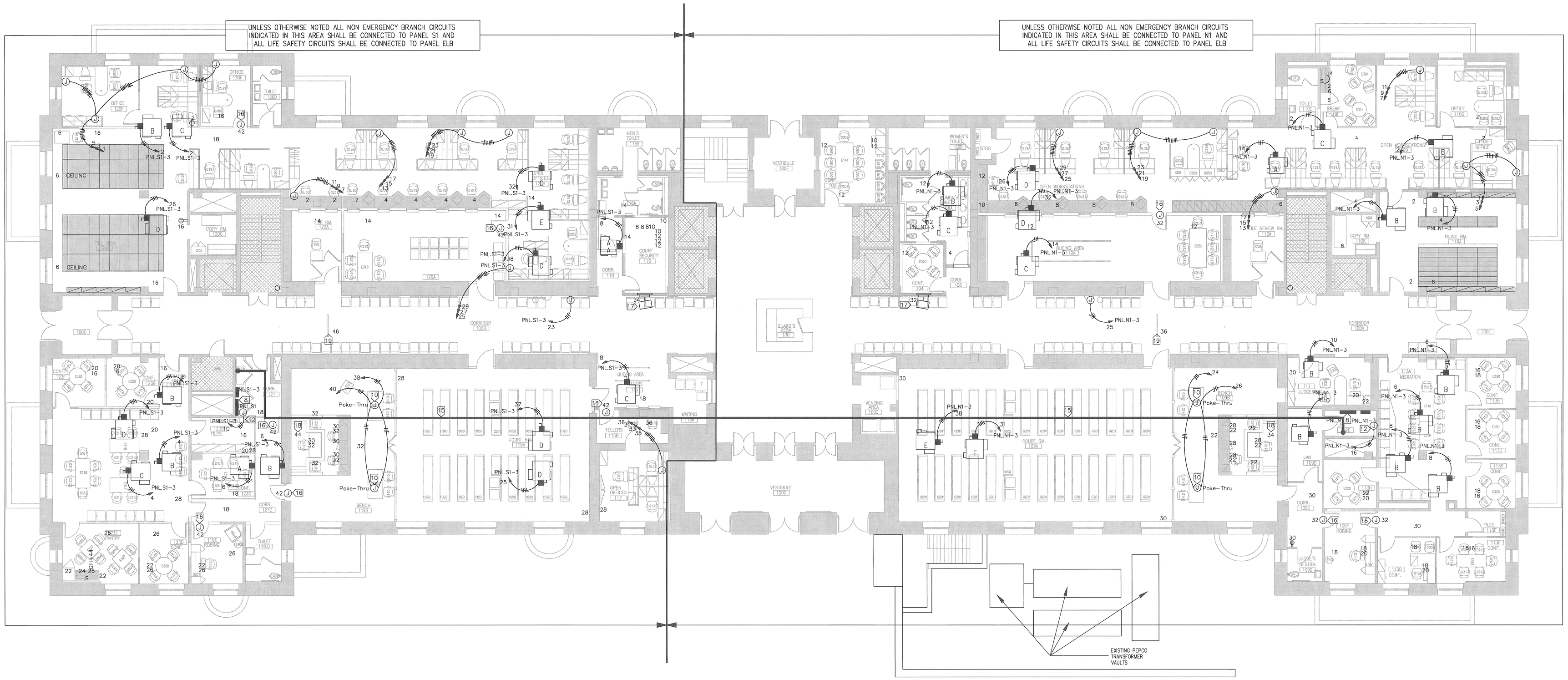

1 E1.01 POWER PLAN-FIRST FLOOR
SCALE: 1/8"=1'-0"

NORTH

POWER NOTES

1. FOR EXACT LOCATION AND MOUNTING HEIGHTS OF ALL POWER, TELEPHONE/DATA OUTLETS AND JUNCTION BOXES, SEE ARCHITECTURAL DRAWINGS
2. CIRCUITS ARE DESIGNATED BY THE NUMBER SHOWN ADJACENT TO EACH RECEPTACLE. WIRING IS SHOWN ONLY UNDER SPECIAL CIRCUMSTANCES PROVIDE CONDUITS, WIRES AND BOXES REQUIRED FOR THE EQUIPMENT
3. SYSTEM FURNITURE PROVIDED BY OTHERS IS 8-WIRE ELECTRICAL SYSTEM WITH 3#12 AWG CIRCUITS, 3#10 AWG NEUTRALS AND 2#12 AWG. GROUND WIRES. ELECTRICAL CONTRACTOR SHALL COORDINATE WITH SYSTEM FURNITURE MANUFACTURER. FURNITURE WHIPS FURNISHED AND INSTALLED BY OTHERS, BUT FINAL CONNECTIONS SHALL BE DONE BY THIS CONTRACTOR. ALSO, COORDINATE WITH ARCHITECTURAL DRAWINGS FOR EXACT LOCATION OF JUNCTION BOXES.
4. CIRCUIT NUMBERS ARE FOR REFERENCE ONLY. FIELD CONDITIONS PREVAIL. CONTRACTOR SHALL VERIFY ALL CIRCUIT NUMBERS AND PANELBOARD NAMES AND LOCATIONS AND AVAILABILITY OF EACH CIRCUIT BASED UPON THE TOTAL CONNECTED LOAD ALL SIGNAL AND TELEPHONE CABLES SHALL BE TEFLON INSULATED AND JACKETED AND SHALL RUN ABOVE HUNG CEILING
5. PROVIDE POWER FOR CONTROL OF MECHANICAL EQUIPMENT. MECHANICAL CONTRACTOR WILL PROVIDE LOW VOLTAGE TRANSFORMER, BUT THIS CONTRACTOR SHALL MAKE FINAL CONNECTION.
6. DOMESTIC WATER HEATER. SEE PLUMBING DRAWING FOR EXACT LOCATION.
7. EXHAUST FAN, SEE MECHANICAL DRAWING FOR EXACT LOCATION.
8. DOUBLE SECTION PANELBOARD, 225A, 120/208V. SEE POWER RISER AND ONE-LINE DIAGRAMS FOR MORE DETAILS.
9. COURT SHALL MAKE WALL IN EACH ELECTRICAL/TELECOM ROOM FULLY ACCESSABLE FOR ELECTRICAL EQUIPMENT. WALL SHALL BE FREE FROM PA, IT AND TELEPHONE EQUIPMENT.
10. POKE-THRU FOR DATA/TEL/POWER AND OUTLETS. COORDINATE WITH ARCHITECTURAL DRAWINGS FOR EXACT LOCATION.
11. TAG CIRCUIT NUMBER AND PANELBOARD FOR ALL JUNCTION BOXES AND WIRING DEVICES IN ALL LOCATIONS.
12. PROVIDE POWER FOR CONTROL OF MECHANICAL EQUIPMENT. MECHANICAL CONTRACTOR WILL PROVIDE LOW VOLTAGE TRANSFORMER, BUT THIS CONTRACTOR SHALL MAKE FINAL CONNECTION.
13. PROVIDE POWER FOR CEILING MOUNTED ELECTRONIC MESSAGING SYSTEM.
14. PROVIDE POWER FOR SECURTY SYSTEM.
15. CABLE TRAY 24" BY 6" AS SHOWN WITH 4-4 INCH SLEEVES CROSS HALLWAY. COORDINATE WITH MECHANICAL CONTRACTOR BEFORE FINAL INSTALLATION.
16. PROVIDE POWER FOR CARD READERS. COORDINATE WITH SECURITY CONTRACTOR.
17. PROVIDE TWO SETS OF POWER AND DATA FOR WALL MOUNTED TV WITH ONE AT 30" AFF AND THE SECOND AT 96" AFF. CONNECT TO CIRCUIT AS SHOWN. SEE ARCHITECTURAL DRAWINGS FOR EXACT LOCATIONS.
18. PROVIDE POWER AND DATA FOR PLASMA TV SCREEM AT WALL ABOVE AND BEHIND JUDGE WITH 84" AFF. CONNECT TO CIRCUIT AS SHOWN. SEE ARCHITECTURAL DRAWINGS FOR EXACT LOCATIONS.
19. PROVIDE POWER AND DATA FOR CEILING MOUNTED ELECTRONIC MESSAGING SYSTEM. SEE ARCHITECTURAL DRAWINGS FOR EXACT LOCATIONS.

Interior Improvements to DC Superior Courts Building 'B'

409 E Street, NW
Washington, DC 20001

U.S. General Services Administration
301 7th Street, SW, Room 2021
Washington, DC 20407

LEO A DALY
PLANNING ARCHITECTURE ENGINEERING INTERIORS
CBT. 1915

1201 Connecticut Ave, NW
Washington DC 20036 USA
Tel 202-861-4600 Fax 202-872-8530

Dalco Incorporated
10005 Old Columbia Road Suite L261
Columbia, MD 21046
Tel: 410-290-8827
Fax: 410-290-8812

Contractor
Address

KEY PLAN

ISSUES / REVISIONS

NO.	DESCRIPTION	DATE

FILE LOG

ACTIVITY	REFERENCE	BY
Manager		KSL
Design		MA
Draw		MCV
Draw		
Draw		
Check		KA

REGISTRATION

JOB No 52010300

CONSTRUCTION PACKAGE

ISSUED FOR CONSTRUCTION (FINAL) APRIL 8, 2003

POWER PLAN-FIRST FLOOR

E1.01

© Leo A Daly Company 2003

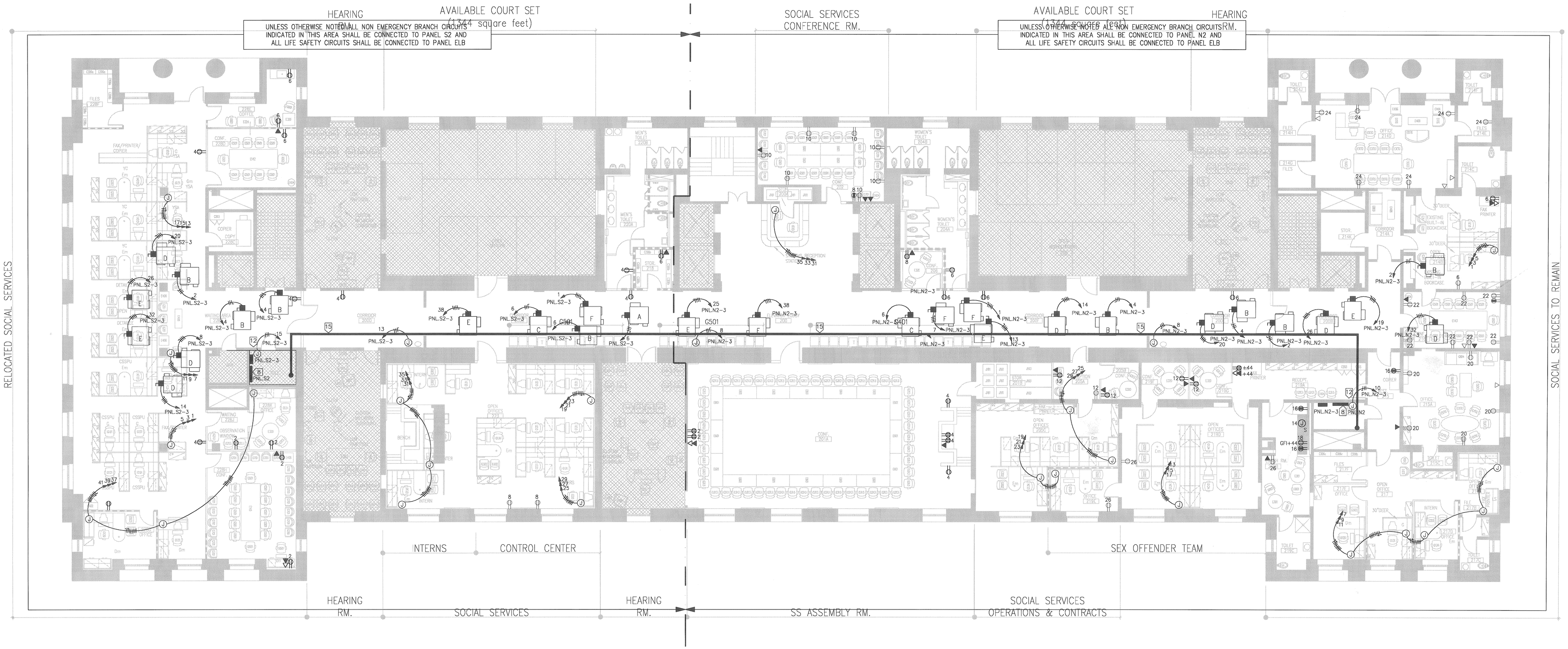

1 POWER PLAN-SECOND FLOOR
E1.02 SCALE: 1/8"=1'-0"

NORTH

POWER NOTES

1. FOR EXACT LOCATION AND MOUNTING HEIGHTS OF ALL POWER, TELEPHONE/DATA OUTLETS AND JUNCTION BOXES, SEE ARCHITECTURAL DRAWINGS
2. CIRCUITS ARE DESIGNATED BY THE NUMBER SHOWN ADJACENT TO EACH RECEPTACLE. WIRING IS SHOWN ONLY UNDER SPECIAL CIRCUMSTANCES PROVIDE CONDUITS, WIRES AND BOXES REQUIRED FOR THE EQUIPMENT
3. SYSTEM FURNITURE PROVIDED BY OTHERS IS 8-WIRE ELECTRICAL SYSTEM WITH 3#12 AWG CIRCUITS, 3#10 AWG NEUTRALS AND 2#12 AWG. GROUND WIRES. ELECTRICAL CONTRACTOR SHALL COORDINATE WITH SYSTEM FURNITURE MANUFACTURER. FURNITURE WHIPS FURNISHED AND INSTALLED BY OTHERS, BUT FINAL CONNECTIONS SHALL BE DONE BY THIS CONTRACTOR. ALSO, COORDINATE WITH ARCHITECTURAL DRAWINGS FOR EXACT LOCATION OF JUNCTION BOXES.
4. CIRCUIT NUMBERS ARE FOR REFERENCE ONLY. FIELD CONDITIONS PREVAIL. CONTRACTOR SHALL VERIFY ALL CIRCUIT NUMBERS AND PANELBOARD NAMES AND LOCATIONS AND AVAILABILITY OF EACH CIRCUIT BASED UPON THE TOTAL CONNECTED LOAD ALL SIGNAL AND TELEPHONE CABLES SHALL BE TEFLON INSULATED AND JACKETED AND SHALL RUN ABOVE HUNG CEILING
5. PROVIDE POWER FOR CONTROL OF MECHANICAL EQUIPMENT. MECHANICAL CONTRACTOR WILL PROVIDE LOW VOLTAGE TRANSFORMER, BUT THIS CONTRACTOR SHALL MAKE FINAL CONNECTION.
6. DOMESTIC WATER HEATER. SEE PLUMBING DRAWING FOR EXACT LOCATION.
7. EXHAUST FAN, SEE MECHANICAL DRAWING FOR EXACT LOCATION.
8. DOUBLE SECTION PANELBOARD, 225A, 120/208V. SEE POWER RISER AND ONE-LINE DIAGRAMS FOR MORE DETAILS.
9. COURT SHALL MAKE WALL IN EACH ELECTRICAL/TELECOM ROOM FULLY ACCESSABLE FOR ELECTRICAL EQUIPMENT. WALL SHALL BE FREE FROM PA, IT AND TELEPHONE EQUIPMENT.
10. POKE-THRU FOR DATA/TEL/POWER AND OUTLETS. COORDINATE WITH ARCHITECTURAL DRAWINGS FOR EXACT LOCATION.
11. TAG CIRCUIT NUMBER AND PANELBOARD FOR ALL JUNCTION BOXES AND WIRING DEVICES IN ALL LOCATIONS.
12. PROVIDE POWER FOR CONTROL OF MECHANICAL EQUIPMENT. MECHANICAL CONTRACTOR WILL PROVIDE LOW VOLTAGE TRANSFORMER, BUT THIS CONTRACTOR SHALL MAKE FINAL CONNECTION.
13. PROVIDE POWER FOR CEILING MOUNTED ELECTRONIC MESSAGING SYSTEM.
14. PROVIDE POWER FOR SECURTY SYSTEM.
15. CABLE TRAY 24" BY 6" AS SHOWN WITH 4-4 INCH SLEEVES CROSS HALLWAY. COORDINATE WITH MECHANICAL CONTRACTOR BEFORE FINAL INSTALLATION.
16. PROVIDE POWER FOR CARD READERS. COORDINATE WITH SECURITY CONTRACTOR.

Interior Improvements to DC Superior Courts Building 'B'

409 E Street, NW
Washington, DC 20001

U.S. General Services Administration
301 7th Street, SW, Room 2021
Washington, DC 20407

LEO A DALY
PLANNING ARCHITECTURE ENGINEERING INTERIORS
EST. 1915
1201 Connecticut Ave, NW
Washington DC 20036 USA
Tel 202-861-4600 Fax 202-872-8530

Dalco INCORPORATED
10005 Old Columbia Road Suite L261
Columbia, MD 21046
Tel: 410-290-8827
Fax: 410-290-8812

Contractor
Address

KEY PLAN

ISSUES / REVISIONS

NO.	DESCRIPTION	DATE

FILE LOG

ACTIVITY	REFERENCE	BY
Manager		KSL
Design		MA
Draw		MCY
Draw		
Draw		
Check		KA

REGISTRATION

JOB No 52010300

CONSTRUCTION PACKAGE

ISSUED FOR CONSTRUCTION (FINAL) APRIL 8, 2003

POWER PLAN-SECOND FLOOR

E1.02

© Leo A Daly Company 2003

UNLESS OTHERWISE NOTED ALL NON EMERGENCY BRANCH CIRCUITS INDICATED IN THIS AREA SHALL BE CONNECTED TO PANEL S3 AND ALL LIFE SAFETY CIRCUITS SHALL BE CONNECTED TO PANEL ELB

UNLESS OTHERWISE NOTED ALL NON EMERGENCY BRANCH CIRCUITS INDICATED IN THIS AREA SHALL BE CONNECTED TO PANEL N3 AND ALL LIFE SAFETY CIRCUITS SHALL BE CONNECTED TO PANEL ELB

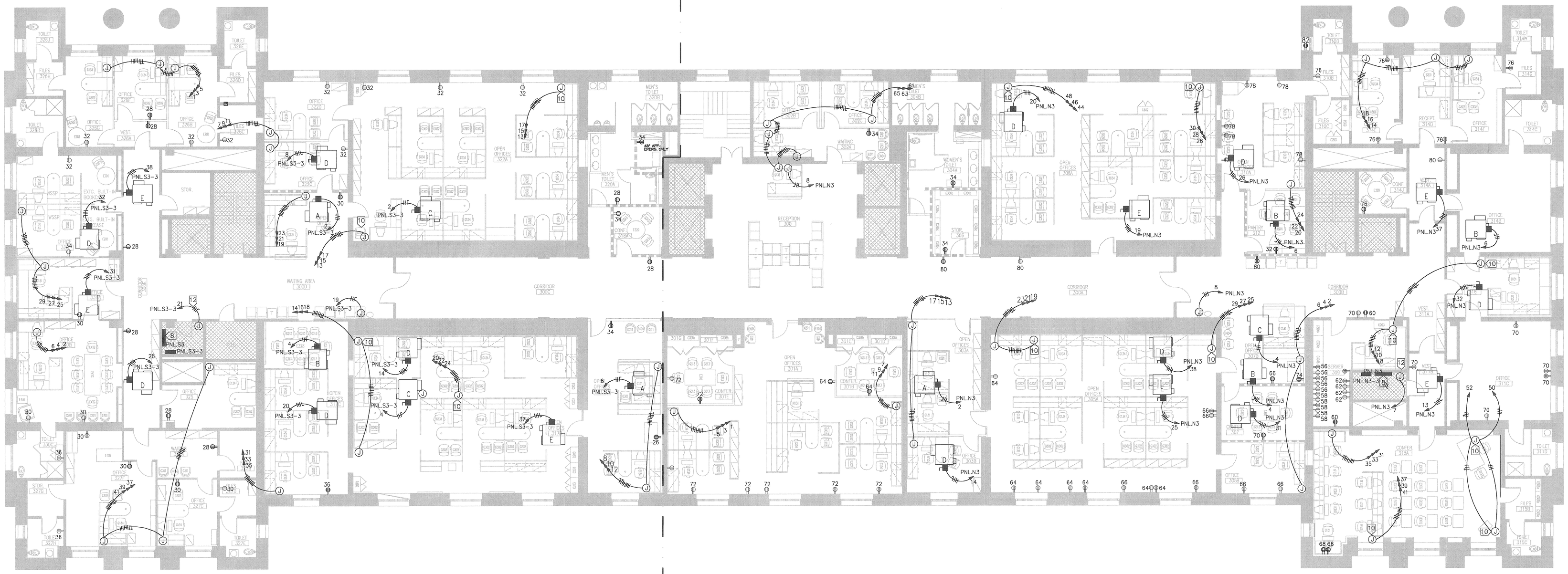

1 / E1.03 POWER PLAN–THIRD FLOOR
SCALE: 1/8"=1'–0"

POWER NOTES

1. FOR EXACT LOCATION AND MOUNTING HEIGHTS OF ALL POWER, TELEPHONE/DATA OUTLETS AND JUNCTION BOXES, SEE ARCHITECTURAL DRAWINGS
2. CIRCUITS ARE DESIGNATED BY THE NUMBER SHOWN ADJACENT TO EACH RECEPTACLE. WIRING IS SHOWN ONLY UNDER SPECIAL CIRCUMSTANCES PROVIDE CONDUITS, WIRES AND BOXES REQUIRED FOR THE EQUIPMENT
3. SYSTEM FURNITURE PROVIDED BY OTHERS IS 8–WIRE ELECTRICAL SYSTEM WITH 3#12 AWG CIRCUITS, 3#10 AWG NEUTRALS AND 2#12 AWG. GROUND WIRES. ELECTRICAL CONTRACTOR SHALL COORDINATE WITH SYSTEM FURNITURE MANUFACTURER. FURNITURE WHIPS FURNISHED AND INSTALLED BY OTHERS, BUT FINAL CONNECTIONS SHALL BE DONE BY THIS CONTRACTOR. ALSO, COORDINATE WITH ARCHITECTURAL DRAWINGS FOR EXACT LOCATION OF JUNCTION BOXES.
4. CIRCUIT NUMBERS ARE FOR REFERENCE ONLY. FIELD CONDITIONS PREVAIL. CONTRACTOR SHALL VERIFY ALL CIRCUIT NUMBERS AND PANELBOARD NAMES AND LOCATIONS AND AVAILABILITY OF EACH CIRCUIT BASED UPON THE TOTAL CONNECTED LOAD ALL SIGNAL AND TELEPHONE CABLES SHALL BE TEFLON INSULATED AND JACKETED AND SHALL RUN ABOVE HUNG CEILING
5. PROVIDE POWER FOR CONTROL OF MECHANICAL EQUIPMENT. MECHANICAL CONTRACTOR WILL PROVIDE LOW VOLTAGE TRANSFORMER, BUT THIS CONTRACTOR SHALL MAKE FINAL CONNECTION.
6. DOMESTIC WATER HEATER. SEE PLUMBING DRAWING FOR EXACT LOCATION.
7. EXHAUST FAN, SEE MECHANICAL DRAWING FOR EXACT LOCATION.
8. DOUBLE SECTION PANELBOARD, 225A, 120/208V. SEE POWER RISER AND ONE–LINE DIAGRAMS FOR MORE DETAILS.
9. COURT SHALL MAKE WALL IN EACH ELECTRICAL/TELECOM ROOM FULLY ACCESSABLE FOR ELECTRICAL EQUIPMENT. WALL SHALL BE FREE FROM PA, IT AND TELEPHONE EQUIPMENT.
10. POKE–THRU FOR DATA/TEL/POWER AND OUTLETS. COORDINATE WITH ARCHITECTURAL DRAWINGS FOR EXACT LOCATION.
11. TAG CIRCUIT NUMBER AND PANELBOARD FOR ALL JUNCTION BOXES AND WIRING DEVICES IN ALL LOCATIONS.
12. PROVIDE POWER FOR CONTROL OF MECHANICAL EQUIPMENT. MECHANICAL CONTRACTOR WILL PROVIDE LOW VOLTAGE TRANSFORMER, BUT THIS CONTRACTOR SHALL MAKE FINAL CONNECTION.
13. PROVIDE POWER FOR CEILING MOUNTED ELECTRONIC MESSAGING SYSTEM.
14. PROVIDE POWER FOR SECURTY SYSTEM.
15. CABLE TRAY 24" BY 6" AS SHOWN WITH 4–4 INCH SLEEVES CROSS HALLWAY. COORDINATE WITH MECHANICAL CONTRACTOR BEFORE FINAL INSTALLATION.
16. PROVIDE POWER FOR CARD READERS. COORDINATE WITH SECURITY CONTRACTOR.

Interior Improvements to
DC Superior Courts
Building 'B'

409 E Street, NW
Washington, DC 20001

U.S. General Services Administration
301 7th Street, SW, Room 2021
Washington, DC 20407

LEO A DALY
PLANNING ARCHITECTURE ENGINEERING INTERIORS
EST 1915
1201 Connecticut Ave, NW
Washington DC 20036 USA
Tel 202-861-4600 Fax 202-872-8530

Dalco Incorporated
10005 Old Columbia Road Suite L261
Columbia, MD 21046
Tel: 410-290-8827
Fax: 410-290-8812

Contractor
Address

KEY PLAN

ISSUES / REVISIONS

NO.	DESCRIPTION	DATE

FILE LOG

ACTIVITY	REFERENCE	BY
Manager		KM
Design		HA
Draw		MCV
Draw		
Draw		
Check		KA

REGISTRATION

JOB No 52010300

CONSTRUCTION PACKAGE

ISSUED FOR CONSTRUCTION
(FINAL) APRIL 8, 2003

POWER PLAN-THIRD FLOOR

E1.03

© Leo A Daly Company 2003

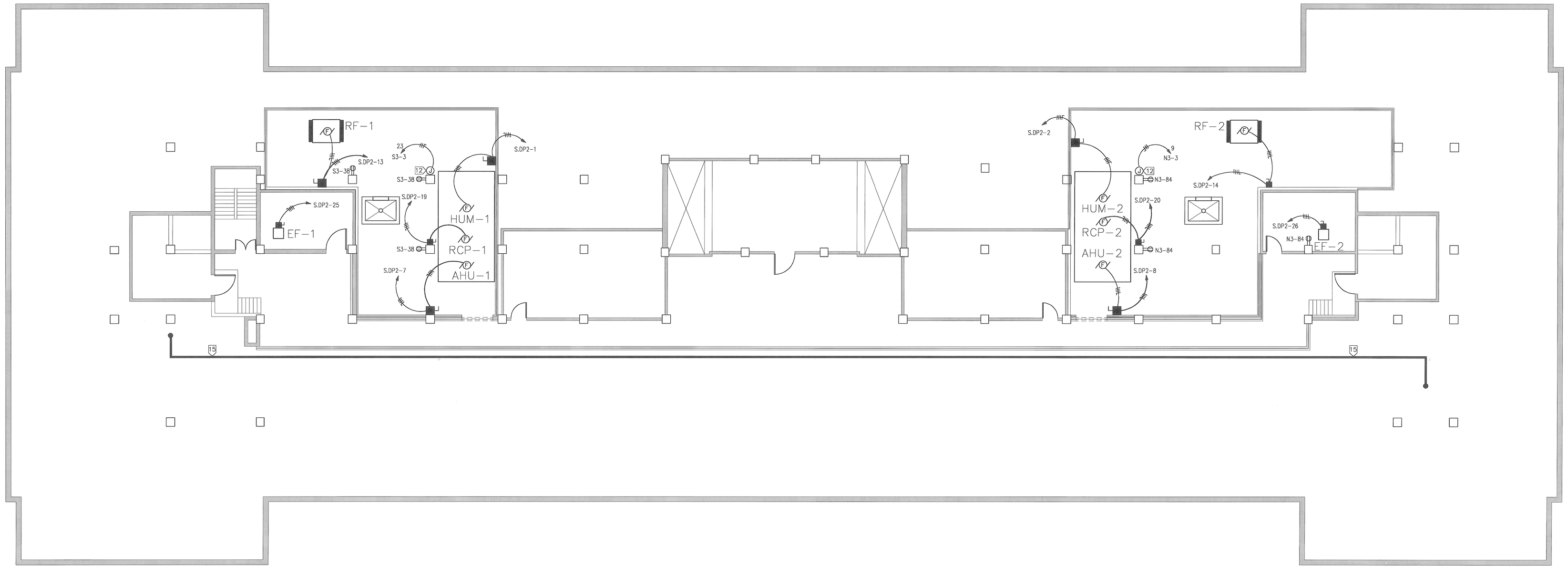

1 E1.AT POWER PLAN-ATTIC
SCALE: 1/8"=1'-0"

NORTH

POWER NOTES

1. FOR EXACT LOCATION AND MOUNTING HEIGHTS OF ALL POWER, TELEPHONE/DATA OUTLETS AND JUNCTION BOXES, SEE ARCHITECTURAL DRAWINGS
2. CIRCUITS ARE DESIGNATED BY THE NUMBER SHOWN ADJACENT TO EACH RECEPTACLE. WIRING IS SHOWN ONLY UNDER SPECIAL CIRCUMSTANCES PROVIDE CONDUITS, WIRES AND BOXES REQUIRED FOR THE EQUIPMENT
3. NOT USED.
4. CIRCUIT NUMBERS ARE FOR REFERENCE ONLY. FIELD CONDITIONS PREVAIL. CONTRACTOR SHALL VERIFY ALL CIRCUIT NUMBERS AND PANELBOARD NAMES AND LOCATIONS AND AVAILABILITY OF EACH CIRCUIT BASED UPON THE TOTAL CONNECTED LOAD ALL SIGNAL AND TELEPHONE CABLES SHALL BE TEFLON INSULATED AND JACKETED AND SHALL RUN ABOVE HUNG CEILING
5. PROVIDE POWER FOR CONTROL OF MECHANICAL EQUIPMENT. MECHANICAL CONTRACTOR WILL PROVIDE LOW VOLTAGE TRANSFORMER, BUT THIS CONTRACTOR SHALL MAKE FINAL CONNECTION.
6. DOMESTIC WATER HEATER. SEE PLUMBING DRAWING FOR EXACT LOCATION.
7. EXHAUST FAN, SEE MECHANICAL DRAWING FOR EXACT LOCATION.
8. NOT USED.
9. NOT USED.
10. NOT USED.
11. TAG CIRCUIT NUMBER AND PANELBOARD FOR ALL JUNCTION BOXES AND WIRING DEVICES IN ALL LOCATIONS.
12. PROVIDE POWER FOR CONTROL OF MECHANICAL EQUIPMENT. MECHANICAL CONTRACTOR WILL PROVIDE LOW VOLTAGE TRANSFORMER, BUT THIS CONTRACTOR SHALL MAKE FINAL CONNECTION.
13. NOT USED.
14. PROVIDE POWER FOR SECURTY SYSTEM.
15. CABLE TRAY 24" BY 6" AS SHOWN WITH 4-4 INCH SLEEVES CROSS HALLWAY. COORDINATE WITH MECHANICAL CONTRACTOR BEFORE FINAL INSTALLATION.

Interior Improvements to DC Superior Courts Building 'B'

409 E Street, NW
Washington, DC 20001

U.S. General Services Administration
301 7th Street, SW, Room 2021
Washington, DC 20407

LEO A DALY
PLANNING ARCHITECTURE ENGINEERING INTERIORS
EST. 1915
1201 Connecticut Ave, NW
Washington DC 20036 USA
Tel 202-861-4600 Fax 202-872-8530

Dalco INCORPORATED
10005 Old Columbia Road Suite L261
Columbia, MD 21046
Tel: 410-290-8827
Fax: 410-290-8812

Contractor
Address

KEY PLAN

ISSUES / REVISIONS

NO.	DESCRIPTION	DATE

FILE LOG

ACTIVITY	REFERENCE	BY
Manager		KSL
Design		MA
Draw		MCY
Draw		
Draw		
Check		KA

REGISTRATION

JOB No 52010300

CONSTRUCTION PACKAGE

ISSUED FOR CONSTRUCTION (FINAL) APRIL 8, 2003

POWER PLAN-ATTIC

E1.04

© Leo A Daly Company 2003

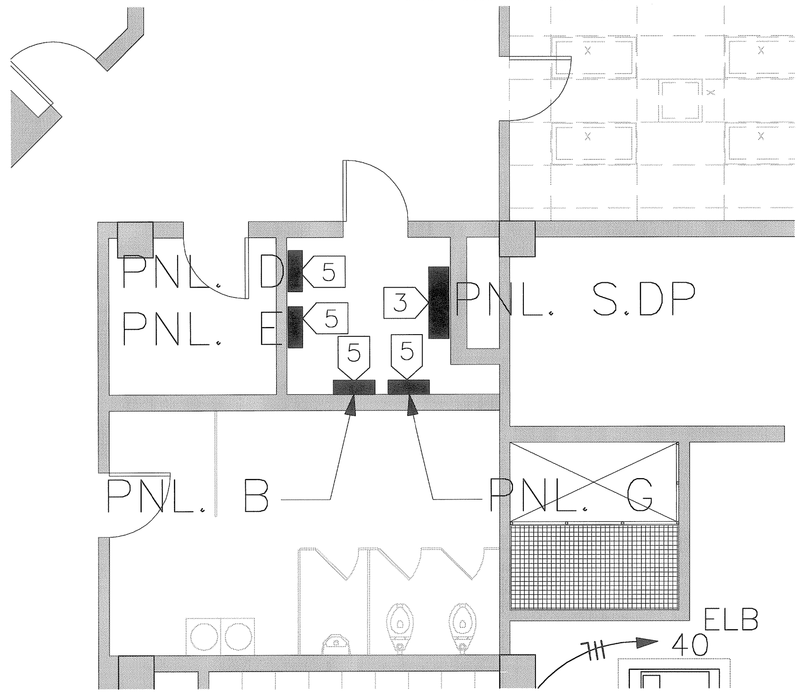

BASEMENT ELECTRICAL CLOSET–SOUTH
1 E1.05 SCALE: 1/4"=1'-0"

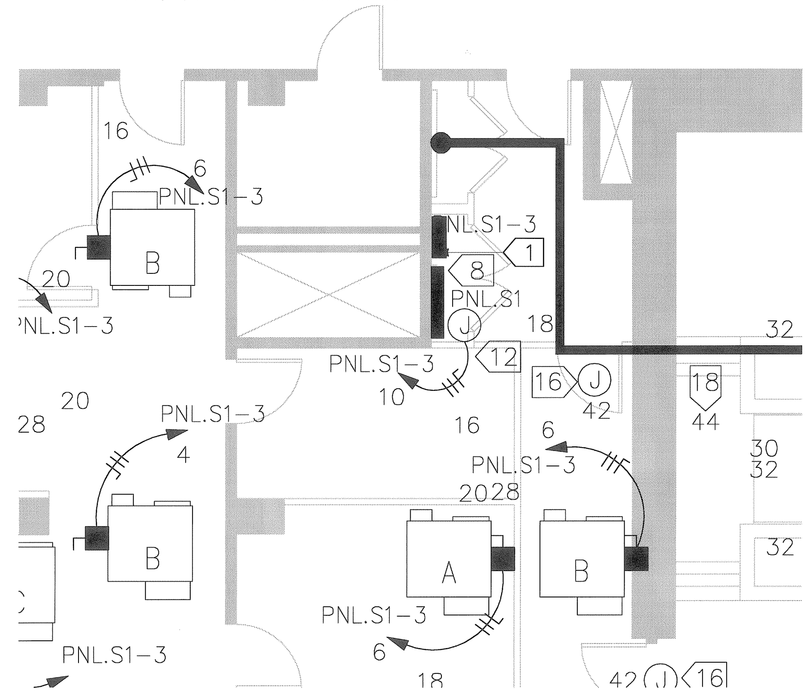

1ST FLOOR ELECTRICAL CLOSET–SOUTH
2 E1.05 SCALE: 1/4"=1'-0"

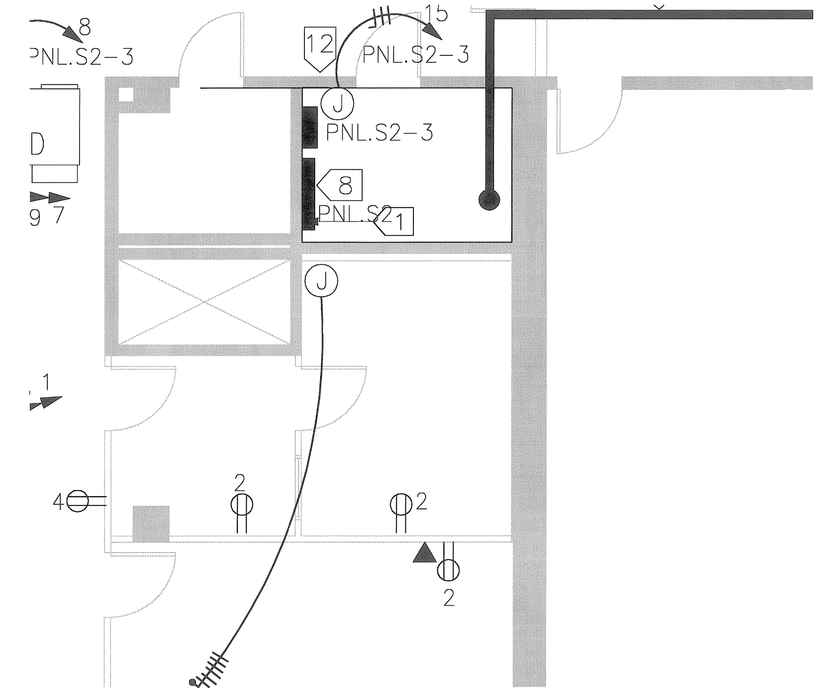

2ND FLOOR ELECTRICAL CLOSET–SOUTH
3 E1.05 SCALE: 1/4"=1'-0"

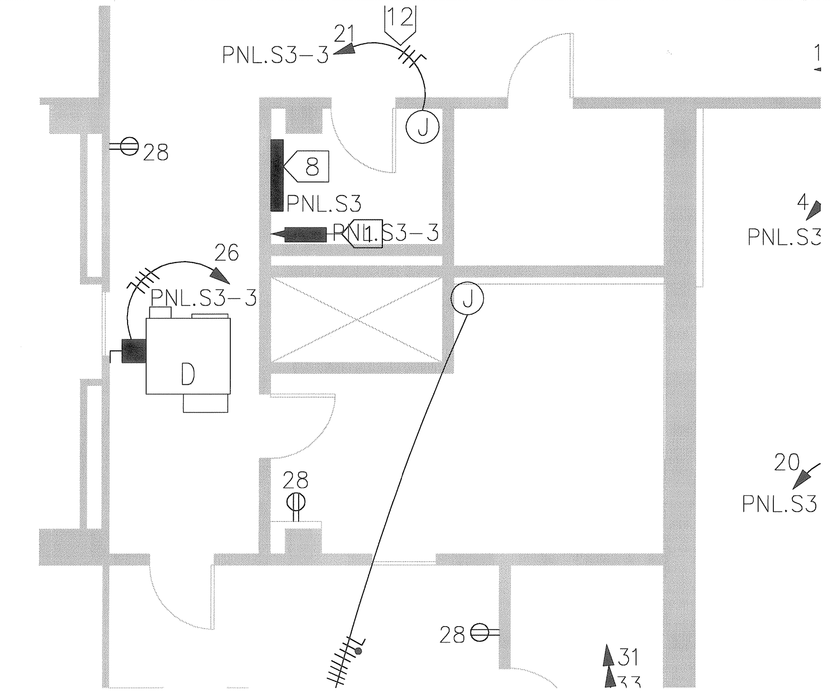

3RD FLOOR ELECTRICAL CLOSET–SOUTH
4 E1.05 SCALE: 1/4"=1'-0"

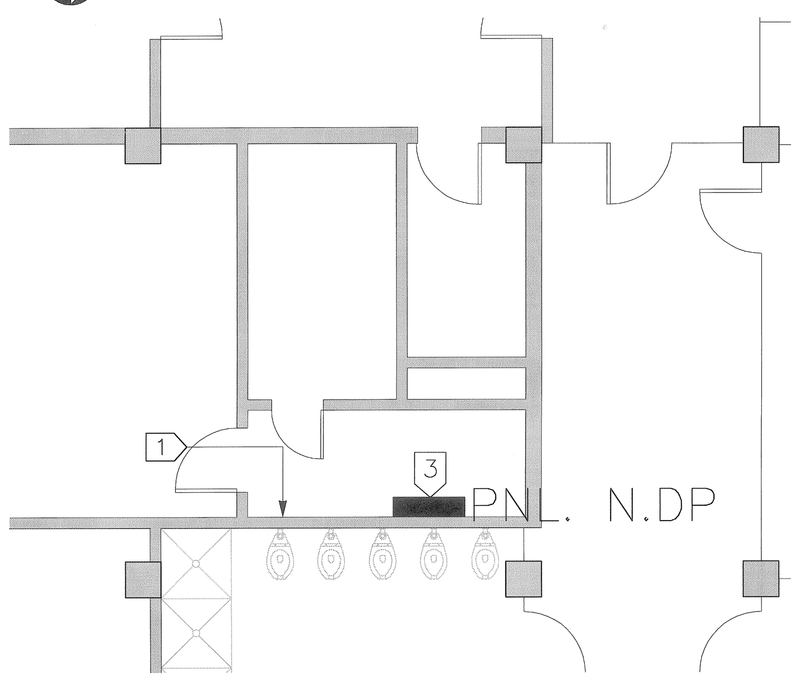

BASEMENT ELECTRICAL CLOSET–NORTH
5 E1.05 SCALE: 1/4"=1'-0"

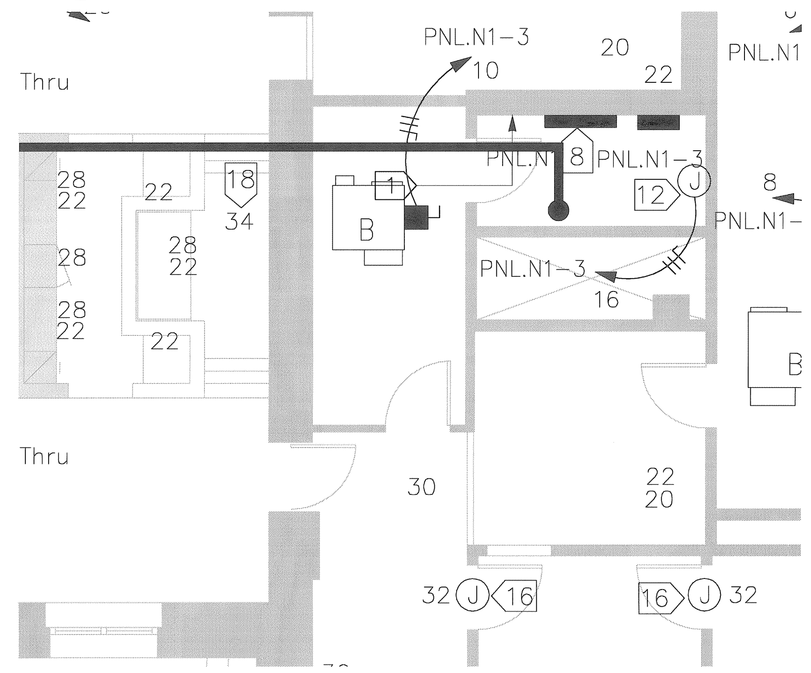

1ST FLOOR ELECTRICAL CLOSET–NORTH
6 E1.05 SCALE: 1/4"=1'-0"

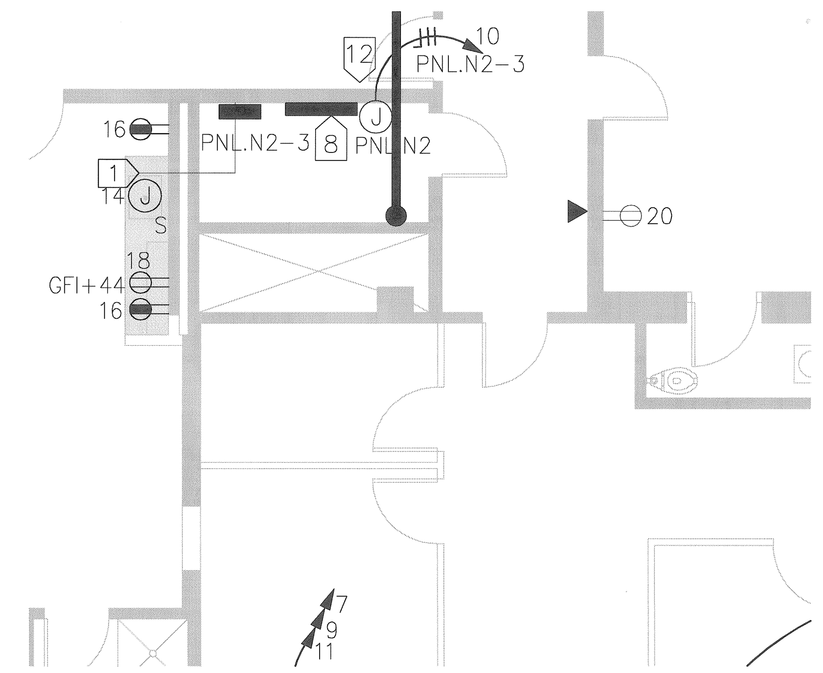

2ND FLOOR ELECTRICAL CLOSET–NORTH
7 E1.05 SCALE: 1/4"=1'-0"

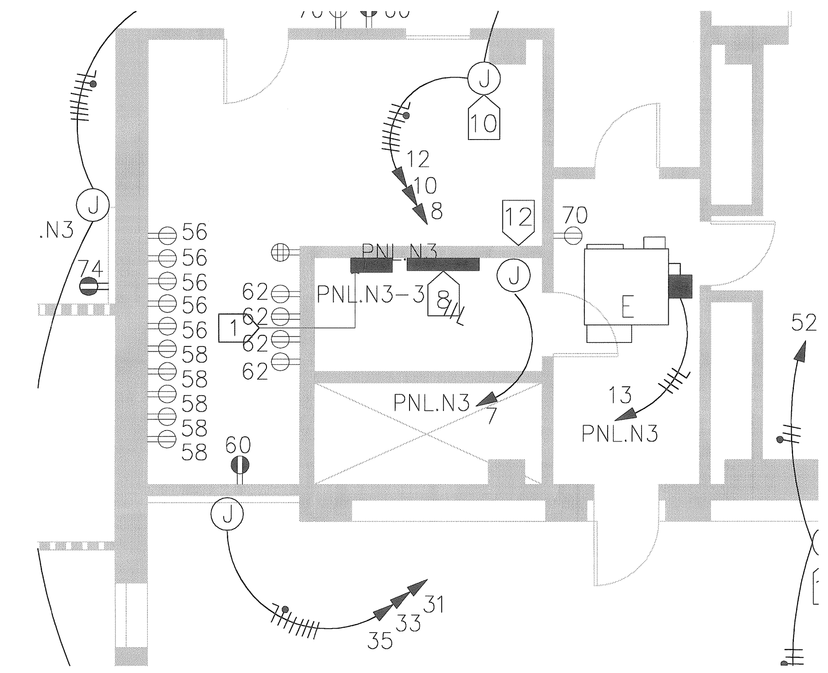

3RD FLOOR ELECTRICAL CLOSET–NORTH
8 E1.05 SCALE: 1/4"=1'-0"

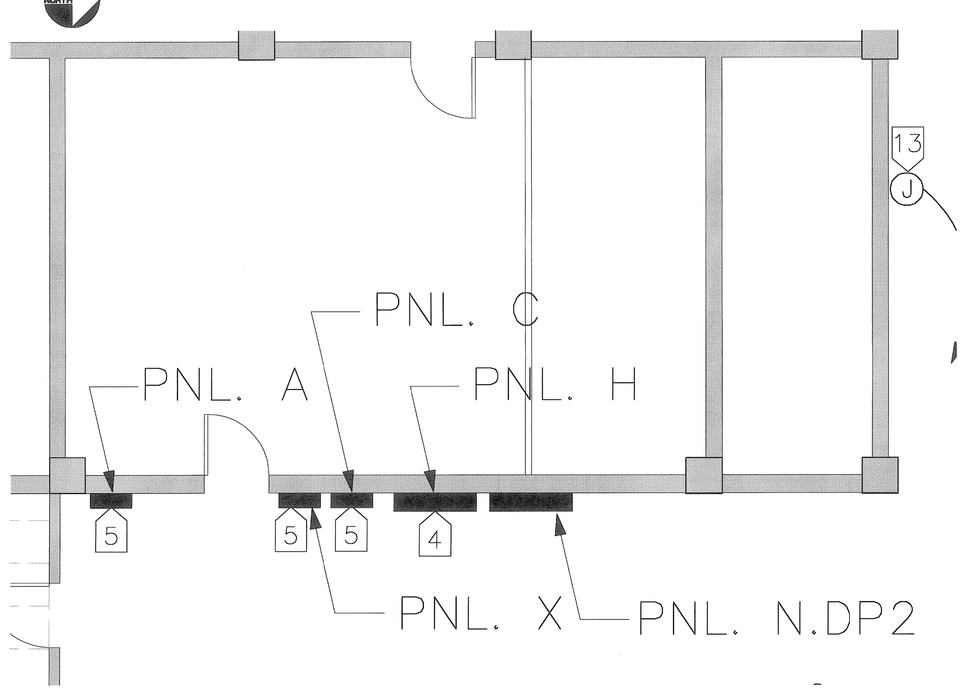

BASEMENT ELECTRICAL CLOSET–CENTER
9 E1.05 SCALE: 1/4"=1'-0"

POWER NOTES:

1 COURT SHALL MAKE WALL IN ELECTRICAL/TELECOM ROOM FULLY ACCESSABLE FOR ELECTRICAL EQUIPMENT. WALL SHALL BE FREE FROM PA, IT AND TELEPHONE EQUIPMENT.

Interior Improvements to DC Superior Courts Building 'B'

409 E Street, NW
Washington, DC 20001

U.S. General Services Administration
301 7th Street, SW, Room 2021
Washington, DC 20407

LEO A DALY
1201 Connecticut Ave, NW
Washington DC 20036 USA
Tel 202-861-4600 Fax 202-872-8530

Dalco
10005 Old Columbia Road Suite L261
Columbia, MD 21046
Tel: 410-290-8827
Fax: 410-290-8812

Contractor
Address

KEY PLAN

ISSUES / REVISIONS

NO.	DESCRIPTION	DATE

FILE LOG

ACTIVITY	REFERENCE	BY
Manager		KSL
Design		MA
Draw		MCV
Draw		
Draw		LAYOUT
Check		KA

REGISTRATION

JOB No 52010300

CONSTRUCTION PACKAGE

ISSUED FOR CONSTRUCTION (FINAL) APRIL 8, 2003

ELECTRICAL CLOSETS

E1.05

© Leo A Daly Company 2003

UNLESS OTHERWISE NOTED ALL NON EMERGENCY BRANCH CIRCUITS INDICATED IN THIS AREA SHALL BE CONNECTED TO PANEL "C" AND ALL LIFE SAFETY CIRCUITS SHALL BE CONNECTED TO PANEL ELB

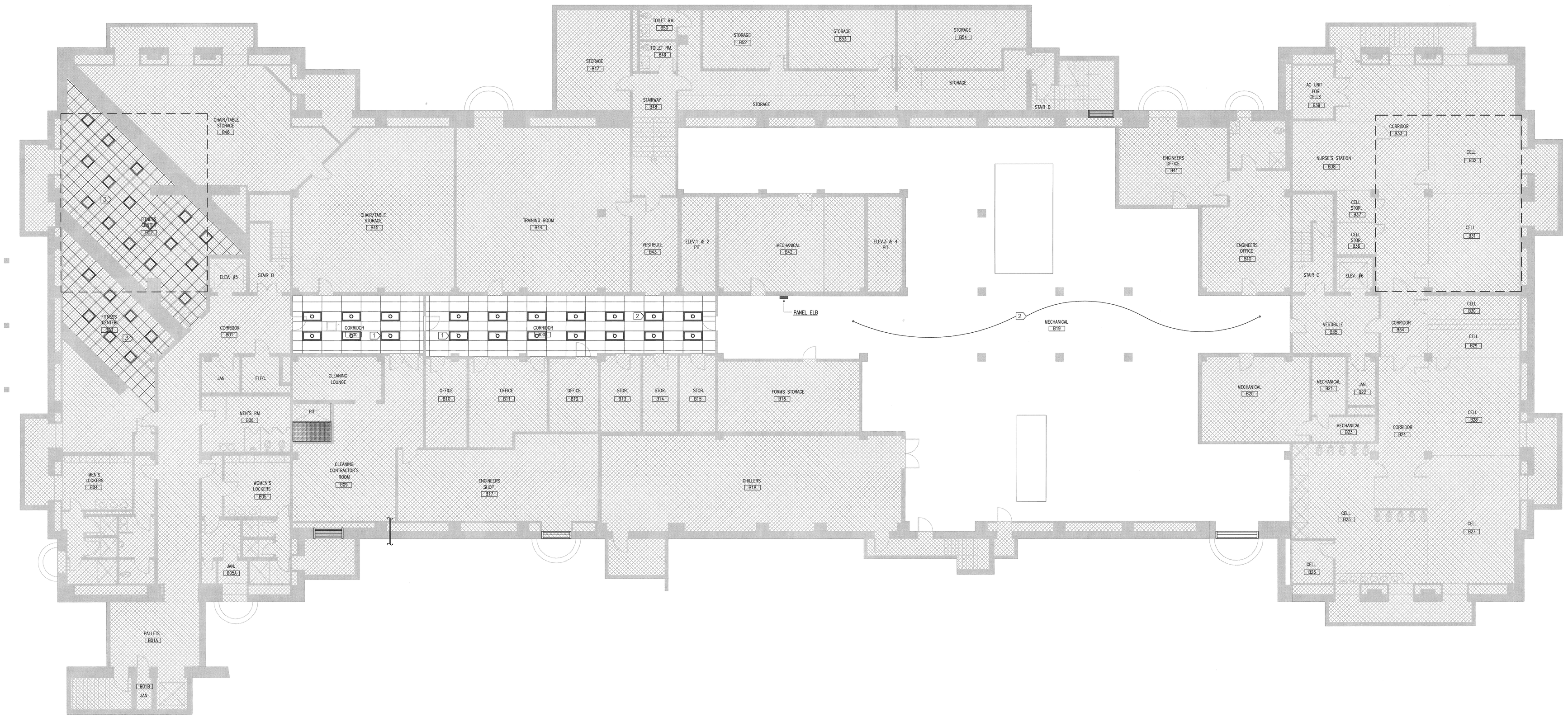

1 LIGHTING PLAN–BASEMENT
E2.00 SCALE: 1/8"=1'-0"

NORTH

GENERAL LIGHTING NOTES:

1. EXISTING 2'X4' RECESSED LIGHTING FIXTURES ARE SHOWN AS REFERENCE, REMOVE, STORE AND RE–INSTALL ALL LIGHTING FIXTURES AS REQUIRED, AS TO FACILATE THE NEW MECH. REQUIREMENTS.

2. RE–CONFIGURE EXISTING LIGHTING FIXTURES IN THIS AREA TO SUPPORT EXISTING/NEW EQUIPMENT. ADD ADDITIONAL LIGHTING FIXTURES (MATCHING EXISTING) AS REQUIRED TO PROVIDE LIGHTING LEVELS OF 15fc MIN. @ THE BASE OF EQUIPMENT.

3. EXISTING LIGHTING FIXTURES ARE SHOWN AS REFERENCE, REMOVE, STORE AND RE–INSTALL ALL LIGHTING FIXTURES.

Interior Improvements to DC Superior Courts Building 'B'

409 E Street, NW
Washington, DC 20001

U.S. General Services Administration
301 7th Street, SW, Room 2021
Washington, DC 20407

LEO A DALY
PLANNING ARCHITECTURE ENGINEERING INTERIORS
EST. 1915
1201 Connecticut Ave, NW
Washington DC 20036 USA
Tel 202-861-4600 Fax 202-872-8530

Dalco INCORPORATED
10005 Old Columbia Road Suite L261
Columbia, MD 21046
Tel: 410-290-8827
Fax: 410-290-8812

Contractor
Address

KEY PLAN

ISSUES / REVISIONS

NO.	DESCRIPTION	DATE

FILE LOG

ACTIVITY	REFERENCE	BY
Manager		KNL
Design		VVPM
Draw		MCY
Draw		
Draw		
Check		KA

REGISTRATION

JOB No 52010300

CONSTRUCTION PACKAGE

ISSUED FOR CONSTRUCTION (FINAL) APRIL 8, 2003

LIGHTING PLAN-BASEMENT

E2.00

© Leo A Daly Company 2003

UNLESS OTHERWISE NOTED ALL NON EMERGENCY BRANCH CIRCUITS INDICATED IN THIS AREA SHALL BE CONNECTED TO PANEL S1 AND ALL LIFE SAFETY CIRCUITS SHALL BE CONNECTED TO PANEL ELB

UNLESS OTHERWISE NOTED ALL NON EMERGENCY BRANCH CIRCUITS INDICATED IN THIS AREA SHALL BE CONNECTED TO PANEL N1 AND ALL LIFE SAFETY CIRCUITS SHALL BE CONNECTED TO PANEL ELB

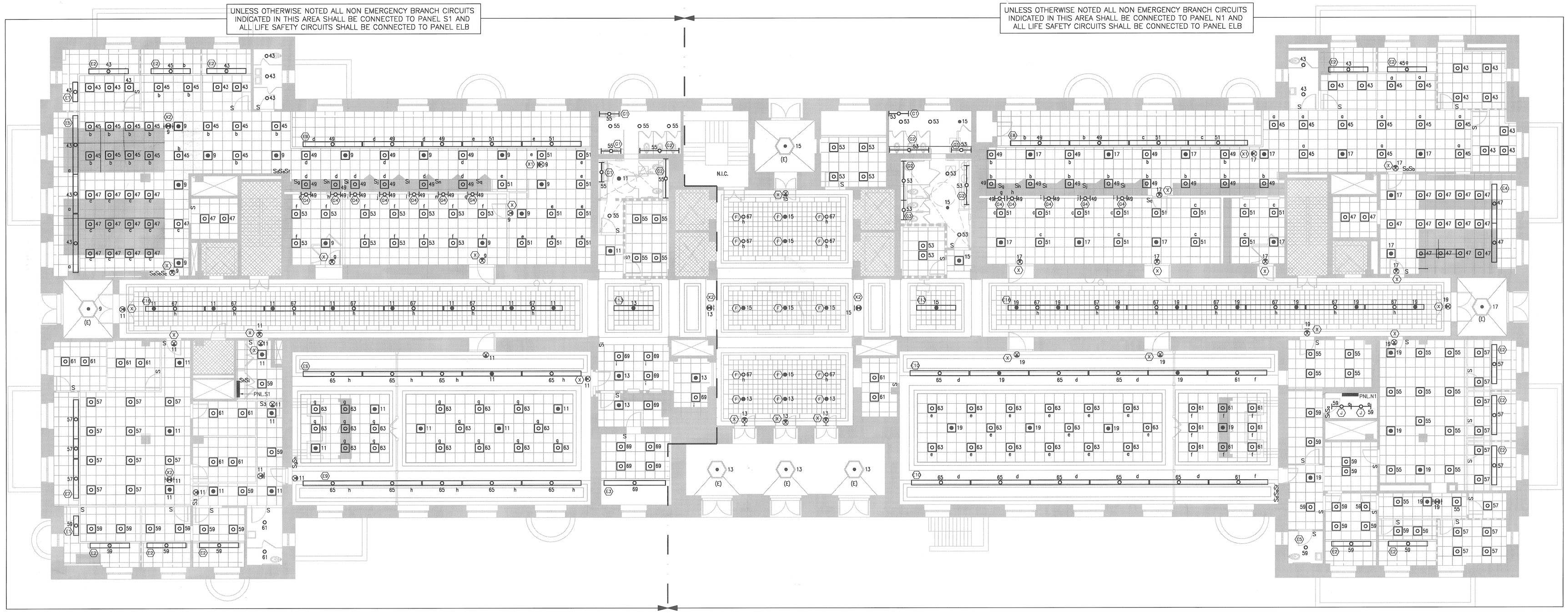

1 / E2.01 LIGHTING PLAN-FIRST FLOOR

SCALE: 1/8"=1'-0"

NORTH

GENERAL LIGHTING NOTES:

1. ALL SWITCH WALL PLATES AND TOGGLE SWITCHES SHALL BE STAINLESS STEEL . ALL TOGGLE SWITCHES SHALL BE SPECIFICATION GRADE. SWITCHES SHALL BE GANGED WHERE POSSIBLE
2. ALL 2' x 2' FLUORESCENT LIGHTING FIXTURE SHALL BE TYPE (C) UNLESS OTHERWISE NOTED
3. CIRCUITS ARE DESIGNATED BY THE NUMBER SHOWN ADJACENT TO EACH LIGHTING FIXTURE OR JUNCTION BOX. WIRING IS ONLY SHOWN UNDER SPECIAL CIRCUMSTANCES. PROVIDE ALL CONDUIT, WIRE AND BOXES AS WELL AS CEILING OUTLETS AND WHIPS REQUIRED TO ENERGIZED LIGHTING FIXTURES AS SHOWN
4. ALL COMPACT FLUORESCENT LIGHTING FIXTURE SHALL BE TYPE (H) UNLESS OTHERWISE NOTED

Interior Improvements to DC Superior Courts Building 'B'

409 E Street, NW
Washington, DC 20001

U.S. General Services Administration
301 7th Street, SW, Room 2021
Washington, DC 20407

LEO A DALY
1201 Connecticut Ave, NW
Washington DC 20036 USA
Tel 202-861-4600 Fax 202-872-8530

Dalco Incorporated
10005 Old Columbia Road Suite L261
Columbia, MD 21046
Tel: 410-290-8827
Fax: 410-290-8812

Contractor
Address

KEY PLAN

ISSUES / REVISIONS

NO.	DESCRIPTION	DATE

FILE LOG

ACTIVITY	REFERENCE	BY
Manager		KSL
Design		MA
Draw		MCY
Draw		
Draw		
Check		KA

REGISTRATION

JOB No 52010300

CONSTRUCTION PACKAGE

ISSUED FOR CONSTRUCTION (FINAL) APRIL 8, 2003

LIGHTING PLAN-FIRST FLOOR

E2.01

© Leo A Daly Company 2003

UNLESS OTHERWISE NOTED ALL NON EMERGENCY BRANCH CIRCUITS INDICATED IN THIS AREA SHALL BE CONNECTED TO PANEL S2 AND ALL LIFE SAFETY CIRCUITS SHALL BE CONNECTED TO PANEL ELB

UNLESS OTHERWISE NOTED ALL NON EMERGENCY BRANCH CIRCUITS INDICATED IN THIS AREA SHALL BE CONNECTED TO PANEL N2 AND ALL LIFE SAFETY CIRCUITS SHALL BE CONNECTED TO PANEL ELB

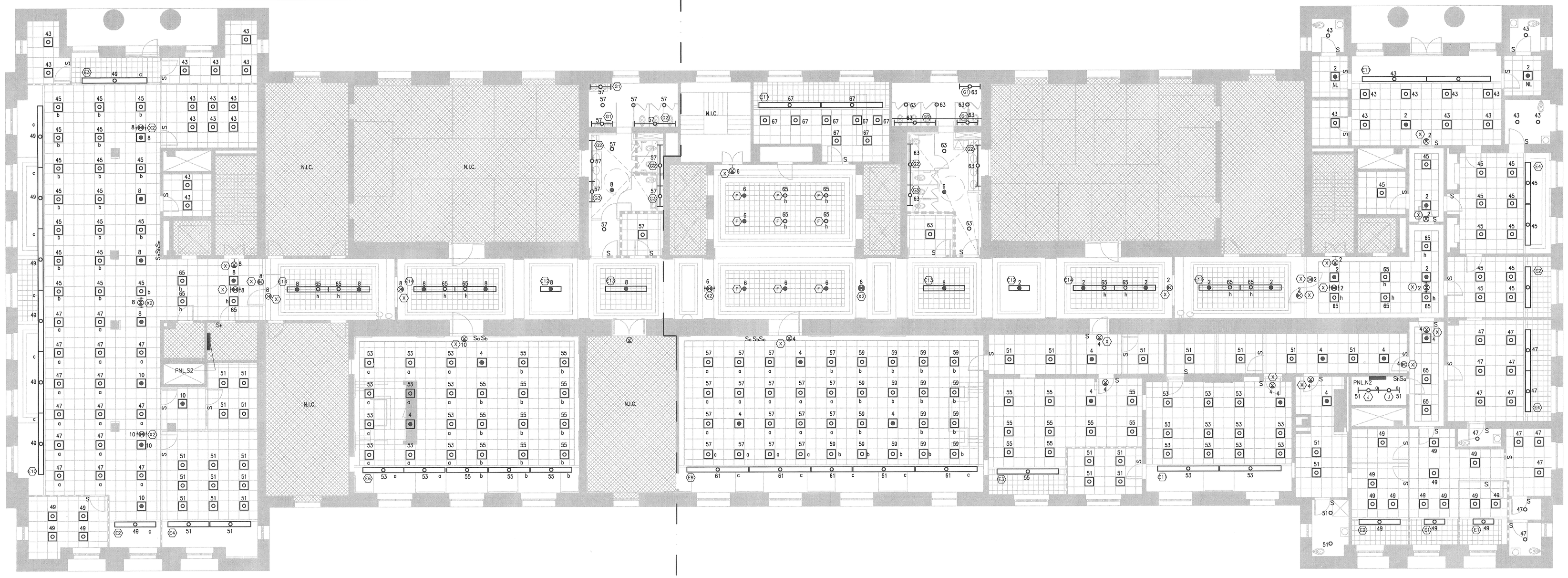

1 / E2.02 LIGHTING PLAN–SECOND FLOOR

SCALE: 1/8"=1'-0"

NORTH

GENERAL LIGHTING NOTES:

1. ALL SWITCH WALL PLATES AND TOGGLE SWITCHES SHALL BE STAINLESS STEEL . ALL TOGGLE SWITCHES SHALL BE SPECIFICATION GRADE. SWITCHES SHALL BE GANGED WHERE POSSIBLE
2. ALL 2' x 2' FLUORESCENT LIGHTING FIXTURE SHALL BE TYPE (C) UNLESS OTHERWISE NOTED
3. CIRCUITS ARE DESIGNATED BY THE NUMBER SHOWN ADJACENT TO EACH LIGHTING FIXTURE OR JUNCTION BOX. WIRING IS ONLY SHOWN UNDER SPECIAL CIRCUMSTANCES. PROVIDE ALL CONDUIT, WIRE AND BOXES AS WELL AS CEILING OUTLETS AND WHIPS REQUIRED TO ENERGIZED LIGHTING FIXTURES AS SHOWN
4. ALL COMPACT FLUORESCENT LIGHTING FIXTURE SHALL BE TYPE (H) UNLESS OTHERWISE NOTED
5. IN ALL AREA'S NOT COVERED IN FIRST TWO PHASES OF THIS PROJECT, PROVIDE REQUIRED BRANCH CIRCUITING FROM EXISTING LIGHTING FIXTURES AND HOME–RUN TO RESPECTIVE LIGHTING AND APPLIANCE PANEL BOARD.

Interior Improvements to DC Superior Courts Building 'B'

409 E Street, NW
Washington, DC 20001

U.S. General Services Administration
301 7th Street, SW, Room 2021
Washington, DC 20407

LEO A DALY
PLANNING ARCHITECTURE ENGINEERING INTERIORS
EST. 1915

1201 Connecticut Ave, NW
Washington DC 20036 USA
Tel 202-861-4600 Fax 202-872-8530

Dalco INCORPORATED
10005 Old Columbia Road Suite L261
Columbia, MD 21046
Tel: 410-290-8827
Fax: 410-290-8812

Contractor
Address

KEY PLAN

ISSUES / REVISIONS

NO.	DESCRIPTION	DATE

FILE LOG

ACTIVITY	REFERENCE	BY
Manager		KSL
Design		MA
Draw		MCV
Draw		
Draw		
Check		KA

REGISTRATION

JOB No 52010300

CONSTRUCTION PACKAGE

ISSUED FOR CONSTRUCTION (FINAL) APRIL 8, 2003

LIGHTING PLAN-SECOND FLOOR

E2.02

© Leo A Daly Company 2003

UNLESS OTHERWISE NOTED ALL NON EMERGENCY BRANCH CIRCUITS INDICATED IN THIS AREA SHALL BE CONNECTED TO PANEL S3 AND ALL LIFE SAFETY CIRCUITS SHALL BE CONNECTED TO PANEL ELB

UNLESS OTHERWISE NOTED ALL NON EMERGENCY BRANCH CIRCUITS INDICATED IN THIS AREA SHALL BE CONNECTED TO PANEL N3 AND ALL LIFE SAFETY CIRCUITS SHALL BE CONNECTED TO PANEL ELB

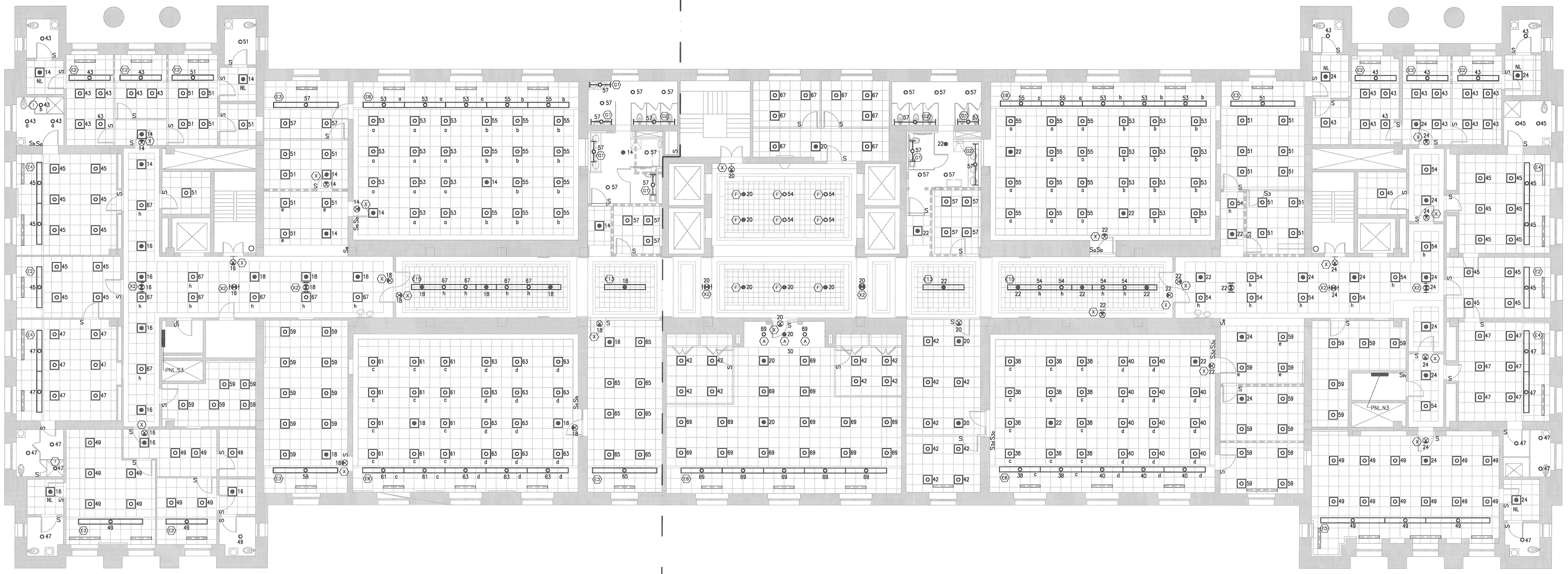

1 / E2.03 LIGHTING PLAN–THIRD FLOOR

SCALE: 1/8"=1'-0"

NORTH

GENERAL LIGHTING NOTES:

1. ALL SWITCH WALL PLATES AND TOGGLE SWITCHES SHALL BE STAINLESS STEEL . ALL TOGGLE SWITCHES SHALL BE SPECIFICATION GRADE. SWITCHES SHALL BE GANGED WHERE POSSIBLE
2. ALL 2' x 2' FLUORESCENT LIGHTING FIXTURE SHALL BE TYPE (C) UNLESS OTHERWISE NOTED
3. CIRCUITS ARE DESIGNATED BY THE NUMBER SHOWN ADJACENT TO EACH LIGHTING FIXTURE OR JUNCTION BOX. WIRING IS ONLY SHOWN UNDER SPECIAL CIRCUMSTANCES. PROVIDE ALL CONDUIT, WIRE AND BOXES AS WELL AS CEILING OUTLETS AND WHIPS REQUIRED TO ENERGIZED LIGHTING FIXTURES AS SHOWN
4. ALL COMPACT FLUORESCENT LIGHTING FIXTURE SHALL BE TYPE (H) UNLESS OTHERWISE NOTED
5. IN ALL AREA'S NOT COVERED IN FIRST TWO PHASES OF THIS PROJECT, PROVIDE REQUIRED BRANCH CIRCUITING FROM EXISTING LIGHTING FIXTURES AND HOME-RUN TO RESPECTIVE LIGHTING AND APPLIANCE PANEL BOARD.

Interior Improvements to DC Superior Courts Building 'B'

409 E Street, NW
Washington, DC 20001

GSA U.S. General Services Administration
301 7th Street, SW, Room 2021
Washington, DC 20407

LEO A DALY PLANNING ARCHITECTURE ENGINEERING INTERIORS EST. 1915
1201 Connecticut Ave, NW
Washington DC 20036 USA
Tel 202-861-4600 Fax 202-872-8530

Dalco INCORPORATED
10005 Old Columbia Road Suite L261
Columbia, MD 21046
Tel: 410-290-8827
Fax: 410-290-8812

Contractor
Address

KEY PLAN

ISSUES / REVISIONS

NO.	DESCRIPTION	DATE

FILE LOG

ACTIVITY	REFERENCE	BY
Manager		KNL
Design		MA
Draw		MCY
Draw		
Draw		
Check		KA

REGISTRATION

JOB No 52010300

CONSTRUCTION PACKAGE

ISSUED FOR CONSTRUCTION (FINAL) APRIL 8, 2003

LIGHTING PLAN-THIRD FLOOR

E2.03

© Leo A Daly Company 2003

UNLESS OTHERWISE NOTED ALL NON EMERGENCY BRANCH CIRCUITS INDICATED IN THIS AREA SHALL BE CONNECTED TO PANEL S3

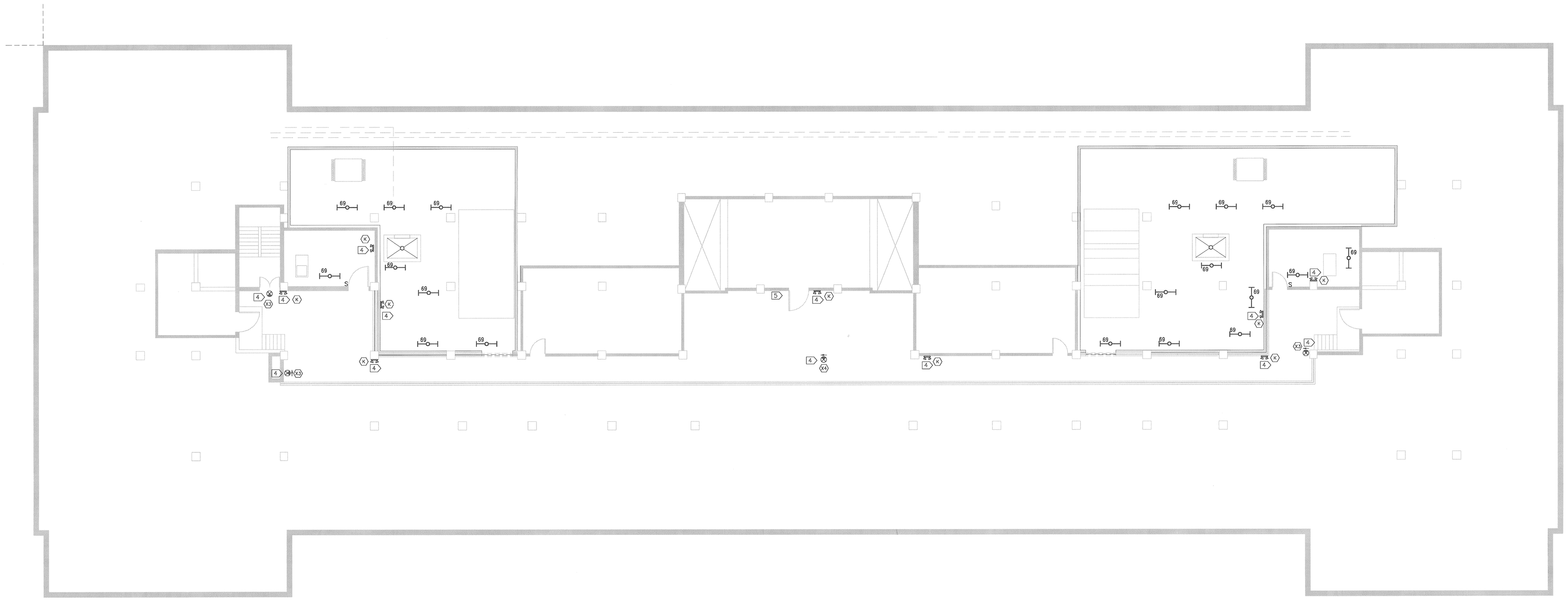

1 / E2.AT LIGHTING PLAN–ATTIC

SCALE: 1/8"=1'–0"

NORTH

GENERAL LIGHTING NOTES:

1. ALL SWITCH WALL PLATES AND TOGGLE SWITCHES SHALL BE STAINLESS STEEL . ALL TOGGLE SWITCHES SHALL BE SPECIFICATION GRADE. SWITCHES SHALL BE GANGED WHERE POSSIBLE
2. ALL FLUORESCENT LIGHTING FIXTURE SHALL BE TYPE (J) UNLESS OTHERWISE NOTED
3. CIRCUITS ARE DESIGNATED BY THE NUMBER SHOWN ADJACENT TO EACH LIGHTING FIXTURE OR JUNCTION BOX. WIRING IS ONLY SHOWN UNDER SPECIAL CIRCUMSTANCES. PROVIDE ALL CONDUIT, WIRE AND BOXES AS WELL AS CEILING OUTLETS AND WHIPS REQUIRED TO ENERGIZED LIGHTING FIXTURES AS SHOWN
4. IN ALL AREA'S NOT COVERED IN FIRST TWO PHASES OF THIS PROJECT, PROVIDE REQUIRED BRANCH CIRCUITING FROM EXISTING LIGHTING FIXTURES AND HOME–RUN TO RESPECTIVE LIGHTING AND APPLIANCE PANEL BOARD.
5. THE ADDITIONAL EMERGENCY LIGHTING SHOWN IN ATTIC SHALL BE SUPPORTED FROM EXISTING BRANCH CIRCUIT LOCATED AT ELEVATOR MACH. ROOM.

Interior Improvements to DC Superior Courts Building 'B'

409 E Street, NW
Washington, DC 20001

U.S. General Services Administration
301 7th Street, SW, Room 2021
Washington, DC 20407

LEO A DALY
PLANNING ARCHITECTURE ENGINEERING INTERIORS
EST. 1915

1201 Connecticut Ave, NW
Washington DC 20036 USA
Tel 202-861-4600 Fax 202-872-8530

Dalco INCORPORATED
10005 Old Columbia Road Suite L261
Columbia, MD 21046
Tel: 410-290-8827
Fax: 410-290-8812

Contractor
Address

KEY PLAN

ISSUES / REVISIONS

NO.	DESCRIPTION	DATE

FILE LOG

ACTIVITY	REFERENCE	BY
Manager		KSL
Design		MA
Draw		MCY
Draw		
Draw		
Check		KA

REGISTRATION

JOB No 52010300

CONSTRUCTION PACKAGE

ISSUED FOR CONSTRUCTION (FINAL) APRIL 8, 2003

LIGHTING PLAN-ATTIC

E2.04

© Leo A Daly Company 2003

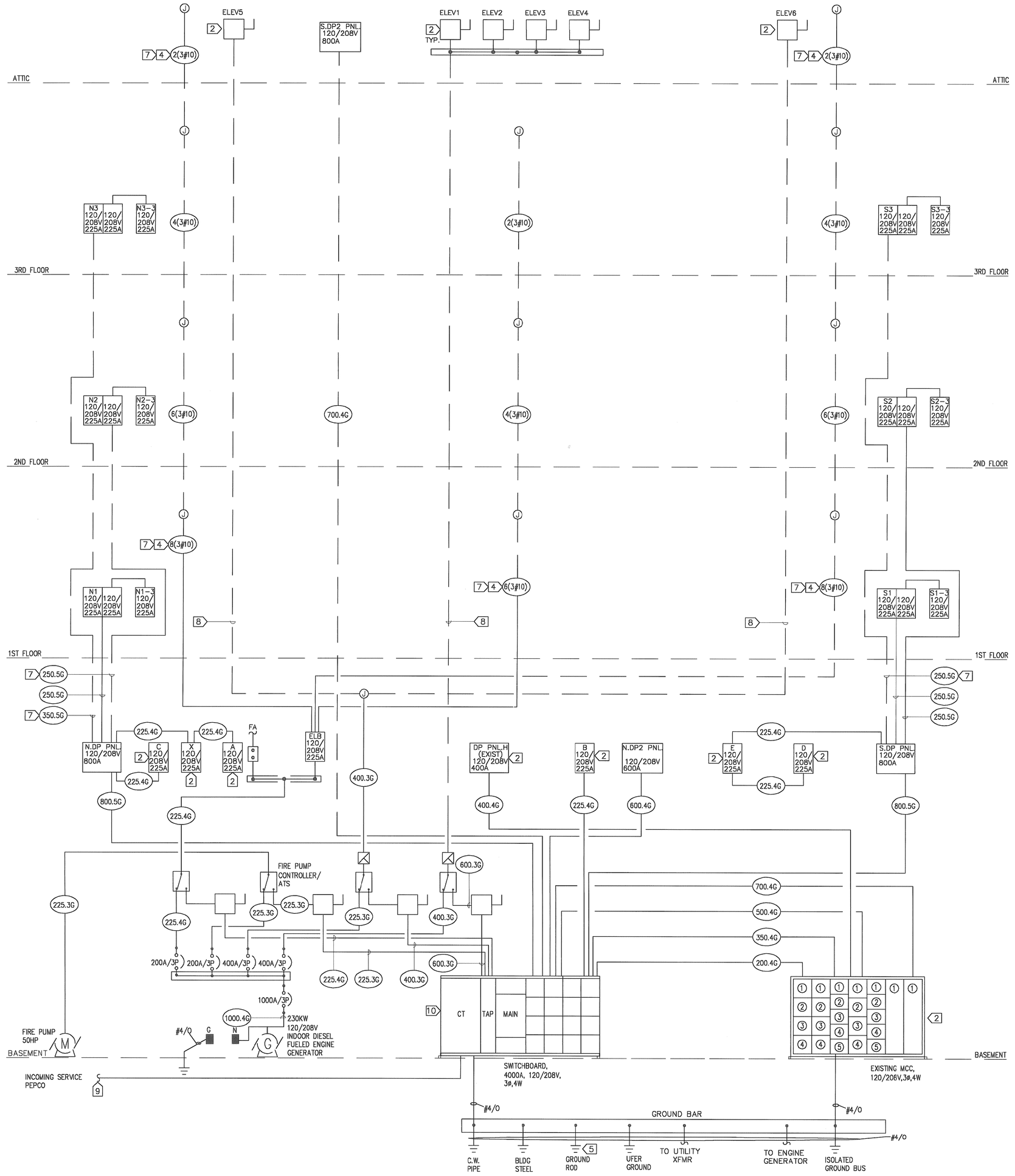

1 POWER RISER DIAGRAM
E3.01 SCALE: NOT TO SCALE

GENERAL NOTES

1. INSTALLATION OF NEW ELECTRICAL EQUIPMENT SHALL BE PERFORMED TO ASSURE MINIMUM OUTAGES TO THE FACILITIES.

POWER RISER NOTES

1. EQUIPMENT AND DEVICE ARE NEW UNLESS NOTED OTHERWISE.
2. EXISTING EQUIPMENT AND DEVICE TO REMAIN UNLESS NOTED OTHERWISE.
3. SEE ONE-LINE DIAGRAM AND PANEL SCHEDULES FOR MORE DETAILS.
4. THE FIRST NUMBER INDICATES NUMBER OF EMERGENCY CIRCUITS AND THE SECOND AND THIRD NUMBERS INDICATE WIRING SIZES AND NUMBER OF WIRES PER CIRCUIT RESPECTIVELY. DERATE CONDUCTORS AND INCREASE SIZE PER NEC IF MORE THAN THREE CIRCUITS ARE INSTALLED IN ONE RACEWAY.
5. SEE GROUNDING ROD DETAIL BELOW.
6. ALL FEEDERS AND CONDUIT ARE NEW UNLESS NOTED OTHERWISE.
7. EXISTING CONDUIT COULD BE UTILIZED FOR THE NEW WORK IF IT MEETS NEW WIRING.
8. EXISTING FEEDER AND CONDUIT TO REMAIN.
9. PROVIDE ALL NECESSARY CABLES AND DUCT BANK ACCORDING TO PEPCO'S REQUIRMENT.
10. CT CABINET AND SERVICE EQUIPMENT SHALL MEET UTILITY'S SPECIFICATIONS.

FEEDER SCHEDULE

KEY	3PH+G	KEY	3PH+N+G
	CONDUCTORS, AND CONDUIT		CONDUCTORS, AND CONDUIT
20.3G	3#12,1#12G, 3/4"	20.4G	4#12,1#12G, 3/4"
30.3G	3#10,1#10G, 3/4"	30.4G	4#10,1#10G, 3/4"
40.3G	3#8,1#10G, 1"	40.4G	4#8,1#10G, 1"
50.3G	3#6,1-#10G, 1"	50.4G	4#6,1-#10G, 1-1/4"
60.3G	3#4,1#10G, 1-1/4"	60.4G	4#4,1#10G, 1-1/4"
70.3G	3#4,1#8G, 1-1/4"	70.4G	4#4,1#8G, 1-1/4"
80.3G	3#2,1-#8G, 1-1/4"	80.4G	4#2,1-#8G, 1-1/4"
90.3G	3#2,1#8G, 1-1/4"	90.4G	4#2,1#8G, 1-1/2"
100.3G	3#2,1#8G, 1-1/4"	100.4G	4#1,1#8G, 1-1/2"
110.3G	3#1,1#6G, 1-1/2"	110.4G	4#1,1#6G, 2"
125.3G	3#1/0,1#6G, 1-1/2"	125.4G	4#1/0,1#6G, 2"
150.3G	3#1/0,1#6G, 1-1/2"	150.4G	4#1/0,1#6G, 2"
175.3G	3#2/0,1#6G, 2"	175.4G	4#2/0,1#6G, 2"
200.3G	3#3/0,1#6G, 2"	200.4G	4#3/0,1#6G, 2"
225.3G	3#4/0,1#4G, 2"	225.5G	4#4/0,1#4 IG+1#4 G, 2-1/2"
250.3G	3-250,1#4G, 2-1/2"	225.4G	4#4/0,1#4G, 2-1/2"
300.3G	3-350,1#4G, 3"	250.4G	4-250,1#4G, 3"
350.3G	3-500,1#3G, 3"	250.5G	4-250,1#4 IG+1#4 G, 3"
400.3G	2[3#3/0,1#3G, 2"]	300.4G	4-350,1#4G, 3"
450.3G	2[3#4/0,1#2/0G, 2"]	350.4G	4-500,1#3G, 3"
500.3G	2[3-250,1#2G, 2-1/2"]	400.4G	2[4#3/0,1#3G, 2-1/2]
600.3G	2[3-350,1#1G, 3"]	450.4G	2[4#4/0,1#2G, 2-1/2]
700.3G	2[3-500,1#1/0G, 3"]	500.4G	2[4-250,1#2G, 3]
800.3G	3[3-300,1#1/0G, 2-1/2"]	600.4G	2[4-350,1#1G, 3]
1000.3G	3[3-400,1#2/0G, 3"]	700.4G	2[4-500,1#1/0G, 3-1/2]
1200.3G	4[3-350,1#3/0G, 3"]	800.4G	3[4-300,1#1/0 G, 3"]
1600.3G	5[3-400,1#4/0G, 3"]	800.5G	3[4-300,1#1/0 IG+1#1/0 G, 3"]
2000.3G	6[3-400,1#250G, 3"]	1000.4G	3[4-500,1#2/0G, 3-1/2"]
2500.3G	7[3-500,1#350G, 3"]	1200.4G	4[4-350,1#3/0G, 3"]
3000.3G	8[3-500,1#400G, 3-1/2"]	1600.4G	5[4-500,1#4/0G, 3-1/2"]
4000.3G	11[3-500,1#500G, 3-1/2"]	2000.4G	6[4-500,1#250G, 3-1/2"]
		2500.4	7[4-500, 3-1/2"]
		3000.4	8[4-500+1#500G, 3-1/2"]

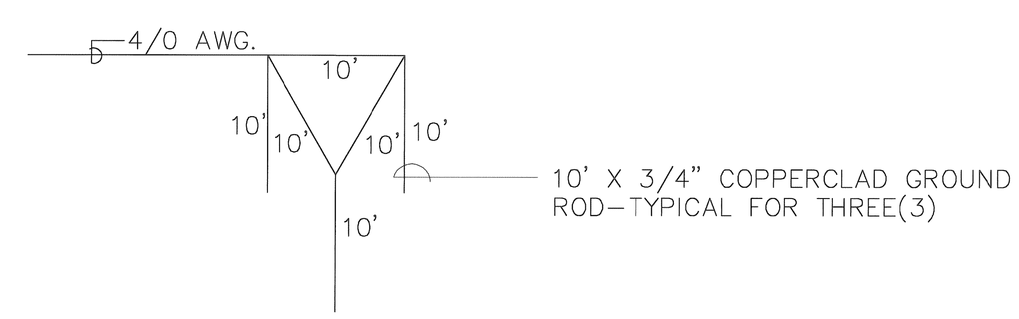

2 GROUNDING ROD DETAIL
E3.01 SCALE: NOT TO SCALE

Interior Improvements to DC Superior Courts Building 'B'

409 E Street, NW
Washington, DC 20001

U.S. General Services Administration
301 7th Street, SW, Room 2021
Washington, DC 20407

LEO A DALY
PLANNING ARCHITECTURE ENGINEERING INTERIORS
EST. 1915
1201 Connecticut Ave, NW
Washington DC 20036 USA
Tel 202-861-4600 Fax 202-872-8530

Dalco INCORPORATED
10005 Old Columbia Road Suite L261
Columbia, MD 21046
Tel: 410-290-8827
Fax: 410-290-8812

Contractor
Address

KEY PLAN

ISSUES / REVISIONS

NO.	DESCRIPTION	DATE

FILE LOG

ACTIVITY	REFERENCE	BY
Manager		KSL
Design		MA
Draw		MCY
Draw		
Draw		
Check		KA

REGISTRATION

JOB No 52010300

CONSTRUCTION PACKAGE

ISSUED FOR CONSTRUCTION (FINAL) APRIL 8, 2003

POWER RISER DIAGRAM

E3.01

© Leo A Daly Company 2003

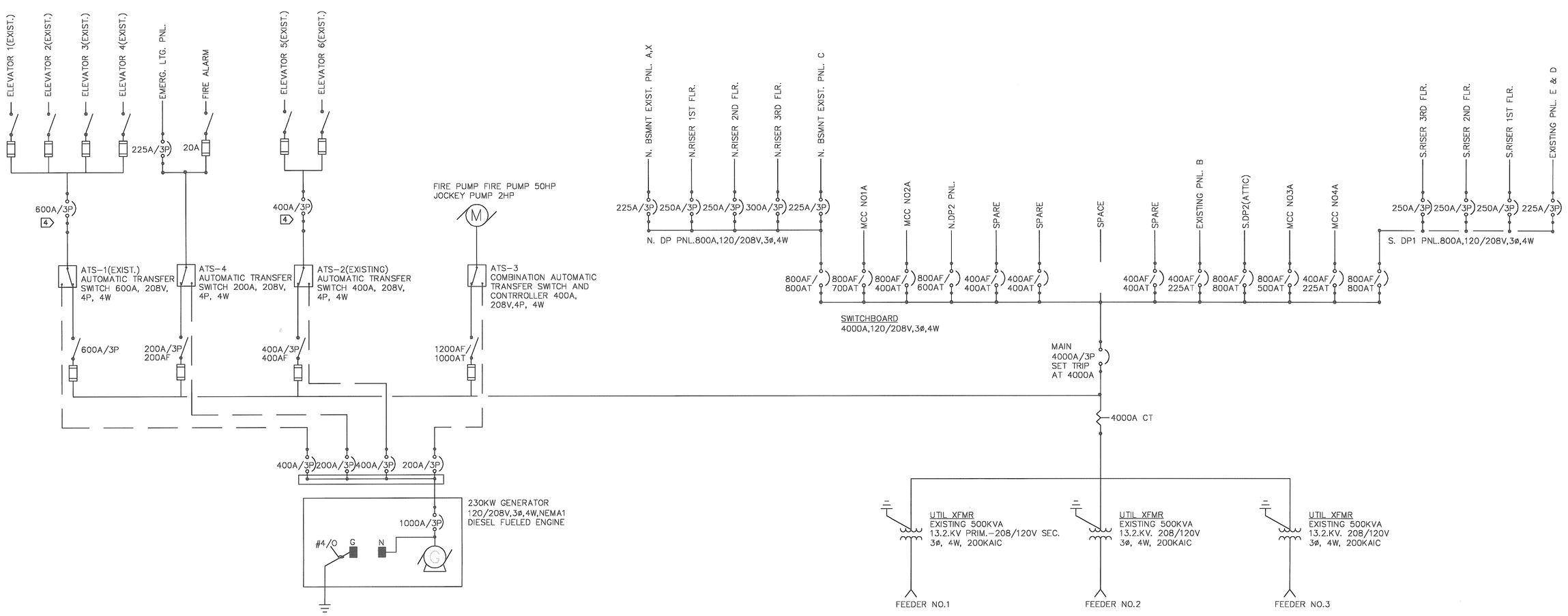

ONE LINE DIAGRAM
NOT TO SCALE

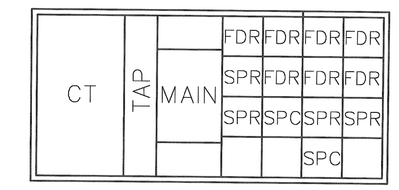

SWITCHBOARD ELEVATION
SCALE: 1/4"=1'-0"

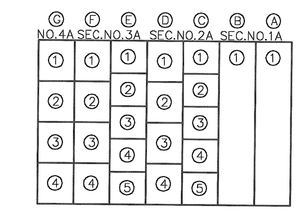

EXISTING MCC ELEVATION
SCALE: 1/4"=1'-0"

1 E3.02 ONE LINE AND ELEVATION DIAGRAMS
SCALE: NOT TO SCALE

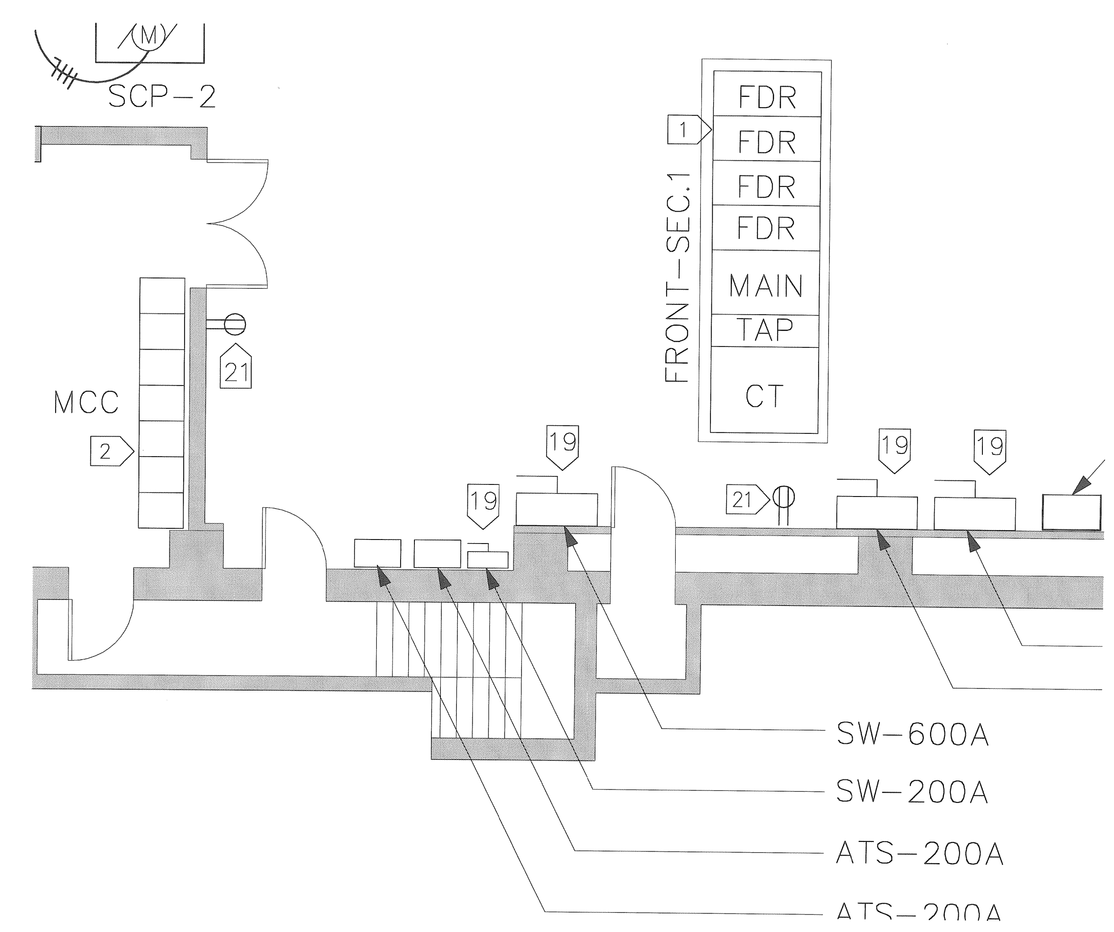

2 E3.02 MAIN ELECTRICAL EQUIPMENT ROOM-BASEMENT
SCALE: 1/4"=1'-0"

ONE-LINE DIAGRAM NOTES:

1. EQUIPMENT IS NEW UNLESS NOTED OTHERWISE.
2. RATING OF ALL CIRCUIT BREAKERS SHALL MATCH COORDINATION AND FAULT CURRENT STUDIES.
3. INCOMING SERVICE EQUIPMENT, ALL ASSOCIATED CABLES AND CONDUITS SHALL MEET UTILITY'S GUIDELINES.
4. PROVIDE SHUNT TRIP FOR FIRE ALARM CONNECTION.

EXISTING MCC NOTES:

1. DEVICES IN EACH COMPARTMENT SHALL REMAIN UNLESS NOTED OTHERWISE.

EXISTING MCC SCHEDULE:

Ⓐ SECTION NO.1A-A
① CHILLER NO.1: 100HP, 208V,3-POLE

Ⓑ SECTION NO.1A-B
① CHILLER NO.2: 100HP, 208V,3-POLE

Ⓒ SECTION NO.2A-C
① COOLING TOWER NORTH: 25HP, 208V,3-POLE
② COOLING TOWER SOUTH: 25HP, 208V,3-POLE
③ CONTROL COMPRESSOR: 5HP, 208V,3-POLE
④ CONTROL COMPRESSOR: 5HP, 208V,3-POLE
⑤ SPARE : 5HP, 208V,3-POLE

Ⓓ SECTION NO.2A-D
① AIR HANDLING 5: 7.5HP, 208V,3-POLE
② SPARE :15HP, 208V,3-POLE
③ CONDENSER PUMP P-1: 15HP, 208V,3-POLE
④ CONDENSER PUMP P-2: 15HP, 208V,3-POLE

Ⓔ SECTION NO.3A-E
① SPARE : 5HP, 208V,3-POLE
② SPARE :10HP, 208V,3-POLE
③ DOMESTIC WATER: 7.5HP, 208V,3-POLE
④ DOMESTIC WATER: 2HP, 208V,3-POLE
⑤ SPARE : 10HP, 208V,3-POLE

Ⓕ SECTION NO.3A-F
① SPARE :25HP, 208V,3-POLE
② SPARE :25HP, 208V,3-POLE
③ PUMP P-3 :20HP, 208V,3-POLE
④ PUMP P-4 :20HP, 208V,3-POLE

Ⓖ SECTION NO.4A-G
① SPARE :25HP, 208V,3-POLE
② SPARE :5HP, 208V, 3-POLE
③ SPARE :10HP, 208V,3-POLE
④ SPACE

Interior Improvements to DC Superior Courts Building 'B'

409 E Street, NW
Washington, DC 20001

U.S. General Services Administration
301 7th Street, SW, Room 2021
Washington, DC 20407

LEO A DALY
PLANNING ARCHITECTURE ENGINEERING INTERIORS
EST. 1915
1201 Connecticut Ave, NW
Washington DC 20036 USA
Tel 202-861-4600 Fax 202-872-8530

Dalco INCORPORATED
10005 Old Columbia Road Suite L261
Columbia, MD 21046
Tel: 410-290-8827
Fax: 410-290-8812

Contractor
Address

KEY PLAN

ISSUES / REVISIONS

NO.	DESCRIPTION	DATE

FILE LOG

ACTIVITY	REFERENCE	BY
Manager		KSL
Design		MA
Draw		MCV
Draw		
Draw		
Check		KA
REGISTRATION		

JOB No 52010300

CONSTRUCTION PACKAGE

ISSUED FOR CONSTRUCTION (FINAL) APRIL 8, 2003

ONE LINE DIAGRAM

E3.02

© Leo A Daly Company 2003